NOTES:

1. FOR GRAVITY APPLICATIONS ONLY.
2. ALL PROCEPTOR UNITS ARE MANUFACTURED WITH FIBERGLASS REINFORCED PLASTICS; PHYSICAL CHARACTERISTICS: ISOPHTHALIC POLYESTER RESIN WITH E GLASS.
3. ALL PROCEPTOR UNITS ARE TO BE INSTALLED IN ACCORDANCE WITH THE MANUFACTURERS INSTALLATION INSTRUCTION.
4. STANDARD PIPING IS SCH. 40 PVC.
5. GMC/OMC 4,000 - 10,000 UNITS COME STANDARD WITH 6" INLET AND OUTLET (OTHER CUSTOM SIZES AVAILABLE AT EXTRA CHARGE).
6. ADVISE GREEN TURTLE OF INVERT DEPTH; DEEP INSTALLATIONS MAY REQUIRE CUSTOM REINFORCEMENT.
7. EXTENSION COLLAR TO BE ORDERED TO MEET FINISHED GRADE, CUT ON SITE FOR FINAL ADJUSTMENT, AND CAULKED WITH SIKAFLEX BY CONTRACTOR FOR WATERTIGHT SEAL.
8. COVERS AVAILABLE FOR H20 TRAFFIC LOADING, PEDESTRIAN LOADING OR ABOVE GROUND INSTALLATION.
9. CONSULT GREEN TURTLE FOR OTHER SIZES.
10. 30 YEAR WARRANTY AGAINST LEAKS, AND STRUCTURAL FAILURE.
11. U.S. PATENT #5,746,912; CDN PATENT #2,195,822

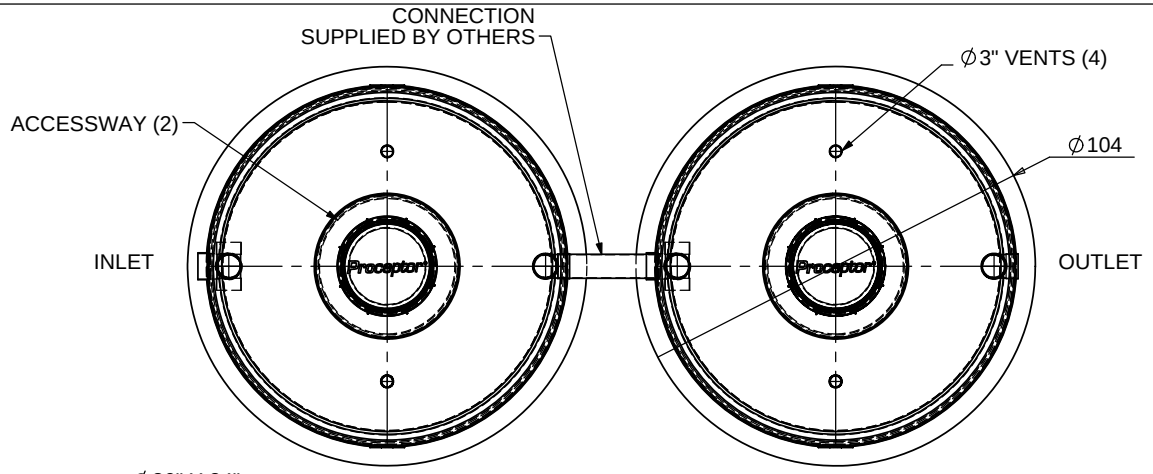

TOP VIEW

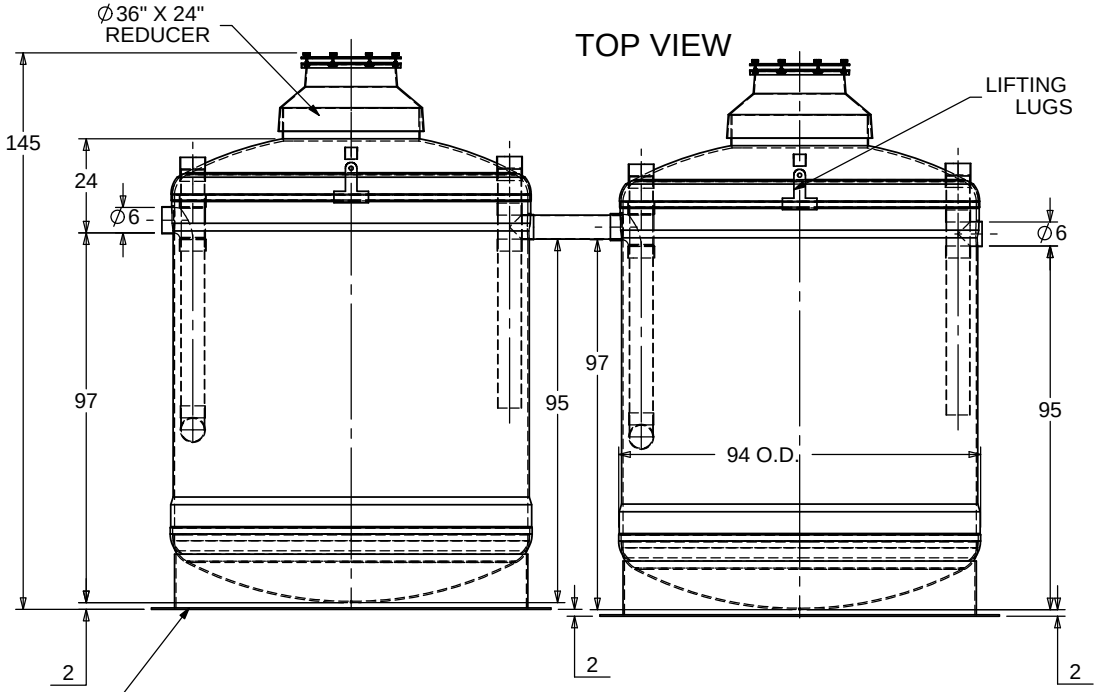

SIDE VIEW

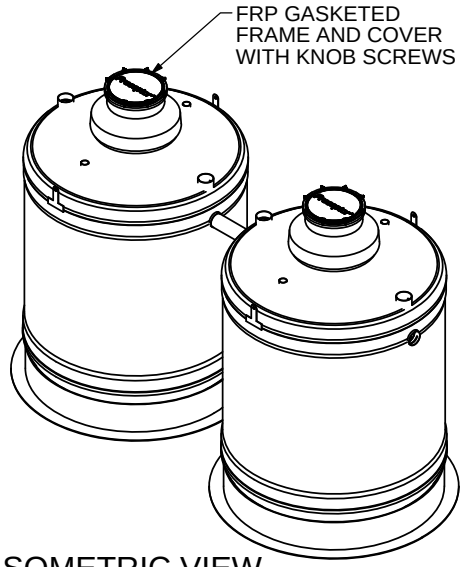

ISOMETRIC VIEW

SKIRT FLANGE
FOR ABOVE GRADE
INSTALLATION

TOTAL WET VOLUME:	5000 GAL
MAX. OIL CAPACITY:	2226 GAL
MAX SOLIDS CAPACITY:	1776 GAL

CONSULT LOCAL AUTHORITIES FOR MINIMUM SIZE OF SEPARATORS

TITLE: PROCEPTOR SEPARATOR
OMC 5000 GALLON INTERCEPTOR
6" INLET & OUTLET
36" ACCESSWAY
ALL DIMENSIONS IN INCHES

PROJECT: WO:

AVAILABLE OPTIONS (CHECKED IF REQUESTED)

	OIL OR GREASE SENSOR ALARM
	SUCTION PIPE FOR INDOOR INSTALLATION
✓	ABOVE GROUND INSTALLATION

REV	DATE	DRAWN
1	NOVEMBER 12, 2007	L. SIMKINS
2	NOVEMBER 12, 2009	L. SIMKINS
3	MARCH 29, 2012	L. SIMKINS
4		
5		
6		
7		
8		
9		
10		

DRAWN BY: L. SIMKINS

DRAWN DATE: FEBRUARY 9, 2007

Proceptor®
by greenturtle®
US 877 428 8187 CAN 877 966 9444
www.greenturtletech.com

SIZE	DWG. NO.	REV.
A	OMC 5000	3

SCALE:1:50 | DO NOT SCALE DRAWING | SHEET 1 OF 1