NOTES:

1. FOR GRAVITY APPLICATIONS ONLY.
2. ALL PROCEPTOR UNITS ARE MANUFACTURED WITH FIBERGLASS REINFORCED PLASTICS. PHYSICAL CHARACTERISTICS AND THICKNESS: POLYESTER RESIN AND E GLASS MINIMUM THICKNESS 1/4" WALL AND 3/8" TOP AND BOTTOM BOWLS.
3. ALL PROCEPTOR UNITS ARE TO BE INSTALLED IN ACCORDANCE WITH THE MANUFACTURERS INSTALLATION INSTRUCTION.
4. STANDARD PIPING IS SCH. 40 PVC.
5. GMC/OMC 500 - 3000 UNITS COME STANDARD WITH 4" INLET AND OUTLET (OTHER PIPE SIZE OPTIONS AVAILABLE ON REQUEST).
6. EXTENSION COLLAR TO BE ORDERED TO MEET FINISHED GRADE, CUT ON SITE FOR FINAL ADJUSTMENT AND CAULKED WITH SIKAFLEX BY CONTRACTOR FOR WATERTIGHT SEAL.
7. COVERS AVAILABLE FOR H20 TRAFFIC LOADING, PEDESTRIAN LOADING OR ABOVE GROUND INSTALLATION.
8. CONSULT GREEN TURTLE FOR OTHER SIZES.
9. 30 YEAR WARRANTY AGAINST LEAKS, AND STRUCTURAL FAILURE.
10. U.S. PATENT #5,746,912; CDN PATENT #2,195,822

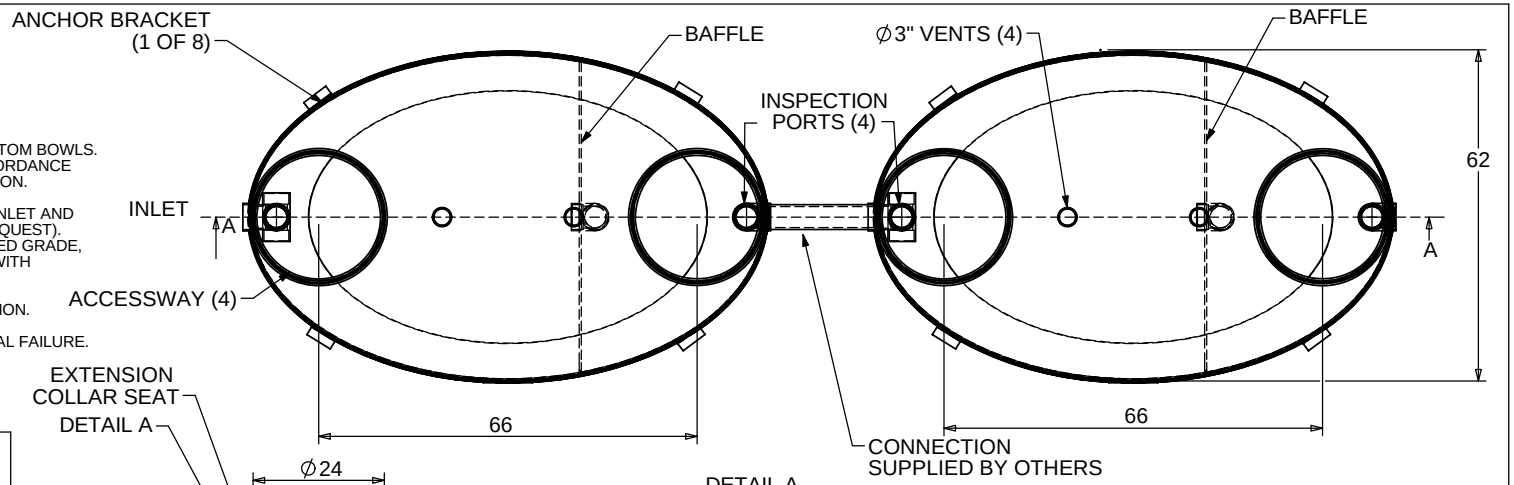

US PAT. # 5746912

Proceptor®

U P C

MANUFACTURER: GREEN TURTLE TECHNOLOGIES

PROCEPTOR MODEL NUMBER:	GMC 2600 UPC
LIQUID CAPACITY (WORKING VOLUME):	2600 US GAL.
RATED FLOW:	
STD. MAX BURIAL DEPTH TO TOP OF TANK:	6 FT.
MAX VERTICAL LOAD:	1133 PSF
MONTH/YEAR OF MANUFACTURE:	

DETAIL A

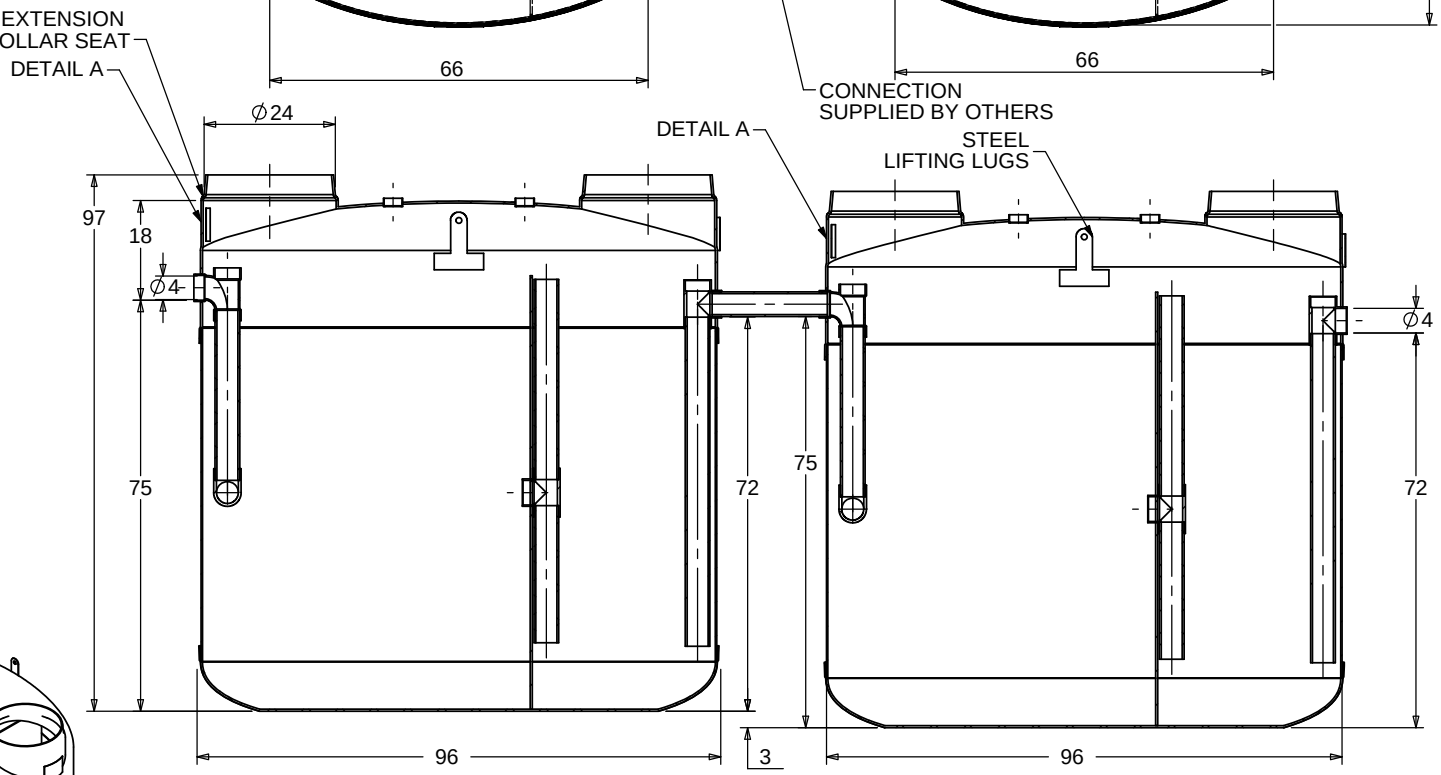

SECTION A-A
SCALE 1 : 35

FOR UPC/IAPMO INSTALLATIONS

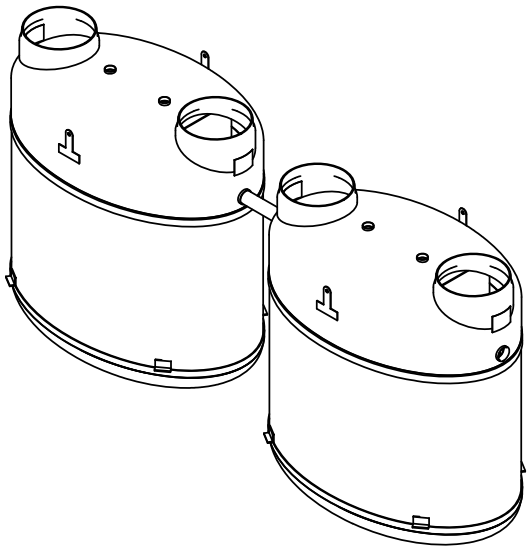

FOR UPC/IAPMO INSTALLATIONS
APPROVED UNDER IAPMO / ANSI Z1001-2007
MEETS ASTM C-581

TITLE: PROCEPTOR F.O.G. SEPARATOR
GMC 2600(2) UPC GALLON INTERCEPTOR
4" INLET & OUTLET
24" ACCESSWAY

PROJECT: WO:

AVAILABLE OPTIONS (CHECKED IF REQUESTED)

- SUCTION PIPE FOR INDOOR INSTALLATION
- GREASE SENSOR ALARM
- ABOVE GROUND INSTALLATION

REV	DATE	DRAWN
1		
2	SEPTEMBER 20, 2005	L. SIMKINS
3	JANUARY 2, 2007	L. SIMKINS
4	MAY 14, 2008	L. SIMKINS
5	NOVEMBER 16, 2009	L. SIMKINS
6	APRIL 3, 2012	L. SIMKINS
7	OCTOBER 03, 2012	S. MANGAT
8	FEBRUARY 12, 2013	S. MANGAT
9	NOV. 11, 2014	
10		

DRAWN BY: F CHANDLER

DRAWN DATE: 6/29/04

Proceptor®

by greenturtle®

US 877 428 8187 CAN 877 966 9444

www.greenturtletech.com

SIZE	DWG. NO.	REV.
A	GMC 2600(2) UPC	9

SCALE:1:35 | DO NOT SCALE DRAWING | SHEET 1 OF 1