NOTES:

1. FOR GRAVITY APPLICATIONS ONLY.
2. ALL PROCEPTOR UNITS ARE MANUFACTURED WITH FIBERGLASS REINFORCED PLASTICS; PHYSICAL CHARACTERISTICS: ISOPHTHALIC POLYESTER RESIN WITH E GLASS.
3. ALL PROCEPTOR UNITS ARE TO BE INSTALLED IN ACCORDANCE WITH THE MANUFACTURERS INSTALLATION INSTRUCTION.
4. STANDARD PIPING IS SCH. 40 PVC.
5. GMC/OMC 4,000 - 10,000 UNITS COME STANDARD WITH 6" INLET AND OUTLET (OTHER CUSTOM SIZES AVAILABLE AT EXTRA CHARGE).
6. ADVISE GREEN TURTLE OF INVERT DEPTH; DEEP INSTALLATIONS MAY REQUIRE CUSTOM REINFORCEMENT.
7. EXTENSION COLLAR TO BE ORDERED TO MEET FINISHED GRADE, CUT ON SITE FOR FINAL ADJUSTMENT, AND CAULKED WITH SIKAFLEX BY CONTRACTOR FOR WATERTIGHT SEAL.
8. COVERS AVAILABLE FOR H20 TRAFFIC LOADING, PEDESTRIAN LOADING OR ABOVE GROUND INSTALLATION.
9. CONSULT GREEN TURTLE FOR OTHER SIZES.
10. 30 YEAR WARRANTY AGAINST LEAKS, AND STRUCTURAL FAILURE.
11. U.S. PATENT #5,746,912; CDN PATENT #2,195,822

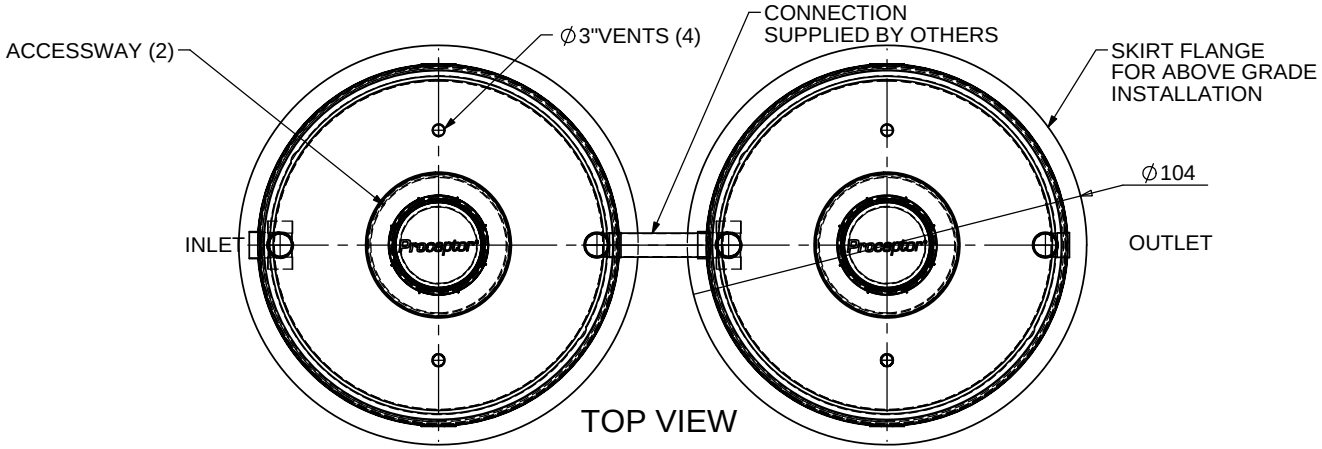

TOP VIEW

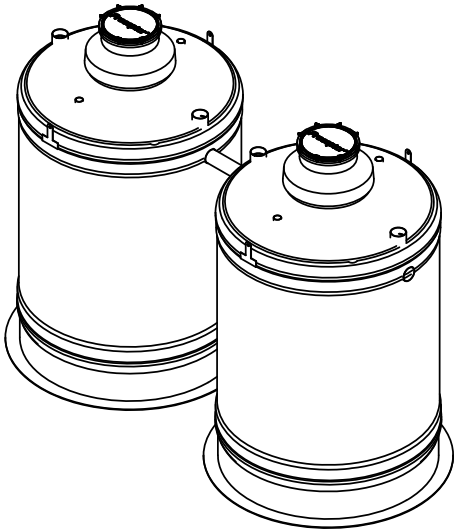

ISOMETRIC VIEW

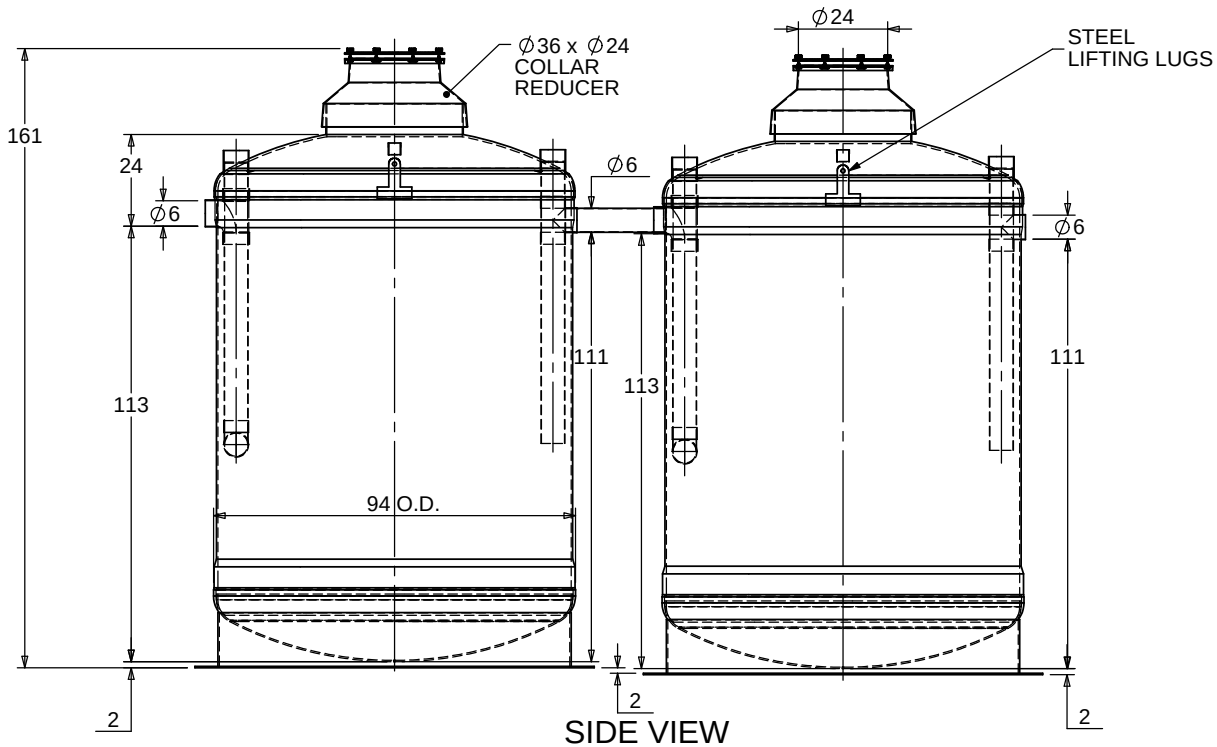

SIDE VIEW

TOTAL WET VOLUME: 6000 GAL
MAX. GREASE CAPACITY: 2883 GAL
MAX SOLIDS CAPACITY: 2092 GAL

CONSULT LOCAL AUTHORITIES FOR MINIMUM SIZE OF SEPARATORS

TITLE: PROCEPTOR SEPARATOR
GMC 6000 GALLON INTERCEPTOR
6" INLET & OUTLET
36" ACCESSWAY
ALL DIMENSIONS IN INCHES

PROJECT: WO:

AVAILABLE OPTIONS (CHECKED IF REQUESTED)

- [ ] OIL OR GREASE SENSOR ALARM
- [ ] SUCTION PIPE FOR INDOOR INSTALLATION
- [x] ABOVE GROUND INSTALLATION

REV	DATE	DRAWN
1	NOVEMBER 12, 2007	L. SIMKINS
2	NOVEMBER 12, 2009	L. SIMKINS
3	MARCH 29, 2012	L. SIMKINS
4		
5		
6		
7		
8		
9		
10		

DRAWN BY: L. SIMKINS
DRAWN DATE: FEBRUARY 9, 2007

Proceptor®
by greenturtle®
US 877 428 8187 CAN 877 966 9444
www.greenturtletech.com

SIZE A | DWG. NO. GMC 6000 | REV. 3
SCALE:1:50 | DO NOT SCALE DRAWING | SHEET 1 OF 1