Z1172-HD-KC

SPECIFICATION SHEET

LARGE CAPACITY GREASE INTERCEPTOR W/ HEAVY-DUTY COVER & ANCHOR FLANGE WITH CLAMP COLLAR

TAG _____

Dimensional Data (inches and [mm]) are Subject to Manufacturing Tolerances and Change Without Notice

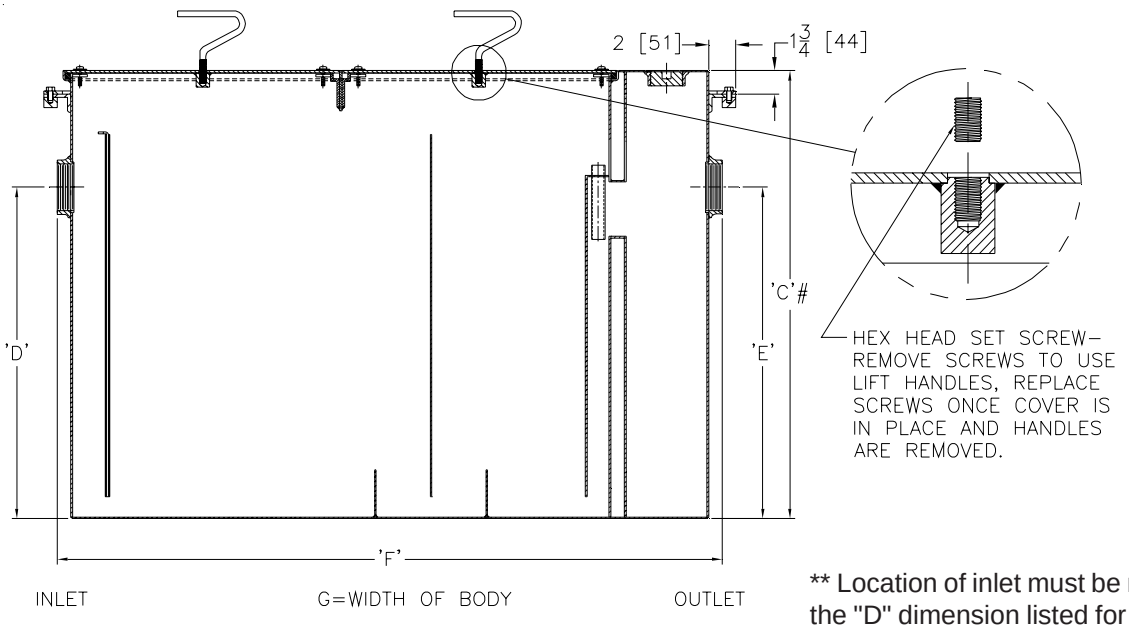

** Location of inlet must be maintained at the "D" dimension listed for each size.

Size	Inlet/ Outlet Size**	Flow Rate G.P.M. [L]	Capacity Water Gal. [L]	Capacity Grease Lbs. [kg]	No. of Covers	Approx. Wt. Lbs. [kg]	Dimensions in Inches C#	D/E	F	G
900	3 [76]	75 [284]	65 [246]	150 [68]	1	316 [143]	26 3/4 [679]	18 1/2 [470]	36 [914]	28 5/8 [727]
1000		100 [378]	110 [416]	200 [91]		408 [185]	33 [838]	23 [584]	42 3/4 [1086]	33 5/8 [854]
1100		125 [472]	150 [567]	250 [114]	2	749 [340]	33 1/8 [841]	24 1/2 [622]	49 1/4 [1251]	40 [1016]
1200	4 [102]	150 [567]	195 [737]	300 [136]		856 [389]	33 3/4 [857]	25 1/4 [641]	56 [1422]	41 5/8 [1057]
1300		200 [756]	270 [1021]	400 [182]		1016 [461]	38 1/2 [978]	29 7/8 [759]	61 [1549]	43 5/8 [1108]
1400	5 [127]	250 [945]	465 [1758]	500 [227]		1384 [628]	44 [1118]	36 [914]	71 [1803]	51 5/8 [1311]
1500		300 [1134]	665 [2514]	600 [272]		1770 [804]	49 1/4 [1251]	39 5/8 [1006]	80 [2032]	58 5/8 [1489]
1600	6 [152]	350 [1323]	865 [3278]	700 [318]		2096 [951]	53 1/2 [1359]	43 7/8 [1114]	87 [2210]	63 5/8 [1616]
1700		400 [1512]	1095 [4139]	800 [363]	3	2440 [1108]	57 1/4 [1454]	47 5/8 [1210]	94 [2388]	67 [1702]
1800		450 [1701]	1280 [4838]	900 [409]		2710 [1230]	58 1/4 [1480]	48 5/8 [1235]	100 [2540]	72 [1829]
1900		500 [1890]	1440 [5443]	1000 [454]		2857 [1297]	60 1/4 [1530]	51 5/8 [1311]	104 [2642]	74 [1880]

ENGINEERING SPECIFICATION: ZURN Z1172-HD-KC
Large capacity Acid Resistant Coated interior and exterior fabricated steel grease interceptor with anchor flange and clamp collar, rated at ____ GPM and ___ Lbs. grease capacity, with internal air relief by-pass, bronze cleanout plug and visible double wall trap seal with removable pressure equalizing/ flow diffusing baffle. Gasketed non-skid heavy-duty secured traffic cover rated at 10,000 lbs. [4536 Kg.] safe live load with removable lift handles, complete with flow control fitting. Regularly furnished with inlet and outlet in high position.

OPTIONS (Check/specify appropriate options)

PREFIXES

_____ Z Acid Resistant Coated Fabricated Steel*
_____ ZS All Type 304 Fabricated Stainless Steel

SUFFIXES

_____ -AL Aluminum Cover
_____ -E Acid Resistant Coated Interior and exterior fabricated steel extension section. (Specify 'C' Dim. required) for recessed installation.
_____ -L Angle type (Z1108-L) flow control device.

'C' Dim's shown are greater than standard interceptor heights in order to accomodate (-HD) and (-KC) options.

*REGULARLY FURNISHED UNLESS OTHERWISE SPECIFIED

REV. A DATE: 06/30/06 C.N. NO. 95273

DWG. NO. 82181 PRODUCT NO. Z1172-HD-KC

ZURN INDUSTRIES, INC. ♦ SPECIFICATION DRAINAGE OPERATION ♦ 1801 Pittsburgh Ave. ♦ Erie, PA 16514
Phone: 814\455-0921 ♦ Fax: 814\454-7929 ♦ World Wide Web: www.zurn.com
In Canada: ZURN INDUSTRIES LIMITED ♦ 3544 Nashua Drive ♦ Mississauga, Ontario L4V1L2 ♦ Phone: 905\405-8272 Fax: 905\405-1292