Z1204-N-X3

ADJUSTABLE VERTICAL SIPHON
JET-NO-HUB W/ 3" [76] FOOT EXTENSION

SPECIFICATION SHEET

TAG _____

Dimensional Data (inches and [mm]) are Subject to Manufacturing Tolerances and Change Without Notice

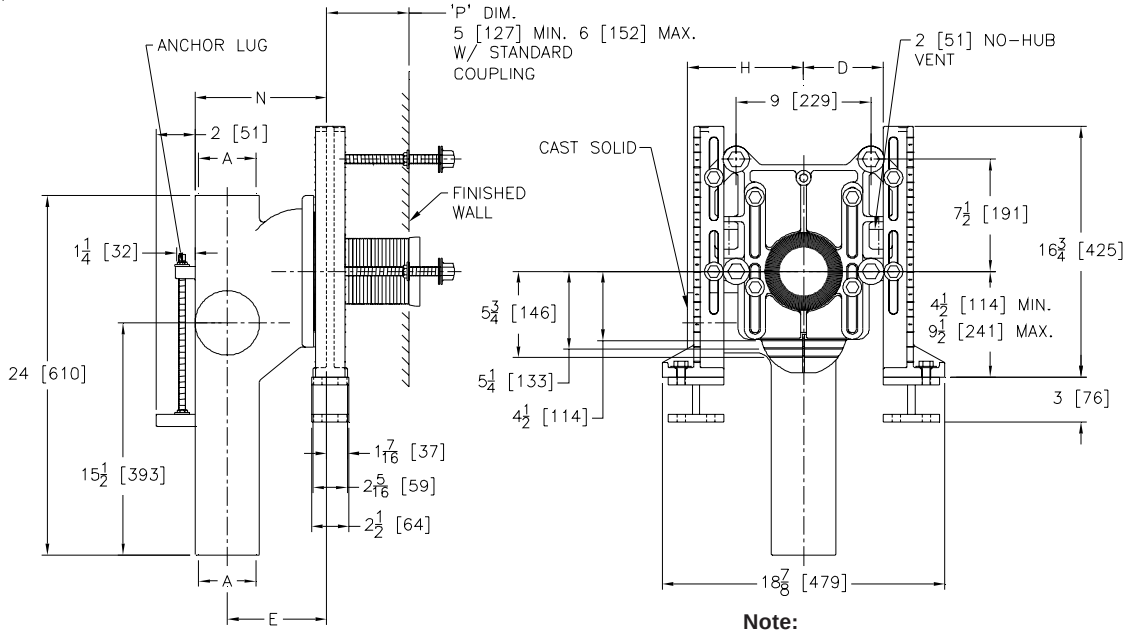

Product No.	Dimensions In Inches					Approx. Wt.Lbs. [kg]
	A	D	E	H	N	
Z1204-N4-X3	4 [102]	5 [127]	6 5/8 [168]	5 1/2 [140]	8 7/8 [225]	80 [36]
Z1204-N5-X3	5 [127]	5 1/2 [140]	6 5/8 [168]	6 1/2 [165]	9 3/8 [238]	85 [39]
Z1204-N6-X3	6 [152]	6 [152]	7 1/8 [181]	6 1/2 [165]	10 3/8 [264]	95 [43]

Note:
1. Min. 'P' Dim. Obtainable = 2 [51]
2. 2 [51] No-Hub vent connection regularly furnished on right hand side. Left hand available when specified (Suffix-VL)
3. Auxiliary inlet available right (-JR) or left (-JL) or both sides (-JJ) when specified.
4. Feet bolted to floor using min. 1/2 [13] dia. bolts and back slots on carrier feet.
5. Back anchor foot required for secure installation.

ENGINEERING SPECIFICATION: ZURN Z1204-N-X3 Adjustable, vertical siphon jet water closet "Rigid System" with ( ) size No-Hub connections and ( ) side inlets. Complete with Dura-Coated cast iron right hand, left hand, or double main fitting, with 2 [51] vent, adjustable gasketed faceplate, universal floor mounted foot supports with 3 [76] foot extensions, corrosion resistant adjustable ABS coupling with integral test cap, fixture bolts, trim, and stud protectors. Rear anchor tie down and bonded "Neo-Seal" gasket.

PRODUCT/DEFINITION

____ Z1204-N( )-X3 No-Hub Stack, Single Inlet, 2 [51] Right Hand Vent

PREFIXES

____ Z D.C.C.I. System with Zurn "ZZ" Adjustable Coupling*
____ ZC D.C.C.I. System with Compression Fit Faceplate
____ ZF D.C.C.I. System with Non-Adjustable One Piece Carrier
____ ZQ D.C.C.I. System with NPT Faceplate, Non-Adjustable Coupling

SUFFIXES

____ -A Auxiliary Support Assembly (For P-Dim. Greater than 18 [457])
____ -B Blowout Type Fixture Support
____ -BC Back Cleanout
____ -CC Corrosion Resistant Cast Iron Coupling (6 to 12 [152] to [305])
____ -CL Coupling Length Greater than 12 [152] (Specify Length Required.)
____ -F Floor Mount, Back Outlet Fixture Support
____ -G Galvanized Cast Iron
____ -JJ Two 2" [51] Auxiliary Inlets
____ -JL 2 [51] Left-Hand Auxiliary Inlet
____ -JR 2 [51] Right-Hand Auxiliary Inlet
____ -M Auxiliary Foot Support (For P-Dim. 10-18 [254-457])
____ -VL Left Hand Vent Connection
____ -VP Vandal-Proof Trim
____ -29 Mechanical Test Cap Assembly (Previously Z1210-29)
____ -45 Finishing Frame for Siphon Jet System
____ -50 Flush Valve Supply Support for W.C.
____ -61 "ZZ" Coupling Wrench

*REGULARLY FURNISHED UNLESS OTHERWISE SPECIFIED

REV.	DATE: 2/19/08	C.N. NO. 98132
DWG. NO. 83658	PRODUCT NO. Z1204-N-X3	

ZURN INDUSTRIES, LLC ♦ SPECIFICATION DRAINAGE OPERATION ♦ 1801 Pittsburgh Ave. ♦ Erie, PA 16514
Phone: 814\455-0921 ♦ Fax: 814\454-7929 ♦ World Wide Web: www.zurn.com
In Canada: ZURN INDUSTRIES LIMITED ♦ 3544 Nashua Drive ♦ Mississauga, Ontario L4V1L2 ♦ Phone: 905\405-8272 Fax: 905\405-1292