Specification Drainage

SD1021 Customer Guide – CANADA

ZURN.COM US 1.855.ONE.ZURN CANADA 1.877.892.5216

Effective October 1, 2021
Replaces All Previous Price Lists

INTRODUCTION

TABLE OF CONTENTS - BY SECTION	2
Z250H FOG-CEPTOR® INTERCEPTOR	7
STABILIZER SOLUTIONS	9
Z1231EZ UNIVERSAL LAVATORY CARRIER	10
ZURN TOP-SET® DECK PLATE	11
Z130 SIPHONIC ROOF DRAIN WITH DECK PLATE	12
GREEN ROOFING DRAINAGE SOLUTIONS	14
A PERFECT FIT: Z1322XL-EZ AND Z1332XL-EZ ECOLOTROL™ WALL HYDRANTS	15
EZ HYDRANTS: Z1327-EZ, Z1350-EZ, Z1320XL-EZ	16
ZURN BARIATRIC PROVIDES SUPERIOR PERFORMANCE	17
Z1222-CB CARRIER BANK	19
CUSTOMER GUIDE INSTRUCTIONS	20
TYPICAL PRODUCT PAGE NAVIGATION	20
ABBREVIATIONS USED IN THIS CUSTOMER GUIDE	21

TABLE OF CONTENTS - BY SECTION

PRODUCT HIGHLIGHT

Z250H FOG-CEPTOR® INTERCEPTOR 7
STABILIZER SOLUTIONS 9
Z1231EZ UNIVERSAL LAVATORY CARRIER 10
ZURN TOP-SET® DECK PLATE 11
Z130 SIPHONIC ROOF DRAIN WITH DECK PLATE 12
GREEN ROOFING DRAINAGE SOLUTIONS 14
A PERFECT FIT: Z1322XL-EZ AND Z1332XL-EZ ECOLOTROL™ WALL HYDRANTS 15
EZ HYDRANTS: Z1327-EZ, Z1350-EZ, Z1320XL-EZ 16
ZURN BARIATRIC PROVIDES SUPERIOR PERFORMANCE 17
Z1222-CB CARRIER BANK 19
CUSTOMER GUIDE INSTRUCTIONS 20
TYPICAL PRODUCT PAGE NAVIGATION 20
ABBREVIATIONS USED IN THIS CUSTOMER GUIDE 21

ROOF DRAINS

ROOF DRAIN - PRODUCT COMPLIANCE 24
ROOF DRAIN - GENERAL INFORMATION 24
ROOF DRAIN - APPLICATION INDEX 24
Z100 Z100 FLOFORCE™ HIGH PERFORMANCE ROOF DRAIN - LOW SILHOUETTE DOME 25
Z100 15" [381 MM] DIAMETER MAIN ROOF DRAIN WITH LOW SILHOUETTE DOME 26
Z101 HIGH CAPACITY 20" [508 MM] DIAMETER MAIN ROOF DRAIN WITH LOW SILHOUETTE DOME 27
100C 15" [381 MM] DIAMETER DEEP SUMP DUAL OUTLET ROOF DRAIN - LOW SILHOUETTE DOME 28
Z104 15" [381 MM] DIAMETER DEEP SUMP ROOF DRAIN WITH LOW SILHOUETTE DOME 29
Z105 CONTROL-FLO™ ROOF DRAIN WITH PARABOLIC WEIR 30
Z107 20" [508 MM] WIDE DECK FLANGE ROOF DRAIN 31
Z108 15" [381 MM] DIAMETER DECK RECEPTOR DRAIN 32
Z110 15" [381 MM] GREEN ROOF DRAIN WITH PERFORATED SCREEN ASSEMBLY, AND REMOVABLE COVER WITH LIFT HANDLE 33
Z110-AI GREEN ROOF DRAIN WITH PERFORATED SCREEN ASSEMBLY, REMOVABLE COVER WITH LIFT HANDLE, AND AUXILIARY INLET 34
ZF110-R 15" [381 MM] GREEN ROOF BOX - PERFORATED SCREEN ASSEMBLY 35
ZF110-S GREEN ROOF BOX - PERFORATED SCREEN ASSEMBLY, REMOVABLE COVER 36
Z111 12" [305 MM] DIAMETER FLAT DECK ROOF DRAIN FOR METAL DECKS 36
Z121 12" [305 MM] DIAMETER ROOF DRAIN LOW SILHOUETTE DOME 37
ZCF121 12" [305 MM] DIAMETER ROOF DRAIN 38
Z122 12" [305 MM] DIAMETER DECK RECEPTOR DRAIN 39
Z125 8-3/8" [203 MM] DIAMETER ROOF DRAIN LOW SILHOUETTE DOME 40
Z127 8-1/2" [216 MM] DIAMETER DECK RECEPTOR DRAIN 41
Z130 8" [203 MM] MAIN ROOF DRAIN 42
ZCF130 8" [203 MM] CONTROL ROOF DRAIN 42
Z131 14-9/32" [363 MM] DIAMETER SIPHONIC OVERFLOW ROOF DRAIN 43
Z135-6 8" [203 MM] MAIN ROOF DRAIN FOR CONVENTIONAL INVERTED PROMENADE DECK ROOF 43
Z150 14" [356 MM] SQUARE TOP PROM-DECK DRAIN WITH HEEL-PROOF GRATE AND ROTATABLE FRAME 44
Z154 12" [305 MM] SQUARE TOP PROM-DECK DRAIN WITH HEEL-PROOF GRATE AND ROTATABLE FRAME 45
Z158 10" [254 MM] SQUARE TOP PROM-DECK DRAIN WITH HEEL-PROOF GRATE AND ROTATABLE FRAME 46
Z160 135° SCUPPER DRAIN 47
Z161 3" X 10" [76 MM X 254 MM] OBLIQUE SCUPPER DRAIN 47
Z163 15" [381 MM] DIAMETER COMBINATION MAIN ROOF AND OVERFLOW DRAIN WITH LOW SILHOUETTE DOMES AND DOUBLE TOP-SET® DECK PLATE 48
Z164 12" [305 MM] DIAMETER COMBINATION MAIN ROOF AND OVERFLOW DRAIN WITH LOW SILHOUETTE DOMES AND DOUBLE TOP-SET® DECK PLATE 49
Z165 8-3/8" [203 MM] DIAMETER COMBINATION MAIN ROOF AND OVERFLOW DRAIN WITH LOW SILHOUETTE DOMES AND DOUBLE TOP-SET® DECK PLATE 50
Z180 4-1/2" [114 MM] DIAMETER CORNICE DRAIN WITH BOTTOM OUTLET 50
Z181 6" [152 MM] DIAMETER CORNICE DRAIN WITH BOTTOM OUTLET 51
Z182 4-1/2" [114 MM] DIAMETER CORNICE DRAIN WITH 90° OUTLET 51
Z185 6" [152 MM] DIAMETER CORNICE DRAIN WITH 90° OUTLET 52
Z187 6" X 7" [152 MM X 178 MM] OR 8" X 12" [203 MM X 305 MM] OBLIQUE SCUPPER DRAIN 52
Z189 5" X 6" X 11" [127 MM X 152 MM X 279 MM] SCUPPER DRAIN 53
Z190 VERTICAL EXPANSION JOINT 53
Z191 5" X 4" X 24" [127 MM X 102 MM X 610 MM] DOWNSPOUT BOOT 54
Z191-RD 4" X 18" [127 MM X 457 MM] DOWNSPOUT BOOT 54
Z192 4" X 3" [102 MM X 76 MM] DOWNSPOUT BOOT 55
Z193 VANDAL-PROOF HOODED VENT CAP 55
Z195 VENT STACK FLASHING SLEEVE 56
Z196 VENT STACK FLASHING SLEEVE 56
Z197 RISER SLEEVE 57
Z198 PARAPET SCUPPER SLEEVE 57
Z199 DOWNSPOUT NOZZLE 58
ZF199 CHAMELEON DOWNSPOUT NOZZLE WITH FLAPPER 59
Z199-DC DOWNSPOUT COVER 60
ZF7000 FLOW SENSOR 60

FLOOR DRAINS

FLOOR DRAINS - GENERAL INFORMATION 64
FLOOR DRAINS - APPLICATION INDEX 64
CAST IRON EZ1™ NOMENCLATURE DECODER 65
Z211 FLOOR DRAIN BODY ONLY 66
Z211-A FLOOR DRAIN WITH ROUND STRAINER 66
ZN211-B FLOOR AND SHOWER DRAIN WITH ROUND NICKEL BRONZE STRAINER 67
ZN211-BE ROUND FUNNEL NICKEL BRONZE FLOOR DRAIN 67
ZN211-BF OVAL OPEN THROAT FUNNEL NICKEL BRONZE FLOOR DRAIN 68
ZXN211-H FLOOR DRAIN WITH HEAVY DUTY SQUARE STRAINER 68
ZN211-Y FLOOR AND SHOWER DRAIN WITH SQUARE NICKEL BRONZE STRAINER 69
ZX211-Y FLOOR DRAIN WITH SQUARE HEAVY-DUTY CAST IRON STRAINER 69
Z300 THOROFLUSH DRAIN 70
Z310 THOROFLUSH DRAIN 70
Z315 VANDAL-PROOF ACCESS DRAIN 71
Z319 THOROFLUSH DRAIN – LARGE CAPACITY 71
Z320 REFRIGERATOR DRAIN 72
Z325 INDIRECT WASTE FUNNEL WITH INTEGRAL BACKWATER VALVE 72
Z326 INDIRECT WASTE FUNNEL 73
Z328 FUNNEL CONVERTING ASSEMBLY 73
Z329 FUNNEL CONVERTING ASSEMBLY 74
Z349 TERRACE PLANTING AREA DRAIN 75
Z350 PLANTING AREA DRAIN 75
Z355 PRISON CELL FLOOR DRAIN 76
ZXN400 "TYPE A" HEAVY-DUTY NICKEL BRONZE ROUND STRAINER 76
ZX400 "TYPE A" HEAVY-DUTY CAST IRON STRAINER 77
ZN400 "TYPE B" ROUND STRAINER WITH HEEL-PROOF SQUARE OPENINGS 77
ZS400 "TYPE B" ROUND STAINLESS STEEL STRAINER 78
ZS400 "TYPE BS" ROUND STRAINER WITH SLOTTED OPENINGS 78
ZN400 "TYPE BF" ROUND NICKEL BRONZE STRAINER WITH OVAL FUNNEL - OPEN THROAT 79
Z400 "TYPE BL" ROUND STRAINER WITH DEX-O-TEX FLANGE 79
Z400 "TYPE C" ROUND HINGED STRAINER 80
Z400 "TYPE E" ROUND STRAINER WITH INTEGRAL FUNNEL 80
Z400 "TYPE G" ROUND STRAINER WITH DOME 81

TABLE OF CONTENTS - BY SECTION

ZXN400 "TYPE H" HEAVY-DUTY SQUARE ADJUSTABLE STRAINER 81
Z400 "TYPE I" ROUND STRAINER WITH RAISED LIP 82
Z400 "TYPE J" RECTANGULAR STRAINER WI TH HEEL-PROOF SLOTTED OPENINGS 82
Z400 "TYPE K" ANGULAR STRAINER 83
Z400 "TYPE M" ROUND STRAINER WITH SLOTTED OPENINGS AND SUR-SET BUCKET 83
Z400 "TYPE N" ROUND STRAINER WITH DEEP FLANGED GRATE 84
ZN400 "TYPE R" CIRCULAR ADJUSTABLE STRAINER WITH SURFACE CLAMP RING AND GRATE 84
Z400 "TYPE S" SQUARE STRAINER 85
ZS400 "TYPE SS" SQUARE STRAINER 85
Z400 "TYPE SC" SQUARE STRAINER WITH SOLID HINGED COVER 86
Z400 "TYPE SH" SQUARE HINGED STRAINER 86
Z400-SR FLOOR DRAIN STABILIZER RING 87
Z400-U ADJUSTABLE STRAINER EXTENSION 87
Z400-18 LEVELING RING 87
Z400 "TYPE Y" SQUARE STRAINER 88
ZSS400 "TYPE Y" SQUARE STAINLESS STEEL STRAINER 88
ZXN400 "TYPE Y" HEAVY-DUTY SQUARE ADJUSTABLE STRAINER 88
Z499B ROUND PROTECTIVE COVER FOR FLOOR DRAINS 89
Z499S SQUARE PROTECTIVE COVER FOR FLOOR DRAINS 89
Z414 4" [102 MM] ROUND FUNNEL 90
Z414-1 3-1/2" X 9" [89 MM X 229 MM] OVAL FUNNEL 90
Z415-BZ1 BODY ASSEMBLY W/ "TYPE B" STRAINER AND EZ1™ TECHNOLOGY 91
Z415-SZ1 BODY ASSEMBLY W/ "TYPE S" STRAINER AND EZ1™ TECHNOLOGY 92
Z415-BZ1-DP BODY ASSEMBLY W/ "TYPE B" STRAINER, DECK PLATE AND EZ1™ TECHNOLOGY 93
Z415-SZ1-DP BODY ASSEMBLY W/ "TYPE S" STRAINER, DECK PLATE AND EZ1™ TECHNOLOGY 94
Z415B-DP BODY ASSEMBLY W/ "TYPE B" STRAINER AND DECK PLATE 95
Z415S-DP BODY ASSEMBLY W/ "TYPE S" STRAINER AND DECK PLATE 96
Z415 FLOOR DRAIN BODY WITH CLAMPING COLLAR 97
ZX415-A FLOOR DRAIN WITH HEAVY-DUTY ROUND STRAINER 98
ZXN415-A FLOOR DRAIN WITH HEAVY-DUTY ROUND STRAINER 99
ZN415-B FLOOR AND SHOWER DRAIN WITH ROUND STRAINER 100
ZN415-BE FUNNEL FLOOR DRAIN 101
ZN415-BF OVAL FUNNEL FLOOR DRAIN 102
ZS415 BODY ASSEMBLY WITH "TYPE BS" STRAINER 103
Z415 BODY ASSEMBLY WITH "TYPE BL" STRAINER 104
Z415 BODY ASSEMBLY WITH "TYPE C" STRAINER 105
Z415 BODY ASSEMBLY WITH "TYPE E" STRAINER 106
Z415 BODY ASSEMBLY WITH "TYPE G" STRAINER 107
ZXN415-H FLOOR DRAIN WITH HEAVY-DUTY SQUARE GRATE 108
Z415 BODY ASSEMBLY WITH "TYPE H" STRAINER 109
Z415 BODY ASSEMBLY WITH "TYPE I" STRAINER 110
Z415 BODY ASSEMBLY WITH "TYPE J" HEEL-PROOF STRAINER 111
Z415 BODY ASSEMBLY WITH "TYPE K" STRAINER 112
Z415 BODY ASSEMBLY WITH "TYPE M" STRAINER AND SUR-SET BUCKET 113
Z415 BODY ASSEMBLY WITH "TYPE N" STRAINER 114
ZN415-R FLOOR DRAIN WITH CIRCULAR ADJUSTABLE STRAINER WITH SURFACE CLAMP RING AND GRATE 115
Z415 BODY ASSEMBLY WITH "TYPE S" STRAINER 116
ZS415 BODY ASSEMBLY WITH "TYPE SS" STRAINER 117
Z415 BODY ASSEMBLY WITH "TYPE SC" STRAINER 118
Z415 BODY ASSEMBLY WITH "TYPE SH" STRAINER 119
Z415-U BODY ASSEMBLY WITH "TYPE U" HUB FUNNEL 120
ZN415-Y FLOOR DRAIN WITH NICKEL BRONZE SQUARE STRAINER 121
ZX(N)415-Y8 FLOOR DRAIN WITH HEAVY-DUTY SQUARE ADJUSTABLE CAST IRON STRAINER 122
Z420 DEEP SHANK FLOOR AND SHOWER DRAIN FOR MARBLE AND GRANITE APPLICATIONS 123
Z450 DRUM TRAP DRAIN WITH "TYPE B" STRAINER 124
Z451 SHALLOW TRAP DRAIN WITH "TYPE B" STRAINER 125
Z453 DEEP SEAL TRAP DRAIN WITH "TYPE B" STRAINER 126
Z455 TRAP DRAIN WITH FLOOR CLEANOUT WITH "TYPE B" STRAINER 127
Z456 DEEP SEAL TRAP DRAIN WITH FLOOR CLEANOUT AND CLAMP COLLAR WITH "TYPE B" STRAINER 128
Z460B SHALLOW BODY FLOOR DRAIN WITH SIDE OUTLET AND "TYPE B" STRAINER 129
Z461 6" [152 MM] SQUARE MODULAR NON-ADJUSTABLE FLOOR DRAIN WITH CLAMPING FRAME 130
Z503 15-3/8" [391 MM] HEAVY-DUTY AREA DRAIN 130
Z505 12-1/4" [311 MM] HEAVY-DUTY DRAIN 131
Z507 7" [178 MM] MEDIUM-DUTY DRAIN 132
Z508 9" [229 MM] EXTRA-HEAVY-DUTY DRAIN 133
Z509 12-1/4" [311 MM] HEAVY-DUTY DRAIN 134
Z511 9" [229 MM] HEAVY-DUTY DRAIN 135
Z512 12-1/4" [311 MM] HEAVY-DUTY DRAIN 136
Z513 9" [229 MM] SQUARE HINGED HEAVY-DUTY DRAIN 137
Z520 9-1/4" [235 MM] ADJUSTABLE HEAVY-DUTY DRAIN 138
Z521 12-1/4" [311 MM] DIAMETER ADJUSTABLE HEAVY-DUTY DRAIN 139
Z526 12-1/4" [311 MM] ADJUSTABLE HEAVY-DUTY DRAIN 140
Z530 9" [229 MM] MEDIUM-DUTY WIDE FLANGE DECK DRAIN 141
Z531 9" [229 MM] ADJUSTABLE FRAME WIDE FLANGE MEDIUM-DUTY DECK DRAIN 141
Z532 12-1/4" [311 MM] DIAMETER WIDE FLANGE HEAVY-DUTY FLOOR DRAIN 142
Z533 9" [229 MM] DIAMETER HEAVY-DUTY PARKING DECK DRAIN WITH SUPPORT FLANGE 142
Z534 12-1/4" [311 MM] DIAMETER HEAVY-DUTY PARKING DECK DRAIN WITH SUPPORT FLANGE 143
Z535 HEAVY-DUTY PARKING STRUCTURE DRAIN 143
Z536-8 8" [203 MM] DIAMETER HEAVY-DUTY ADJUSTABLE FLOOR DRAIN 144
Z536 15-3/8" [391 MM] DIAMETER HEAVY-DUTY PARKING DECK DRAIN WITH SUPPORT FLANGE 144
Z537 15-7/8" [403 MM] SQUARE TOP HEAVY-DUTY PARKING DECK DRAIN WITH SUPPORT FLANGE 145
Z539 12-1/4" [311 MM] HEAVY-DUTY DRAIN WITH DEEP SUMP 145
Z540 12-1/4" [311 MM] MEDIUM-DUTY DRAIN WITH SUR-SET BUCKET 146
Z541 12-1/4" [311 MM] DIAMETER HEAVY-DUTY DRAIN 147
Z545 16" [152 MM] DIAMETER HEAVY-DUTY DRAIN 148
Z546 21-1/2" [546 MM] DIAMETER EXTRA HEAVY-DUTY DRAIN 149
Z547 21" [533 MM] DIAMETER EXTRA HEAVY-DUTY HEEL-PROOF PARKING DECK DRAIN WITH SUPPORT FLANGE 149
Z550 9" [229 MM] DIAMETER MEDIUM-DUTY DRAIN 150
Z551 9" [229 MM] DIAMETER MEDIUM-DUTY DRAIN 151
Z554 9" [229 MM] MEDIUM-DUTY DRAIN WITH SUR-SET BUCKET 151
Z555 8" [203 MM] HEAVY-DUTY FLOOR DRAIN WITH DEEP ANTI-TILT GRATE 152
Z556 8" [203 MM] ADJUSTABLE HEAVY-DUTY DRAIN 153
Z566 12" [305 MM] SQUARE OPEN TOP DRAIN 154
Z575 6" X 12" [152 MM X 305 MM] MEDIUM-DUTY GUTTER DRAIN 154
Z609 9" [229 MM] SQUARE HEAVY-DUTY DRAIN 155
Z610 12-1/2" [318 MM] HEAVY-DUTY DRAIN 156
Z610-ADJ 12" [305 MM] SQUARE HEAVY-DUTY ADJUSTABLE DRAIN 157
Z611 9" [229 MM] MEDIUM-DUTY DRAIN 158
Z624 ISOLATION DECK DRAIN 159
Z625 ADJUSTABLE ISOLATION DECK DRAIN 159
Z627 HEAVY-DUTY ADJUSTABLE ISOLATION DECK DRAIN 160
Z629 VERTICAL WALL DRAIN WITH BACKWATER VALVE 161
Z645 12" X 12" [305 MM X 305 MM] EXTRA-HEAVY-DUTY DRAIN 161
Z662 16" [152 MM] HEAVY-DUTY DRAIN 162

TABLE OF CONTENTS - BY SECTION

Z662-HF 16" [152 MM] HEAVY-DUTY DRAIN WITH HIGH FLOW DUCTILE IRON GRATE 163
Z664 6" [152 MM] WIDE HEAVY-DUTY MODULAR TRENCH DRAIN 164
Z665 12" [305 MM] WIDE HEAVY-DUTY MODULAR TRENCH DRAIN 165
Z667 6" [152 MM] WIDE MEDIUM-DUTY MODULAR TRENCH DRAIN 166
Z668 11-1/4" X 19-1/4" [279 MM X 483 MM] HEAVY-DUTY DRAIN 166
Z673 29" X 30" [737 MM X 762 MM] EXTRA HEAVY-DUTY DRAIN 167
Z675 13-1/2" [343 MM] EXTRA HEAVY-DUTY DRAIN 167
Z676 13-1/2" [343 MM] EXTRA HEAVY-DUTY DRAIN 168
Z730 9" [229 MM] TOP MEDIUM-DUTY DRAIN 168
Z742 LIGHT-DUTY TRAP DRAIN 169
ZF799 HEAVY-DUTY CATCH BASIN DRAIN 170
VP-DRIVER VANDAL-PROOF DRIVER 170

TRAPS, PRIMERS, AND BACKWATER VALVES

TRAPS, PRIMERS, AND BACKWATER VALVES – APPLICATION INDEX 172
TRAPS, PRIMERS, AND BACKWATER VALVES – OPTIONS AND VARIATIONS 172
Z1072 ZSHIELD™ BARRIER TRAP SEAL DEVICE FOR FLOOR DRAINS 173
Z1000 DEEP SEAL TRAP 174
Z1019 FUNNEL DRAIN WITH "P" TRAP 174
Z1020XL ELECTRONIC TRAP PRIMER 175
Z1021 WATER SAVER TRAP PRIMER WITH 1-1/2" [38 MM] COPPER SWEAT WALL CONNECTION 175
Z1022-XL LEAD-FREE SANI-GARD AUTOMATIC TRAP PRIMER 176
Z1023 TRAP PRIMER CONNECTION ADAPTER 176
Z1024 FIXED AIR GAP 177
Z1025 FIXED AIR GAP 177
Z1030 HUB ADAPTER 178
Z1032 INSIDE CAULK REDUCER 178
Z1033 FEMALE PIPE THREAD REDUCER 179
Z1034 FEMALE PIPE ECCENTRIC REDUCER 179
Z1035 FLOOR DRAIN INSTALLATION STABILIZER 180
Z1035-Q STRUCTURAL DECK DRAIN STABILIZER 180
Z1036 FLOOR DRAIN INSTALLATION STABILIZER 181
Z1040 NO-HUB ADAPTER 181
Z1042 ELBOW ADAPTER 182
Z1088 BACKWATER VALVE GATE TYPE 182
Z1090 BACKWATER VALVE FLAPPER TYPE 183
Z1091 BACKWATER VALVE FLAPPER TYPE 183
Z1095 BACKWATER VALVE FLAPPER TYPE 184
Z1095-15 BACKWATER VALVE WITH FLOOR LEVEL CLEANOUT 184
Z1099 BACKWATER VALVE BALL FLOAT TYPE 185

INTERCEPTORS

INTERCEPTORS – GENERAL INFORMATION 188
INTERCEPTORS – APPLICATION INDEX 188
GREASE INTERCEPTORS – PURPOSE 188
GREASE INTERCEPTORS – OPERATION 189
Z250H FOG-CEPTOR® INTERCEPTOR 190
Z1165 100 PPM GREASE INTERCEPTOR SYSTEM WITH SOLIDS INTERCEPTOR 191
Z1170 GREASE INTERCEPTOR 192
Z1170-UN GREASE INTERCEPTOR WITH USER NOTIFICATION SYSTEM 194
ZS1170 GREASE INTERCEPTOR STAINLESS STEEL 195
Z1171 LOW PROFILE GREASE INTERCEPTOR 196
Z1171-TD LOW PROFILE GREASE INTERCEPTOR WITH ACCUMULATING CONE AND FLOW CONTROL TEE 197
Z1172 LARGE CAPACITY GREASE INTERCEPTOR 198
Z1172-UN LARGE CAPACITY GREASE INTERCEPTOR WITH USER NOTIFICATION SYSTEM 200
Z1173 EJECTO-MATIC GREASE INTERCEPTOR 201
Z1173-TD EJECTO-MATIC GREASE INTERCEPTOR WITH GREASE ACCUMULATING CONE AND IN-LINE SHUTOFF VALVE 202
Z1174 GREASE EATING BACTERIA DOSING UNIT AND SOLIDS INTERCEPTOR COMBINATION 203
SOLIDS INTERCEPTORS – GENERAL PRODUCT INFORMATION 204
SOLIDS INTERCEPTORS – APPLICATION INDEX 204
SOLIDS INTERCEPTORS – SIZING 204
Z1175 HAIR INTERCEPTOR 205
Z1176 HAIR INTERCEPTOR 205
Z1180 SOLIDS INTERCEPTOR 206
Z1181 SOLIDS INTERCEPTOR 206
Z1182 SIDE ACCESS SOLIDS INTERCEPTOR 207
Z1183 SOLIDS INTERCEPTOR 207
Z1183-DF SOLIDS INTERCEPTOR WITH DISPOSABLE FILTER BAGS 208
Z1183-FC SOLIDS INTERCEPTOR WITH FLUSH COVER 209
Z1184 BOTTOM ACCESS SOLIDS INTERCEPTOR 210
Z1185 LINT INTERCEPTOR 211
OIL INTERCEPTORS – GENERAL PRODUCT INFORMATION 212
OIL INTERCEPTORS – APPLICATION INDEX 212
Z1186 OIL INTERCEPTOR 213
Z1186-ST OIL INTERCEPTOR WITH INTEGRAL STORAGE TANK 214
Z1187 SAND AND SEDIMENT INTERCEPTOR 215
Z1187-SI SAND INTERCEPTOR 216
Z1188 LARGE CAPACITY OIL INTERCEPTOR 217
Z1188-ST LARGE CAPACITY OIL INTERCEPTOR WITH INTEGRAL STORAGE TANK 218
Z1189 OIL/SEDIMENT INTERCEPTOR WITH HEAVY-DUTY GRATE 219
Z1194 OIL LEVEL SENSOR RETROFIT KIT 220
Z1196 OIL INTERCEPTOR WITH OIL LEVEL SENSOR 221
Z1198 LARGE CAPACITY OIL INTERCEPTOR WITH OIL LEVEL SENSOR 222
Z1198-ST LARGE CAPACITY OIL INTERCEPTOR WITH INTEGRAL STORAGE TANK AND OIL LEVEL FLOAT SENSOR 223

CARRIER SYSTEMS

CARRIER – APPLICATION INDEX 226
CARRIER – PRODUCT COMPLIANCE 226
CARRIER – TECHNICAL DATA 226
CARRIER – HOW TO SPECIFY 226
CARRIER – TECHNICAL DATA 227
Z1200 CARRIER TOOLS AND ACCESSORIES 228
Z1201-N EZCARRY® ADJUSTABLE HORIZONTAL HIGH PERFORMANCE SIPHON JET – NO-HUB SERIES 230
Z1201-H EZCARRY® ADJUSTABLE HORIZONTAL HIGH PERFORMANCE SIPHON JET – HUB AND SPIGOT SERIES 232
Z1201-N-XB EZCARRY® BARIATRIC CARRIER – 1000 LB ADJUSTABLE HORIZONTAL SIPHON JET – NO-HUB SERIES 234
Z1201-N-XH EZCARRY® EXTRA HEAVY-DUTY 750 LB ADJUSTABLE HORIZONTAL SIPHON JET – NO-HUB SERIES 235
ZE1201-N EZCARRY® ADJUSTABLE HORIZONTAL SIPHON JET WITH ELONGATED FITTING – NO-HUB SERIES 236
ZE1201-H EZCARRY® ADJUSTABLE HORIZONTAL SIPHON JET WITH ELONGATED FITTING – HUB AND SPIGOT SERIES 238
ZF1201-N EZCARRY® HORIZONTAL SIPHON JET ONE-PIECE CARRIER – NO-HUB SERIES 240
ZN1201-N EZCARRY® ADJUSTABLE HORIZONTAL SIPHON JET – NO-HUB NARROW WALL SYSTEM (9-3/8" DEPTH FRONT TO BACK) 241
Z1202-N EZCARRY® ADJUSTABLE VERTICAL HIGH PERFORMANCE SIPHON JET – NO-HUB SERIES 242
Z1202-H EZCARRY® ADJUSTABLE VERTICAL HIGH PERFORMANCE SIPHON JET – HUB AND SPIGOT SERIES 244
Z1202-N-XB EZCARRY® BARIATRIC CARRIER – 1000 LB ADJUSTABLE VERTICAL SIPHON JET – NO-HUB SERIES 246
Z1202-N-XH EZCARRY® EXTRA HEAVY-DUTY 750 LB ADJUSTABLE VERTICAL SIPHON JET – NO-HUB SERIES 247
ZF1202-N EZCARRY® VERTICAL SIPHON JET ONE-PIECE CARRIER – NO-HUB SERIES 248

TABLE OF CONTENTS - BY SECTION

ZN1202-N EZCARRY® ADJUSTABLE VERTICAL SIPHON JET – NO-HUB NARROW WALL SYSTEM 249

Z1203-N ADJUSTABLE HORIZONTAL SIPHON JET – NO-HUB SERIES 250

Z1203-H ADJUSTABLE HORIZONTAL SIPHON JET – HUB AND SPIGOT SERIES 252

ZE1203-N ADJUSTABLE HORIZONTAL SIPHON JET WITH ELONGATED FITTING – NO-HUB SERIES 254

ZE1203-H ADJUSTABLE HORIZONTAL SIPHON JET WITH ELONGATED FITTING – HUB AND SPIGOT SERIES 256

Z1204-H ADJUSTABLE VERTICAL SIPHON JET – HUB AND SPIGOT SERIES 258

Z1204-N ADJUSTABLE VERTICAL SIPHON JET – NO-HUB SERIES 260

Z1207-N ADJUSTABLE HORIZONTAL HIGH ROUGH-IN SIPHON JET – NO-HUB 262

Z1208-N VERTICAL SIPHON JET WATER CLOSET SUPPORT SYSTEM – NO-HUB 263

Z1208-H VERTICAL SIPHON JET WATER CLOSET SUPPORT SYSTEM – HUB AND SPIGOT 264

Z1209-N VERTICAL OFFSET SIPHON JET WATER CLOSET SUPPORT SYSTEM – NO-HUB 265

ZN1209-N VERTICAL OFFSET SIPHON JET – NO-HUB NARROW WALL SYSTEM 266

Z1212 WALL CLOSET SUPPORT SYSTEM 267

Z1213-N 4" VERTICAL SIPHON JET WATER CLOSET SUPPORT SYSTEM – 2" OR 4" TOP VENT CLOSET FITTING ONLY (NO SUPPORT) 268

Z1216 90° DOUBLE NO-HUB SYSTEM FOR FLOOR MOUNTED BACK OUTLET WATER CLOSETS 269

Z1217 COUPLING TYPE SYSTEM – WALL URINAL/SERVICE SINK 270

Z1218 COUPLING TYPE SYSTEM – WALL URINAL/SERVICE SINK 271

Z1221 PLATE TYPE SYSTEM – WALL URINALS 272

Z1222 PLATE TYPE SYSTEM – WITH BEARING PLATE 272

Z1223 PLATE TYPE SYSTEM – TROUGH URINALS 273

Z1224 PLATE TYPE SYSTEM – LAVATORY WITH BACK 273

Z1225 PLATE TYPE SYSTEM – WATER COOLERS 274

Z1229 PLATE AND EXPOSED ARM – HEAVY SINKS 274

Z1231 CONCEALED ARM SYSTEM – WALL LAVATORIES 275

Z1231EZ UNIVERSAL LAVATORY CARRIER – WALL LAVATORIES 275

Z1236 EXPOSED ARM SYSTEM – WALL LAVATORIES/SINKS 276

Z1251 CONCEALED ARM SYSTEM – WALL SUPPORTED 277

Z1253 ADJUSTABLE CONCEALED ARM SYSTEM – WALL SUPPORTED 277

Z1255 EXPOSED ARM SYSTEM – WALL SUPPORTED 278

Z1256 EXPOSED ARM SYSTEM – WALL SUPPORTED 279

Z1257 EXPOSED ARM SYSTEM – WALL SUPPORTED 279

Z1258 EXPOSED ARM SYSTEM – WALL SUPPORTED 280

Z1259 PLATE SYSTEM – WALL SUPPORTED 281

Z1280 WOOD STUD SUPPORTED WATER CLOSET CARRIER – NO-HUB 282

Z1282 WOOD STUD SUPPORTED WATER CLOSET CARRIER – HUB AND SPIGOT 282

Z1283 WOOD STUD SUPPORTED WATER CLOSET CARRIER – PLASTIC PIPE 283

Z1284 CONCRETE FLOOR SUPPORTED WATER CLOSET CARRIER 283

Z1285 WOOD STUD SUPPORTED WATER CLOSET CARRIER 284

HYDRANTS

HYDRANTS - APPLICATION INDEX 286

Z1300 ECOLOTROL WALL HYDRANT – ENCASED, NON-FREEZE, ANTI-SIPHON, AUTOMATIC DRAINING 287

Z1305 WALL HYDRANT – ENCASED, NON-FREEZE 287

Z1310 ECOLOTROL WALL HYDRANT – EXPOSED, NON-FREEZE, ANTI-SIPHON, AUTOMATIC DRAINING 288

Z1315 WALL HYDRANT – EXPOSED, NON-FREEZE 288

Z1320XL ECOLOTROL CERAMIC DISC WALL HYDRANT – ENCASED, NON-FREEZE, ANTI-SIPHON, AUTOMATIC DRAINING 289

Z1320XL-EZ ECOLOTROL CERAMIC DISC WALL HYDRANT – ENCASED, NON-FREEZE, ANTI-SIPHON, AUTOMATIC DRAINING 289

Z1321XL ECOLOTROL CERAMIC DISC WALL HYDRANT – EXPOSED, NON-FREEZE, ANTI-SIPHON, AUTOMATIC DRAINING 290

Z1322XL-EZ ECOLOTROL CERAMIC DISC WALL HYDRANT – EXPOSED, NON-FREEZE, ANTI-SIPHON, AUTOMATIC DRAINING 290

Z1325 WALL HYDRANT – ENCASED, VARI-TEMP, NON-FREEZE 291

Z1327-EZ NARROW WALL HOT/COLD HYDRANT WITH MOUNTING BRACKETS – ENCASED, MODERATE CLIMATE 291

Z1330XL ECOLOTROL CERAMIC DISC WALL HYDRANT – ENCASED, ANTI-SIPHON, AUTOMATIC DRAINING, MODERATE CLIMATE 292

Z1332XL-EZ ECOLOTROL CERAMIC DISC WALL HYDRANT – ENCASED, ANTI-SIPHON, AUTOMATIC DRAINING, MODERATE CLIMATE 292

Z1333XL ECOLOTROL CERAMIC DISC WALL HYDRANT – EXPOSED, ANTI-SIPHON, AUTOMATIC DRAINING, MODERATE CLIMATE 293

Z1335 WALL HYDRANT – ENCASED, MODERATE CLIMATE 293

Z1350 NARROW WALL HYDRANT – ENCASED, MODERATE CLIMATE 294

Z1350-EZ NARROW WALL HYDRANT WITH MOUNTING BRACKETS – ENCASED, MODERATE CLIMATE 294

Z1360XL GROUND HYDRANT – ENCASED, FLUSH TYPE, NON-FREEZE 295

Z1365 GROUND HYDRANT – ENCASED, FLUSH TYPE, NON-FREEZE 296

Z1370 GROUND HYDRANT – ENCASED, HOSE STORAGE, NON-FREEZE 297

Z1375 GROUND HYDRANT – ENCASED, MODERATE CLIMATE, INTERIOR USE 297

Z1385 POST HYDRANT – EXPOSED HEAD, NON-FREEZE 298

Z1388XL ROOF HYDRANT – EXPOSED HEAD, NON-FREEZE 298

Z1390 POST HYDRANT – EXPOSED HEAD, NON-FREEZE 299

Z1395XL YARD HYDRANT – EXPOSED HEAD, NON-FREEZE 300

Z1397XL FLO-TROL YARD HYDRANT – EXPOSED HEAD, NON-FREEZE 300

CLEANOUTS

CLEANOUTS – APPLICATION INDEX 302

Z1400-BZ1 FLOOR CLEANOUT WITH "TYPE B" COVER AND EZ1™ TECHNOLOGY 303

Z1400-SZ1 BODY ASSEMBLY W/ "TYPE S" COVER AND EZ1™ TECHNOLOGY 304

Z1400 EXTRA HEAVY-DUTY "LEVEL-TROL" ADJUSTABLE FLOOR CLEANOUT 305

Z1400-K HEAVY-DUTY "LEVEL-TROL" ADJUSTABLE FLOOR CLEANOUT WITH ANCHOR FLANGE 306

Z1402 HEAVY-DUTY NON-ADJUSTABLE FLOOR CLEANOUT 307

Z1404 HEAVY-DUTY FLOOR ACCESS HOUSING 308

Z1406 HEAVY-DUTY ADJUSTABLE SPIGOT CLEANOUT 308

Z1440 CLEANOUT FERRULE WITH PLUG 309

Z1445 CLEANOUT TEE 309

Z1449 CLEANOUT FERRULE WITH PLUG 310

Z1454 ADJUSTABLE FLOOR CLEANOUT WITH FLASHING FLANGE 310

Z1456 DECK CLEANOUT 311

Z1457 FLOOR ACCESS COVER 311

Z1460 SQUARE WALL ACCESS PANEL 312

Z1461 SQUARE HINGED ACCESS PANEL 312

Z1462 SECURED WALL ACCESS PANEL 313

Z1463 ROUND SCORIATED ACCESS COVER 313

Z1464 WATER SUPPLY CONTROL BOX ASSEMBLY 314

Z1468 ACCESS COVER AND PLUG 314

Z1469 ROUND ACCESS COVER 315

Z1470 BRONZE CLEANOUT PLUG 315

Z1471 AIR INLET 316

Z1474 HEAVY-DUTY CLEANOUT HOUSING 316

Z1602 ADJUSTABLE ROUND MEDIUM-DUTY NICKEL BRONZE CLEANOUT 317

Z1612 ADJUSTABLE ROUND HEAVY-DUTY NICKEL BRONZE CLEANOUT 317

Z1615 CAST IRON LINE OR FLOOR CLEANOUT - NON-ADJUSTABLE 318

TABLE OF CONTENTS - BY SECTION

Z1616 CAST IRON LINE OR FLOOR CLEANOUT - NON-ADJUSTABLE 318

Z1666 SEAL OR TEST PLUG 319

Z1666-1 URINAL CLEANOUT 319

WATER HAMMER ARRESTORS

Z1700 SHOKTROLS 322

Z1712 ACCUMUTROL 322

STAINLESS STEEL DRAINS

STAINLESS STEEL DRAINS – APPLICATION INDEX 324

STAINLESS STEEL DRAINS – BUTT-WELD ENGINEERING DATA 324

Z1715 15" [381 MM] DIAMETER ROOF DRAIN 325

Z1717 SCUPPER DRAIN 325

Z1720 4" X 8" [102 MM X 203 MM] OPEN SIGHT DRIP DRAIN 326

Z1721 6" X 12" [152 MM X 305 MM] OPEN SIGHT DRIP DRAIN 326

Z1724 ROUND FUNNEL 327

Z1725 OVAL FUNNEL 327

Z1726 ADJUSTABLE MEDIUM DUTY FLOOR DRAIN WITH ROUND TOP 328

Z1727 ADJUSTABLE MEDIUM DUTY FLOOR DRAIN WITH SQUARE TOP 329

Z1730 9" [229 MM] DIAMETER HEAVY-DUTY SHALLOW TYPE FLOOR DRAIN 330

Z1731 9" [229 MM] DIAMETER HEAVY-DUTY MEDIUM DEPTH FLOOR DRAIN 330

Z1732 9-5/8" [244 MM] DIAMETER HEAVY-DUTY ADJUSTABLE FLOOR DRAIN 331

Z1735 12" [305 MM] DIAMETER HEAVY-DUTY FLOOR DRAIN 331

Z1736 12" [305 MM] DIAMETER EXTRA HEAVY-DUTY FLOOR DRAIN 332

Z1737 15" [381 MM] DIAMETER EXTRA HEAVY-DUTY FLOOR DRAIN 332

Z1739 PIT DRAIN 333

Z1740 BACKWATER VALVE 333

Z1745 FLOOR CLEANOUT WITH O-RING SEAL PLUG 334

Z1749 12" X 12" [305 MM X 305 MM] SANI-FLOR RECEPTOR WITH 4" [102 MM] SUMP DEPTH 335

Z1750 12" X 12" [305 MM X 305 MM] SANI-FLOR RECEPTOR WITH 6" [152 MM] SUMP DEPTH 336

Z1751 12" X 12" [305 MM X 305 MM] SANI-FLOR RECEPTOR WITH 8" [203 MM] SUMP DEPTH 337

Z1752 12" X 12" [305 MM X 305 MM] SANI-FLOR RECEPTOR WITH 10" [254 MM] SUMP DEPTH 338

Z1755 13-3/8" [340 MM] SQUARE SANI-FLOR RECEPTOR 6" [152 MM] SUMP WITH ADJUSTABLE CLAMP FRAME 339

Z1761 24-5/16" [618 MM] SQUARE KETTLE DRAIN WITH 8" [203 MM] SUMP DEPTH 339

Z1762 25" X 15-1/2" [635 MM X 394 MM] KETTLE DRAIN 340

Z1763 37-9/16" X 22-7/8" [954 MM X 581 MM] KETTLE DRAIN 341

SANI-FLOR RECEPTORS

SANI-FLOR RECEPTORS – MATERIAL SELECTION 344

SANI-FLOR RECEPTORS – OPTIONS AND VARIATIONS 344

Z1900 12" X 12" [305 MM X 305 MM] A.R.E. SANI-FLOR RECEPTOR WITH 6" [152 MM] SUMP DEPTH 345

Z1900-RL 12" X 12" X 6" [305 MM X 305 MM X 152 MM] REPLACEMENT FLOOR SINK LINER 346

Z1901 12" X 12" [305 MM X 305 MM] A.R.E. SANI-FLOR RECEPTOR WITH 8" [203 MM] SUMP DEPTH 347

Z1901-RL 12" X 12" X 8" [305 MM X 305 MM X 203 MM] REPLACEMENT FLOOR SINK LINER 348

Z1902 12" X 12" [305 MM X 305 MM] A.R.E. SANI-FLOR RECEPTOR WITH 10" [254 MM] SUMP DEPTH 349

Z1902-RL 12" X 12" X 10" [305 MM X 305 MM X 254 MM] REPLACEMENT FLOOR SINK LINER 350

Z1903 SANI-FLOR RECEPTOR INSTALLATION STABILIZER 350

Z1910 8" X 8" [203 MM X 203 MM] A.R.E. SANI-FLOR RECEPTOR WITH 6" [152 MM] SUMP DEPTH 351

Z1910-RL 8" X 8" X 6" [203 MM X 203 MM X 152 MM] REPLACEMENT FLOOR SINK LINER 352

Z1920 16" X 16" [406 MM X 406 MM] A.R.C. SANI-FLOR RECEPTOR WITH 7" [178 MM] SUMP DEPTH 353

Z1926 16" X 16" [406 MM X 406 MM] A.R.C. SANI-FLOR RECEPTOR WITH 12" [305 MM] SUMP DEPTH 354

Z1930 8" X 4" [203 MM X 102 MM] A.R.C. SANI-FLOR RECEPTOR WITH 4" [102 MM] SUMP DEPTH 355

Z1940 12" X 6" [305 MM X 152 MM] A.R.C. SANI-FLOR RECEPTOR WITH 8" [203 MM] SUMP DEPTH 356

Z1950 12" [305 MM] DIAMETER A.R.E. SANI-FLOR RECEPTOR WITH 8" [203 MM] SUMP DEPTH 357

Z1960 8" [203 MM] DIAMETER A.R.E. SANI-FLOR RECEPTOR WITH 6" [152 MM] SUMP DEPTH 358

Z1970 9" [229 MM] DIAMETER SHALLOW A.R.C. SANI-FLOR RECEPTOR WITH 3" [76 MM] SUMP DEPTH 359

Z1982 12" X 12" [305 MM] STAINLESS STEEL SANI-FLOR CAN WASH DRAIN WITH 8" [203 MM] SUMP DEPTH 360

Z1995 24" X 16" [610 MM X 406 MM] A.R.C. SANI-FLOR RECEPTOR WITH 17" [432 MM] SUMP DEPTH 360

TECHNICAL INFORMATION

TECHNICAL INFO - ZURN OUTLET PIPE CONNECTIONS 362

TECHNICAL INFO - TOP LOADING CLASSIFICATION 363

TECHNICAL INFO - ZURN MATERIALS AND FINISHES 364

GENERAL TERMS AND CONDITIONS 370

PRODUCT HIGHLIGHT

Patented

Z250H FOG-CEPTOR® INTERCEPTOR

Separating Itself from the Competition, FOG-ceptor Provides a Fast, Cost-Effective Solution When It Matters Most

When your interceptor fails, you need a fast, easy solution to get your business operating again. The Z250H FOG-ceptor interceptor is cost-effective, easy to maintain and ships within 24-48 hours. Backed by a 30-year warranty, the FOG-ceptor is made of durable fiberglass, and provides superior performance with less maintenance. Choose Zurn for innovative product solutions; a name you can trust for all your commercial plumbing needs.

Total package shipped and ready for installation

Optional: Electronic monitoring Smartpro® wireless system monitors grease and sediment with the push of a button

Versatile

- Reduces maintenance with smooth, fiberglass construction for fast, complete pump-outs and easy rinse down – SAVING TIME AND MONEY
- Replaces failed interceptors in buried and above ground applications including in-kitchen, exterior landscaped or traffic-rated areas, semi-recessed, and burial installations
- Retrofits fat, oil, or grease interceptors, with superior performance for the life of your building

Reliable

- Locally stocked for fast delivery- keeping your business running with minimal disruption
- Third-party certified to national performance standards PDI and UPC
- Reliable performance, backed by a 30-year guarantee

See page 200 for ordering information.

A SPEEDY SETUP

Sold complete and ready to install, EZ1 is an intuitive product that saves contractors time and money.

LONG-TERM DURABILITY

Whether cast iron or plastic, EZ1 is crafted to stand up against wear and tear over the product's lifecycle.

DESIGNED TO RUN LIKE CLOCKWORK

EZ1's integrated engineering, which includes an easy post-pour adjustment and tilt accessory package, delivers high-level functionality and requires minimal skill to install or maintain.

Introducing the EZ1™, It's About Time

Contractors have waited long enough for a floor drain that's easy to install and built for the long haul. Zurn's EZ1–available in cast iron and plastic–comes out of the box as a complete system, allows for post-pour adjustment with an integrated strainer, provides job-site flexibility and maintains ongoing reliability. Don't hesitate. Make the EZ choice. *Learn more at zurn.ca/ez1*

ZURN®

ZURN.CA

US 1.855.ONE.ZURN **CANADA** 1.877.892.5216

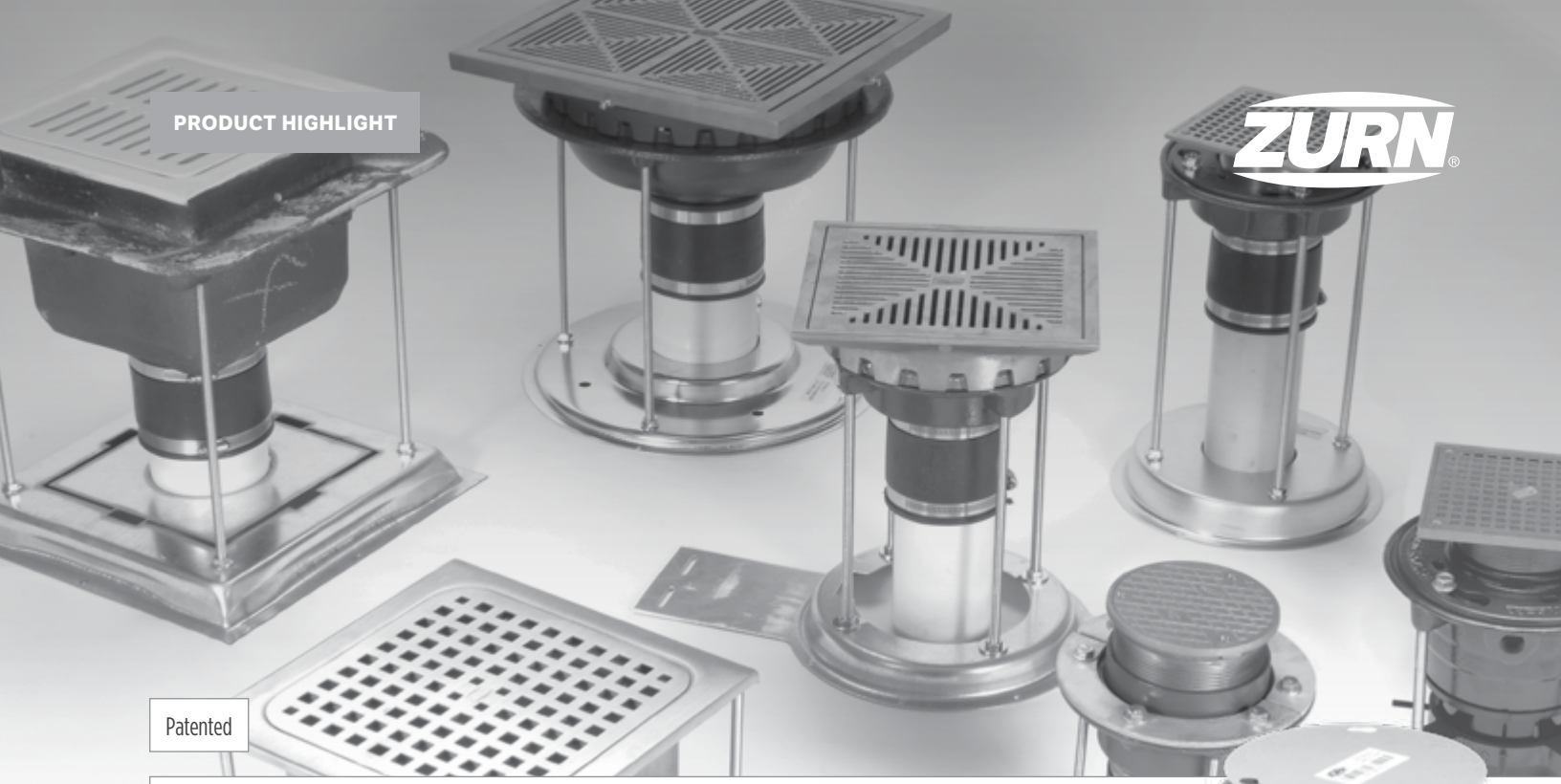

PRODUCT HIGHLIGHT

Patented

STABILIZER SOLUTIONS

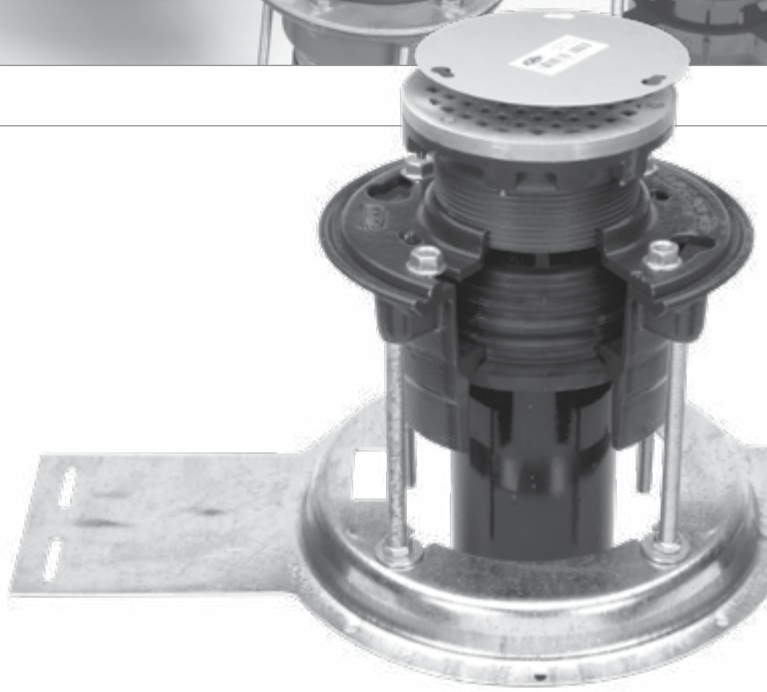

Stabilization Achieved with Zurn's Patented Solutions for Common Installation Concerns

Labor Savings

- System secures drain to stub-out pipe, sub floor or structural deck to prevent movement during installation process
- Pre-assembly to rough-in height allows for quick and easy job site placement
- Stabilizing system keeps drain secured in concrete, eliminating the need for fire stop, drypack, and grout to hold the drain in place

Versatility

- Z400-SR Stabilizing Ring for 8-3/8. floor drain for stub out installation
- Z1035 Stabilizer Plate for 8-3/8" floor drain and Z1400-K cleanout for sub floor installation
- Z1035-Q Stabilizer Plate for 8-3/8" floor drain and Z1400-K cleanout for structural deck installation
- Z1036 Stabilizer Plate for 12" and 15" sub floor installation
- Z1903 Stabilizer Plate for Z1900 A.R.E floor sink and Z1750 stainless floor sinks for sub floor installation

See pages 87, 180-181, 350 for ordering information.

PRODUCT HIGHLIGHT

Patent Pending

Z1231EZ UNIVERSAL LAVATORY CARRIER

Leave Your Carrier Code Book Behind

Z1231EZ-15-UN-42

Whether you're a prefab contractor or the project engineer, our EZ Lavatory Carrier easily adapts to any application on the jobsite.

The carrier features universal arms, an independent horizontal and vertical bracket system, and only two anchors per upright foot. You'll save steps without sacrificing strength behind the wall or compliance down the line.

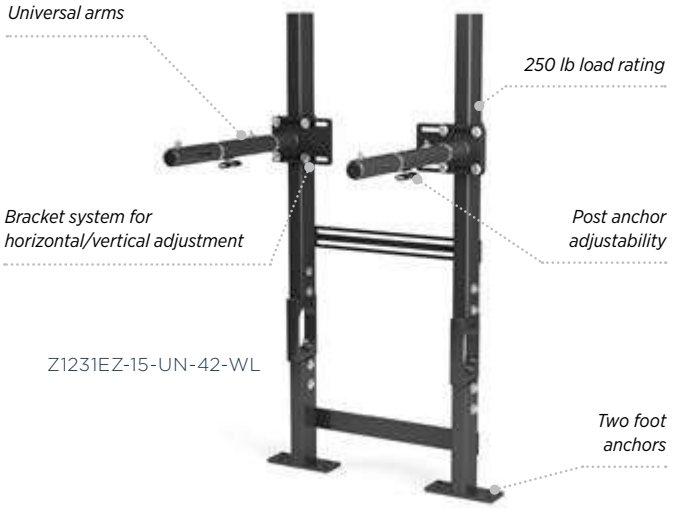

Meet All Project Requirements

No more paging through codes for compatibility or upfront staging. The carrier's universal arms allow contractors to adjust height in the field and assemble with virtually any sink application.

Set Up Horizontally or Vertically

This is the only carrier on the market with an independent bracket system you can position horizontally or vertically. The intuitive, flexible connection system works with the site's configuration—not the other way around.

Save Steps with Less Foot Anchors

Cut your install time and costs in half. Instead of four foot anchors, this carrier secures in place with two. The anchors support up to 250 lbs, while limiting floor penetrations and eliminating the need for relegging.

Take the labor out of your next lavatory installation. Specify your next project at inspec.zurn.com.

See page 275 for ordering information.

This symbol denotes a product that is engineered to reduce installation and rework time.
For additional product information, please visit zurn.com/laborsavings

PRODUCT HIGHLIGHT

Patented

ZURN TOP-SET® DECK PLATE

The -DP Option is Top of Class, with a Proven Feature Set That Will Save Time and Money

Labor Saving

- -DP option features ease of installation for quick job completion
- Entire roof drain assembly installed from topside of roof requiring only pipe connection installation underside roof
- Deck plate replaces the need for separate under deck clamps and roof-sump receivers
- Pipe connection is completed

Versatility

- Three size (-DP) for trouble-free fit 8″, 12″, and 15″ diameter drains
- Multiple slot arrangements to accommodate a variety of roof decks
- Constructed of 14-gauge steel with a corrosive-resistant finish

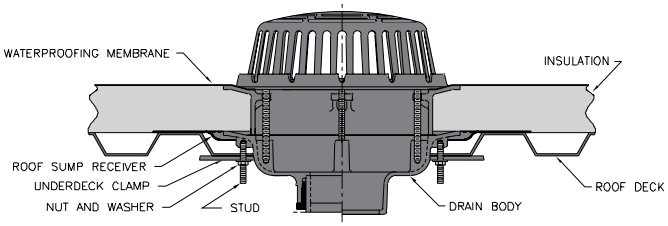

Old Way

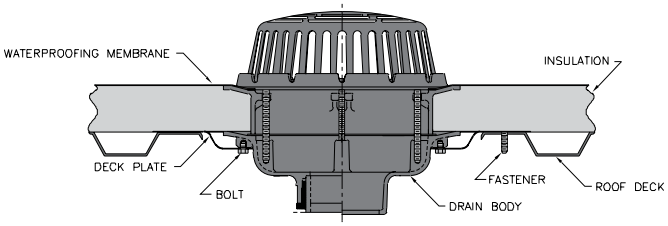

New Way

This symbol denotes a product that is engineered to reduce installation and rework time.
For additional product information, please visit zurn.ca/laborsavings

See (-DP) in the roof drain section for ordering information.

PRODUCT HIGHLIGHT

Z130 SIPHONIC ROOF DRAIN WITH DECK PLATE

Full-Bore Flow Achieved Siphonic Technology Provides a Higher Velocity and Flow Volume

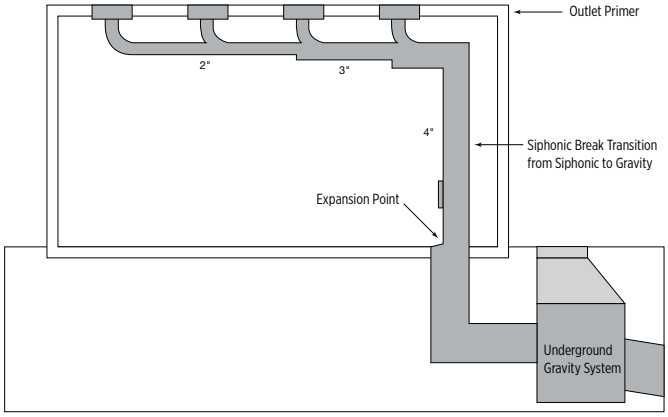

Siphonic Roof Drain System

How It Works

- Siphonic drainage can be achieved by adding/securing a highly engineered air baffle to the sump of a standard conventional drain
- This air baffle prevents vortex flow while restricting air from entering the vertical tailpipe and horizontal collector piping
- As water forces air out, a negative head pressure is created in the collector pipe and the water is sucked off the roof
- In a Zurn Siphonic Drain, full-bore flow occurs with 2″ of water above the air baffle
- Multiple drains can flow into a common horizontal collector pipe. This pipe eventually turns downward into a vertical downspout and transfers to conventional gravity drainage when below grade.
- When not operating under full flow, the system drains like a gravity system

Benefit Summary of a Zurn Siphonic System

- No pitch requirement in piping to induce flow
- Smaller pipe diameters get equal flow rates
- Flow Rates of Zurn Siphonic:
  2″ - 149 gpm, 3″ - 380 gpm, 4″ - 704 gpm
- Vertical stack placement is flexible
- No cleanouts necessary in system. Higher flow velocities help to clean pipes
- More efficient than conventional drainage
- Use of recycled materials

See page 42 for ordering information.

This symbol denotes a product that is engineered to reduce installation and rework time.
For additional product information, please visit zurn.ca/laborsavings

Z130 SIPHONIC ROOF DRAIN WITH DECK PLATE

Components of a Siphonic System

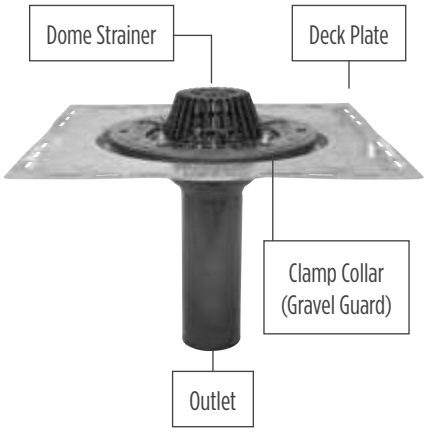

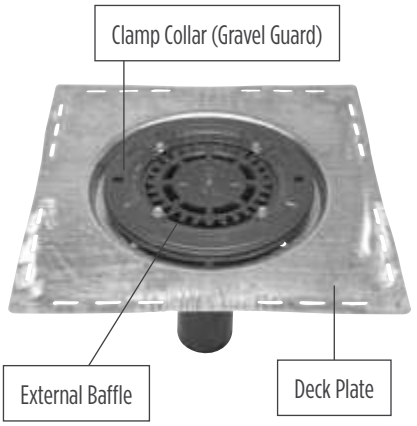

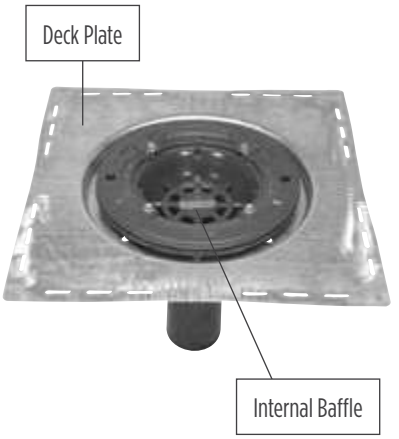

Plan a Custom Siphonic System

To determine the number of drains:

1. Select location of the drains on the roof.
2. Select the location of the down pipe.
3. Horizontal collector pipe length should not exceed 20 times the building height.
4. Maximum distance between SDS drains with a common collector pipe is 65 feet.
5. Use the chart below to select the number of drains based on square feet and rainfall data.

Note: This tool can be used for a quick estimate for number of drains - must have system designed by Zurn for complete piping layout.

Siphonic Design Questions

Please fill out the questions below along with building plans including roof layout and building sections as a DWG file.

1. What kind of roof construction is it? (details, surface)
2. What are the measurements of the sections of the roof?
3. Is there a specific location the roofer would like the drains to be placed?
4. Will a rainwater harvesting system be used on this project?
5. What is the rainfall data for the area?
6. Do you have ground plans for the building sections?
7. Where do you want the down pipe located?
8. What material of piping are you using? (PVC, cast iron)
9. What is the minimum height of the horizontal drainage pipe?
10. Are there any specific areas where drains cannot be located?
11. Are overflow drains required?

SDS with Air Baffle, Machined Collar Clamp, and Zurn Dome

ROOF DRAIN VERTICAL REQUIREMENT FOR HORIZONTAL ROOF AREAS AT VARIOUS RAINFALL RATES											
LEADER SIZE		HOURLY RAINFALL IN INCHES									
PIPE SIZE (IN.)	OPEN AREA (SQ. IN.)	1	1.5	2	2.5	3	4	5	6	7	8
		TOTAL SQUARE FOOTAGE COVERED PER DRAIN*									
2	2.66	14,188	9,458	7,094	5,675	4,729	3,547	2,837	2,364	2,026	1,773
3	6.33	36,614	24,409	18,307	14,645	12,204	9,153	7,322	6,102	5,230	4,576
4	12.17	67,736	45,157	33,868	27,094	22,578	16,934	13,547	11,289	9,676	8,467

*Theoretical value based on ideal condition of our tests in the University of Munich (without safety factor).

This symbol denotes a product that is engineered to reduce installation and rework time.
For additional product information, please visit zurn.ca/laborsavings

See page 42 for ordering information.

PRODUCT HIGHLIGHT

GREEN ROOFING DRAINAGE SOLUTIONS

It's Easy Being Green

Having proper drainage on a green roof is a critical aspect of the system. If the system is not able to drain properly, it can negatively impact the vegetation due to over-saturation of the soil. As the soil takes on excessive amounts of water, it continues to add weight to the roofing structure. This added load has the potential to compromise the structural integrity of the roof. In order to prevent these situations from occurring, the roof drain must allow adequate flow through the drain at all times.

Performance

Stainless steel perforated extension allows for optimal flow into the roof drain while simultaneously keeping debris out.

Ease of Maintenance

Removable lid allows for easy routine maintenance.

Versatility

Customizable enclosures guarantee the roof drain aligns with the green roof surface and offer an aesthetically appealing finish to the roof environment.

Flexibility

Simplify the installation process by customizing the order to ship the perforated extension after the drain has been installed

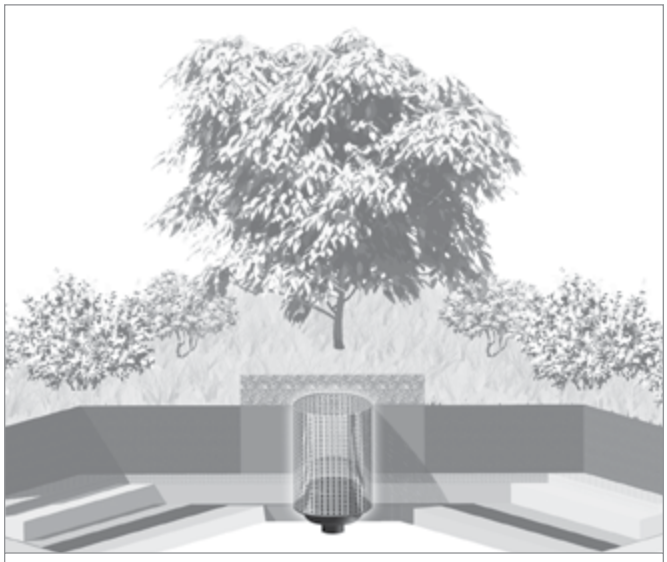

Z110 Green Roof Drain with Enclosure Height for Intensive Green Roof Systems

See pages 33-36 for ordering information.

For additional product information, please visit www.zurn.ca

PRODUCT HIGHLIGHT

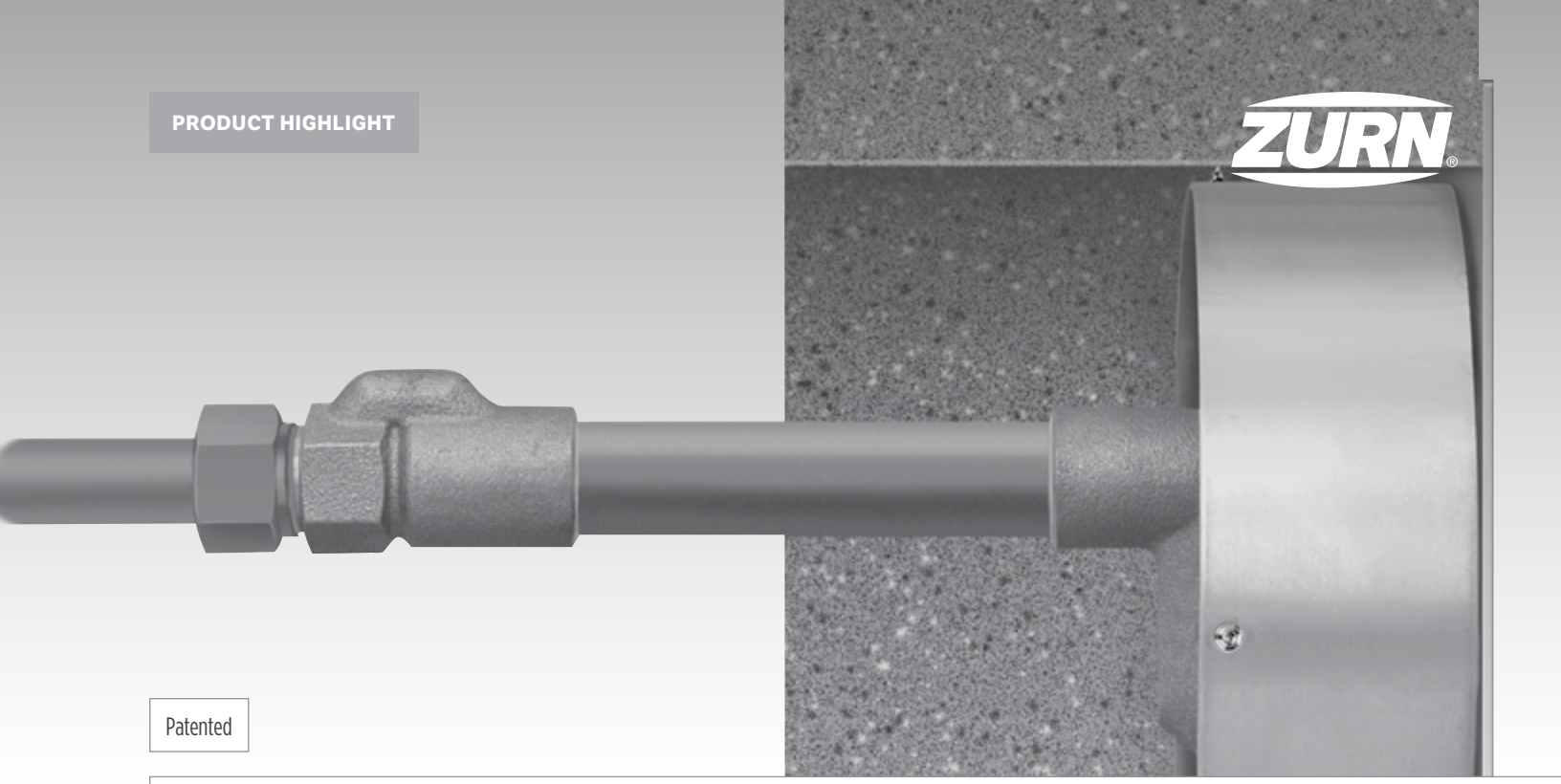

Patented

A PERFECT FIT: Z1322XL-EZ AND Z1332XL-EZ ECOLOTROL™ WALL HYDRANTS

For Installation in Tilt-Up Construction

The 7-7/8″ diameter sleeve of the Zurn Z1322-EZ and Z1332-EZ Ecolotrol wall hydrants is designed exclusively for tilt-up installations. They have many benefits over square or rectangular hole type installations, including:

- Coring an 6″ diameter hole in the wall results in time and labor savings over trying to hammer drill a square or rectangular hole
- Coring makes a smooth and clean cut opening without damaging the wall or chipping the interior wall surface, whereas a square or rectangular hole can crack or damage the precast wall during hammer drilling
- Smooth interior wall surface is easy to insulate (if required)
- No materials or labor are required to repair the interior wall surface
- Round sleeves have holes that allow the installer to secure them to the wall with hardware
- Wide box face fit flush with the wall surface and covers the 6″ diameter hole
- Square box face flanges provide surface areas that seal and waterproof (if required)
- Tight, secure fit delivers vermin-proof installation

Z1322XL-EZ and Z1332XL-EZ Ecolotrol lead-free wall hydrants offer a safe, reliable solution that exceeds federal requirements.

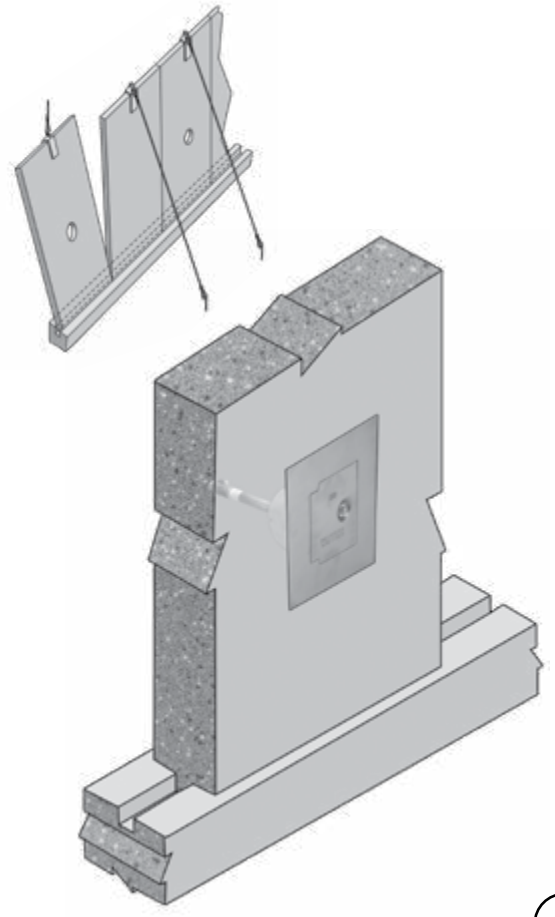

XL LEAD FREE

See pages 290, 292 for ordering information.

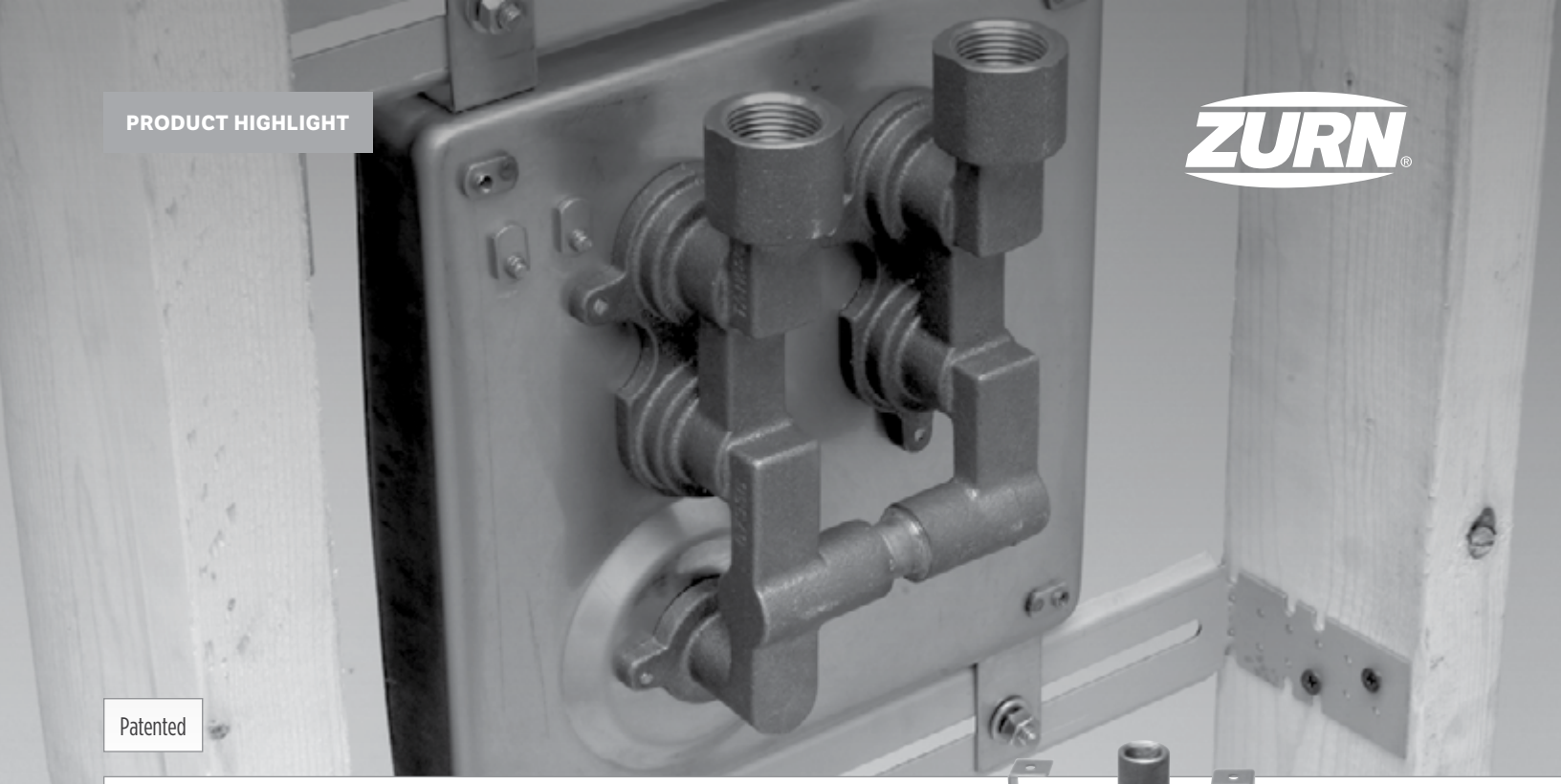

PRODUCT HIGHLIGHT

Patented

EZ HYDRANTS: Z1327-EZ, Z1350-EZ, Z1320XL-EZ

Ease of Installation Paired with Excellent Durability

Z1327-EZ and Z1350-EZ

- All fabricated stainless steel constructed boxes provide a long-lasting finish
- Mounting braces provide fast, rigid installation of the hydrant box assembly
- Hydrant box and braces are designed to fit inside a standard 2″ x 4″ stud wall on 16″ or 24″ centers
- Mounting braces allow hydrant box assembly to be easily adjusted left or right to a desired location, and locked in place prior to finished wall placement
- Mounting braces eliminate the use of additional material on a job site to form and adjust the braces to fit within the wall and accommodate the hydrant

Z1320XL-EZ

XL LEAD FREE

- All fabricated stainless steel constructed box provides a long-lasting finish
- Hydrant box is designed to fit in one standard modular brick course
- Wide flange surface hides the wall rough-in opening after installation
- Hydrant cover opens downward with a full 180° rotation
- Optional wall clamp assembly provides rigidity and helps secure hydrant box to the wall
- Lead-free hydrant provides a safe, reliable solution that exceeds federal requirements

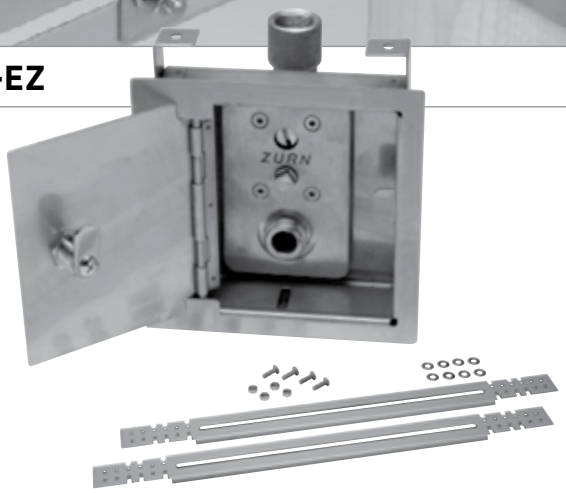

Z1350-EZ encased, moderate climate wall hydrant for narrow wall installation with mounting bracket hardware

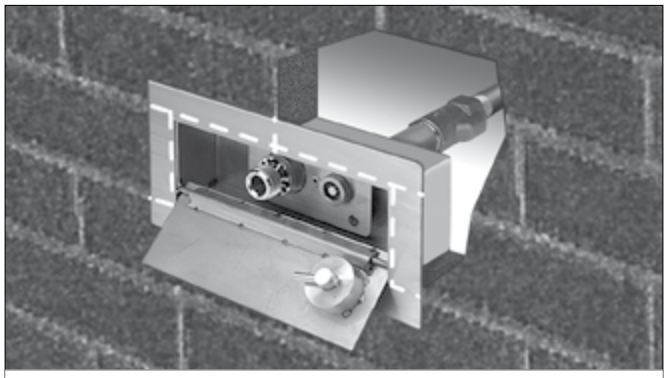

Z1320XL-EZ encased Ecolotrol™ lead-free "anti-siphon," automatic draining wall hydrant installed in one standard masonry course

See pages 289, 291, and 294 for ordering information.

PRODUCT HIGHLIGHT

ZURN BARIATRIC PROVIDES SUPERIOR PERFORMANCE

Zurn Meets Health Care Challenges

Million of adults in the United States that are classified as overweight, with over half of that number being considered obese. Nine million are considered to be extremely obese or bariatric patients. Due to the increasing number of bariatric patients, there has been a spike in gastric bypasses, stomach reductions, and banding operations which has led to an increase in the amount of bariatric patients in hospitals.

In order to help meet the needs of special bariatric care, Zurn has developed both bariatric designed toilets and support carriers for hospital restrooms. With paired performance options available up to 1,000 pounds Zurn knows how support this growing concern.

Z5681
750 - 1,000 lb Elongated
Wall Hung Water Closet

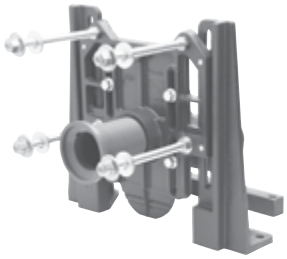

Z1201-XH and Z1202-XH
Extra Heavy Carrier Systems
Support up to 750 lb

Z5691
1,000 lb Rating Bariatric
Wall Hung Water Closet

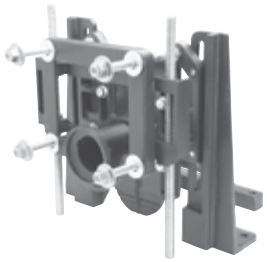

Z1201-XB and Z1202-XB
Bariatric Carrier Systems
Support up to 1000 lb

See pages 234-247 for ordering information.

ZURN BARIATRIC PROVIDES SUPERIOR PERFORMANCE

Z5681

750 - 1,000 lb Elongated Wall Hung Water Closet

- Installation of the paired carrier and closet guarantee performance and safeguard against catastrophic failure from using different manufacturer's carrier and closet
- 3-year Zurn One System warranty
- 1.6 gpf, siphon jet type flush
- Full compliance with ASME/ANSI A112.19.2 flush performance testing
- 1,000 lb load rating in accordance with ASME/ANSI A112.19.2
- Manufactured of type 304 stainless steel (optional brushed stainless steel finish) seamless construction with antimicrobial powder-coated exterior surface
- 1-1/2" top inlet spud connection
- Antimicrobial polypropylene elongated, self-centering, non-shift seat design with integral molded bumpers

Z1201-XH and Z1202-XH

Extra Heavy Carrier Systems Support up to 750 lb

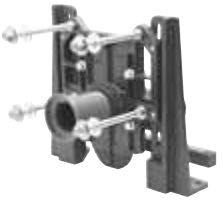

Patented

- Provides paired performance up to 750 lb behind the wall and 500 lb at the closet fixture
- Maintains additional support and a degree of safety, regardless of the restroom location
- Wall hung closet fixture provides a sanitary environment by keeping the toilet fixture off the floor
- Designed for both new and retrofit applications and maintains the use of 5/8" studs that are standard for all wall hung fixture installations
- Specify the Z1201-XH for horizontal extra heavy-duty carrier needs and the Z1202-XH for vertical extra heavy-duty carrier requirements

Z5691

1,000 lb Rating Bariatric Wall Hung Water Closet

- Installation of the paired carrier and closet guarantee performance and safeguard against catastrophic failure from using different manufacturer's carrier and closet
- 3-year Zurn One System warranty
- Full compliance with ASME/ANSI A112.19.2 flush performance testing
- 1,000 lb load rating in accordance with ASME/ANSI A112.19.2
- 1.6 gpf, siphon jet type flush
- Extra large bariatric-sized seating area for enhanced patient comfort
- Manufactured of type 304 stainless steel (optional brushed stainless steel finish) seamless construction with antimicrobial powder-coated exterior surface
- 1-1/2" top inlet spud connection
- Antimicrobial polypropylene elongated, self-centering, non-shift seat design with integral molded bumpers

Z1201-XB and Z1202-XB

Bariatric Carrier Systems Support up to 1,000 lb

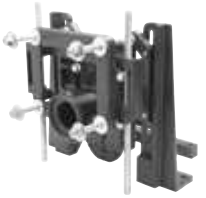

Patented

- The Bariatric Room Design Advisory Board (BRDAB), created by The Hill-Rom Company, has targeted bariatric room maximum design for 1,000 lb for chairs, beds, and toilet fixtures
- Wall hung closet fixture provides a sanitary environment by keeping the toilet fixture off the floor
- Designed for new and retrofit applications and maintain the use of 5/8" studs that are standard for all wall hung fixture installations
- Integral finishing frame provided to square up the finished wall, reduce installation time, and add support
- Specify the Z1201-XB for horizontal and the Z1202-XB for vertical Bariatric Carrier requirements

See pages 234-247 for ordering information.

PRODUCT HIGHLIGHT

Z1222-CB CARRIER BANK

Designed to Speed Up Your Installation

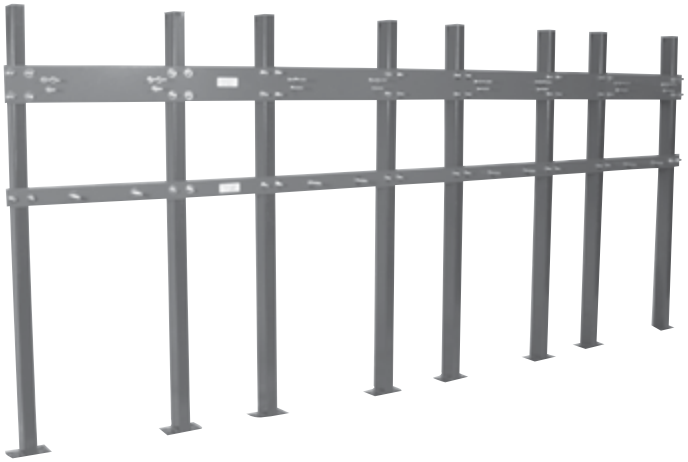

Multiple station plate system provides an extended length plate fabricated with exact center-to-center locations to accommodate a bank of multiple urinals. Custom-length plates are specific to job requirements and are provided with loose uprights and boxed mounting hardware and studs. Ideally suited for prefabricated applications.

The following information is necessary when specifying the carrier bank:

- Fixture manufacturer, model number, and quantity of fixtures
- Center-to-center spacing of urinals
- Handicap fixture quantity and location (if applicable)
- Wall thickness

Note: Custom carrier banks are available for all Zurn plate type systems.

See page 272 for ordering information.

CUSTOMER GUIDE INSTRUCTIONS

Each product section in this catalog is introduced by a cover page showing a representation of products. Additional information varies by product section, but generally consists of the following:

APPLICATION INDEX	General guide to the characteristics of the products and their design.
PRODUCT COMPLIANCE	List of standards and approvals that apply.
PRODUCT DESCRIPTIONS	Each product page contains a product photograph, engineering dimensional drawing, engineering specification, pricing chart, available outlet types and sizes, and the appropriate prefix and suffix options.
TECHNICAL DATA	General overview of product characteristics, assemblies, and installation data.

TYPICAL PRODUCT PAGE NAVIGATION

Product Heading

Product Photo

Dimensional Chart

Prefix/Model # - Material/Finish/Body Type

Strainer Designation - Size/Type

Outlet - Size/Type

Engineering Line Drawing

Section Marker Tab

Suffix - Option List

Z415 BODY ASSEMBLY WITH HEEL-PROOF "TYPE B" STRAINER

ENGINEERING SPECIFICATION

ZURN ZN415B floor and shower drain, Dura-Coated cast iron body with bottom outlet, combination invertible membrane clamp and adjustable collar with seepage holes, and "TYPE B" polished nickel bronze, light-duty strainer.

NOTES

For other available strainer variations see Z400 Strainer Series. Add price for required strainer to "BODY ONLY" price in chart. Specify type and size required.

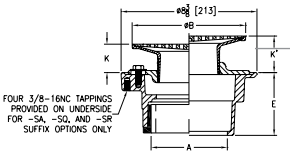

Strainer Designation	Dimensions in Inches [mm]						Str. Open Area (Sq. In. [cm²])	App. Wt. Lbs. [Kg]
	A Pipe Size	B Str. Dia.	K		K'			
			Min.	Max.	Min.	Max.		
-5B	2 [51], 3 [76]	5 [127]	1 [25]	1-1/2 [38]	1-3/32 [27]	2-1/4 [57]	6-1/4 [40]	11 [5]
-6B	2 [51], 3 [76], 4 [102]	6 [152]		1-25/32 [45]	1-13/32 [36]	2-17/32 [64]	9 [58]	13 [6]
-7B		7 [178]		2-1/8 [54]	1-23/32 [44]	2-7/8 [73]	12 [77]	14 [6]
-8B	3 [76], 4 [102]	8 [203]	1-5/32 [29]		1-3/4 [44]		19 [122]	16 [7]
	6 [152]							18 [8]
-10B		10 [254]	1-7/16 [37]	2-1/2 [64]	2 [51]	3-1/4 [83]	23 [148]	22 [10]

PREFIXES	DESCRIPTION	STRAINER DESIG.	PIPE SIZE	LIST PRICE
ZN415*	D.C.C.I. Body Assembly with Polished Nickel Bronze Top	-5B	2", 3"	363.00
		-6B	2", 3", 4"	444.00
		-7B	2", 3", 4"	511.00
		-8B	3", 4"	640.00
			6"	1,050.00
		-10B	6"	1,284.00
ZB415	D.C.C.I. Body Assembly with Polished Bronze Top	-5B	2", 3"	345.00
		-6B	2", 3", 4"	401.00
		-7B	2", 3", 4"	485.00
		-8B	3", 4"	606.00
			6"	1,016.00
		-10B	6"	1,239.00
Z415	D.C.C.I. Body Assembly ONLY (add "-L/Top" to product sku)	No Strainer	2", 3", 4"	145.00
			6"	555.00

OUTLETS (SPECIFY PIPE SIZE IN INCHES AND TYPE OF OUTLET)				
OUTLET	TYPE	PIPE SIZE/ OUTLET TYPE	E BODY HT. DIM.	ADD
IC	Inside Caulk	2IC, 3IC, 4IC	4-13/16"	N/C
IG	Inside Gasket	2IG, 3IG, 4IG	4-13/16"	N/C
IP	Threaded	2IP	2-7/16"	59.00
		3IP	2-3/4"	59.00
		4IP	2-13/16"	59.00
		6IP	2-7/8"	59.00
NH	No-Hub	2NH, 3NH, 4NH	3-13/16"	N/C
NL	Neo-Loc	2NL, 3NL, 4NL	3-7/8"	N/C

SUFFIXES			ADD
-AA	All Acid Resisting Epoxy		196.00
-AR	Acid Resisting Epoxy Coated Cast Iron		127.00
-C	Clamp Collar for -90 Side Outlet		112.00
-CP	Chrome-Plated Bronze Top		19.00
-DP	Decorative Polished Top		127.00
-EF	3/8" Extension Frame		223.00
-G	Galvanized Cast Iron		148.00
-HD	Heavy-Duty Slotted Grate (ZN 5" and 6" sizes only)		154.00
-OF	Oval Funnel - 6" thru 10" Strainers Only (See Z329-7)	ZB	273.00
		ZN	316.00
-P	Trap Primer Connection (Specify 1/2" or 3/4")		N/C
-PC	Protective Cover		47.00
-SA	Stabilizer Assembly (See Z1035)		–
-SQ	Stabilizer Q-deck (See Z1035-Q)		–
-SR	Stabilizer Ring (See Z400-SR)		–
-TC	Neo-Loc Test Cap Gasket (2" thru 4" NL Bottom Outlet Only)		17.00
-U	1"-3" High Extension Adapter (See Z400-U)	D.C.	104.00
		Galv.	229.00
	For each additional 1" above 3"		73.00
-V	Backwater Valve (Not Available with -Y)		285.00
-VP	Vandal-Proof Secured Top		42.00
-W	Winter Closure Plug		273.00
-Y	Sediment Bucket (Not Available with -V)		81.00
-4	4" Diameter Funnel	Z	133.00
		ZB	273.00
		ZN	316.00
-18	Leveling Ring (See Z400-18)		–
-90	90° Threaded Side Outlet Body (2" and 3" Only)		164.00

*Regularly furnished unless otherwise specified.

This symbol denotes a product that is engineered to reduce installation and rework time.

For Additional Product Information, Please Visit www.zurn.com

91

INTRO
ROOF DRAINS
FLOOR DRAINS
T, P, BW VALVES
INTERCEPTORS
CARRIERS
HYDRANTS
CLEANOUTS
WHA
SS DRAINS
FAB SS DRAINS
SANI-FLOR
TECH INFO

This symbol denotes a product that is engineered to reduce installation and rework time.

For additional product information, please visit zurn.ca/laborsavings

ABBREVIATIONS USED IN THIS CUSTOMER GUIDE

A.B.S.	Acrylonitrile Butadiene Styrene
APP.	Approximate
APPROX.	Approximate
A.R.C.	Acid Resisting Epoxy
A.R.E.	Acid Resisting Enamel
AUX.	Auxiliary
BRZ.	Bronze
C.I.	Cast Iron
C.O.	Cleanout
CONN.	Connection
D.C.	Dura-Coated
DIA.	Diameter
DIM.	Dimension
DT	Decorative Top
D.C.C.I.	Dura-Coated Cast Iron
EXT.	Extension
GALV.	Galvanized
GSKT.	Gasket
G.P.M.	Gallons Per Minute
HT.	Height
IN.	Inch
LB	Pounds
LG.	Long
MED.	Medium
N.A.	Not Applicable
N.B.	Nickel Bronze
N/C	No Charge
P.B.	Polished Bronze
PLN.	Plain
POA	Price on Application
POL.	Polished
P.V.C.	Polyvinylchloride
RAD.	Radius
SGL.	Single
SQ. IN.	Square Inches
S.S.	Stainless Steel
STL. ST.	Stainless Steel
STR.	Strainer
THD.	Threaded
V.P.	Vandal-Proof
W/	With
WT.	Weight
XH	Extra Heavy

This symbol denotes a product that is engineered to reduce installation and rework time.
For additional product information, please visit zurn.ca/laborsavings

NOTES

SD1021

ROOF DRAINS

ROOF DRAIN - PRODUCT COMPLIANCE 24

ROOF DRAIN - GENERAL INFORMATION 24

ROOF DRAIN - APPLICATION INDEX 24

Z100 Z100 FLOFORCE™ HIGH PERFORMANCE ROOF DRAIN - LOW SILHOUETTE DOME 25

Z100 15" [381 MM] DIAMETER MAIN ROOF DRAIN WITH LOW SILHOUETTE DOME 26

Z101 HIGH CAPACITY 20" [508 MM] DIAMETER MAIN ROOF DRAIN WITH LOW SILHOUETTE DOME 27

100C 15" [381 MM] DIAMETER DEEP SUMP DUAL OUTLET ROOF DRAIN - LOW SILHOUETTE DOME 28

Z104 15" [381 MM] DIAMETER DEEP SUMP ROOF DRAIN WITH LOW SILHOUETTE DOME 29

Z105 CONTROL-FLO™ ROOF DRAIN WITH PARABOLIC WEIR 30

Z107 20" [508 MM] WIDE DECK FLANGE ROOF DRAIN 31

Z108 15" [381 MM] DIAMETER DECK RECEPTOR DRAIN 32

Z110 15" [381 MM] GREEN ROOF DRAIN WITH PERFORATED SCREEN ASSEMBLY, AND REMOVABLE COVER WITH LIFT HANDLE 33

Z110-AI GREEN ROOF DRAIN WITH PERFORATED SCREEN ASSEMBLY, REMOVABLE COVER WITH LIFT HANDLE, AND AUXILIARY INLET 34

ZF110-R 15" [381 MM] GREEN ROOF BOX - PERFORATED SCREEN ASSEMBLY 35

ZF110-S GREEN ROOF BOX - PERFORATED SCREEN ASSEMBLY, REMOVABLE COVER 36

Z111 12" [305 MM] DIAMETER FLAT DECK ROOF DRAIN FOR METAL DECKS 36

Z121 12" [305 MM] DIAMETER ROOF DRAIN LOW SILHOUETTE DOME 37

ZCF121 12" [305 MM] DIAMETER ROOF DRAIN 38

Z122 12" [305 MM] DIAMETER DECK RECEPTOR DRAIN 39

Z125 8-3/8" [203 MM] DIAMETER ROOF DRAIN LOW SILHOUETTE DOME 40

Z127 8-1/2" [216 MM] DIAMETER DECK RECEPTOR DRAIN 41

Z130 8" [203 MM] MAIN ROOF DRAIN 42

ZCF130 8" [203 MM] CONTROL ROOF DRAIN 42

Z131 14-9/32" [363 MM] DIAMETER SIPHONIC OVERFLOW ROOF DRAIN 43

Z135-6 8" [203 MM] MAIN ROOF DRAIN FOR CONVENTIONAL INVERTED PROMENADE DECK ROOF 43

Z150 14" [356 MM] SQUARE TOP PROM-DECK DRAIN WITH HEEL-PROOF GRATE AND ROTATABLE FRAME 44

Z154 12" [305 MM] SQUARE TOP PROM-DECK DRAIN WITH HEEL-PROOF GRATE AND ROTATABLE FRAME 45

Z158 10" [254 MM] SQUARE TOP PROM-DECK DRAIN WITH HEEL-PROOF GRATE AND ROTATABLE FRAME 46

Z160 135° SCUPPER DRAIN 47

Z161 3" X 10" [76 MM X 254 MM] OBLIQUE SCUPPER DRAIN 47

Z163 15" [381 MM] DIAMETER COMBINATION MAIN ROOF AND OVERFLOW DRAIN WITH LOW SILHOUETTE DOMES AND DOUBLE TOP-SET® DECK PLATE 48

Z164 12" [305 MM] DIAMETER COMBINATION MAIN ROOF AND OVERFLOW DRAIN WITH LOW SILHOUETTE DOMES AND DOUBLE TOP-SET® DECK PLATE 49

Z165 8-3/8" [203 MM] DIAMETER COMBINATION MAIN ROOF AND OVERFLOW DRAIN WITH LOW SILHOUETTE DOMES AND DOUBLE TOP-SET® DECK PLATE 50

Z180 4-1/2" [114 MM] DIAMETER CORNICE DRAIN WITH BOTTOM OUTLET 50

Z181 6" [152 MM] DIAMETER CORNICE DRAIN WITH BOTTOM OUTLET 51

Z182 4-1/2" [114 MM] DIAMETER CORNICE DRAIN WITH 90° OUTLET 51

Z185 6" [152 MM] DIAMETER CORNICE DRAIN WITH 90° OUTLET 52

Z187 6" X 7" [152 MM X 178 MM] OR 8" X 12" [203 MM X 305 MM] OBLIQUE SCUPPER DRAIN 52

Z189 5" X 6" X 11" [127 MM X 152 MM X 279 MM] SCUPPER DRAIN 53

Z190 VERTICAL EXPANSION JOINT 53

Z191 5" X 4" X 24" [127 MM X 102 MM X 610 MM] DOWNSPOUT BOOT 54

Z191-RD 4" X 18" [127 MM X 457 MM] DOWNSPOUT BOOT 54

Z192 4" X 3" [102 MM X 76 MM] DOWNSPOUT BOOT 55

Z193 VANDAL-PROOF HOODED VENT CAP 55

Z195 VENT STACK FLASHING SLEEVE 56

Z196 VENT STACK FLASHING SLEEVE 56

Z197 RISER SLEEVE 57

Z198 PARAPET SCUPPER SLEEVE 57

Z199 DOWNSPOUT NOZZLE 58

ZF199 CHAMELEON DOWNSPOUT NOZZLE WITH FLAPPER 59

Z199-DC DOWNSPOUT COVER 60

ZF7000 FLOW SENSOR 60

ROOF DRAIN - PRODUCT COMPLIANCE

Zurn roof drains are constructed of high quality materials and, in general, are designed to meet the requirements of ASME Standard A112.6.4 (revision and redesignation of ANSI A112.21.2M).

For verification of a selected roof drain, contact your local Zurn Sales Representative.

ROOF DRAIN - GENERAL INFORMATION

Zurn roof drains are comprised of three basic components: a body (sump), a combination membrane flashing clamp/gravel guard, and a dome strainer. Two of Zurn's roof drains are the Z100-DE and Z100-DR, shown below. These illustrate the basic components and options: the adjustable extension -DE (Deck Extension), -DR (Drain Riser), and Top-Set Roof Deck Plate (-DP).

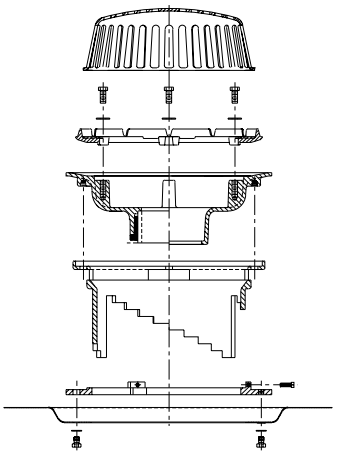

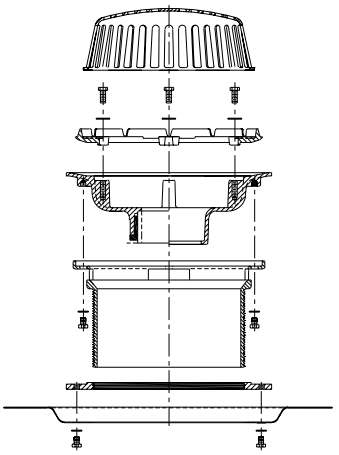

Note: Neo-Loc outlets are not recommended for roof drain applications due to the watertight integrity of the Neo-Loc connection to the leader pipe being dependent upon adequate leader pipe support and accurate perpendicularity of leader pipe into Neo-Loc gasket.

ROOF DRAIN - APPLICATION INDEX

Roof drain selection should be made with a specific type of roof construction in mind. The many types and sizes of drains offered by Zurn, coupled with a wide array of available options, provide you with a roof drain for all applications.

APPLICATION	RECOMMENDED ROOF DRAIN
Main Roof	Z100, Z100-90, Z104, Z105, Z107, Z108
High Capacity	Z101
Water Insulated Main Roof	Z100-AW, Z100-W, Z100-89
Green Roof	Z110, Z110-AI
Medium Area	Z111, Z121, Z121-90, Z122
Inverted Membrane Roof Deck	Z100-85, Z121-85, Z125-85
Overflow	Z108, Z122, Z127, Z163, Z164, Z165
Penthouse and Small Area	Z125, Z125-90, Z127
Promenade and Patio	Z150, Z154, Z158
Parapet Scupper	Z160, Z161, Z187, Z189
Canopy and Terrace	Z180, Z181, Z182, Z185
Expansion Joints	Z190
Downspout Boot	Z191, Z191-RD, Z192
Vent Cap	Z193
Flashing Sleeves and Scupper Sleeves	Z195, Z196, Z197, Z198
Downspout Nozzle	Z199, Z199-DC

Z100 Z100 FLOFORCE™ HIGH PERFORMANCE ROOF DRAIN - LOW SILHOUETTE DOME

ENGINEERING SPECIFICATION

FLOFORCE™ High efficient flow performing roof drain that is engineered to evacuate water off of roof structure by incorporating a smooth funnel shaped interior surface, providing a seamless transition to outlet connection and eliminating internal obstructions. Complete with Dura-Coated cast iron body with combination membrane flashing clamp/gravel guard and low silhouette Poly-Dome. Flashing clamp/gravel guard provided to prevent debris from entering the drain while allowing water to immediately pass through at zero head level. Poly-dome designed to maximize effective open area and promote efficient flow. (Refer to www.zurn.ca for flow curves)

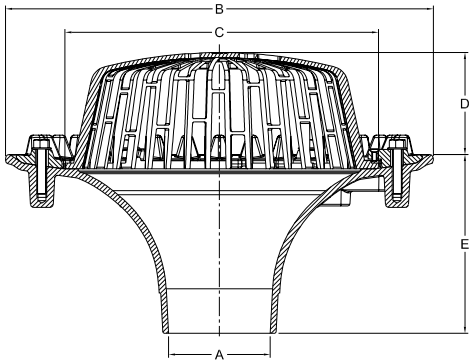

1x5 Offset Pipe Outlet		2x5 Offset Pipe Outlet		4ft Vertical Pipe Outlet	
Roof Ponding Depth (in.)	Flow Rate (GPM)	Roof Ponding Depth (in.)	Flow Rate (GPM)	Roof Ponding Depth (in.)	Flow Rate (GPM)
1.00	79.31	1.00	76.30	1.00	81.68
2.00	306.65	2.00	306.58	2.01	314.14
3.04	376.36	3.03	446.73	3.01	580.74
4.02	383.20	4.01	453.45	3.99	618.29
5.01	390.66	5.01	459.53	5.00	624.89
5.99	397.10	5.89	464.23	6.02	630.21

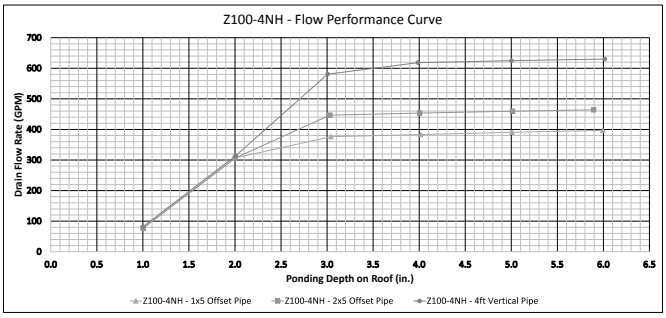

PREFIXES	DESCRIPTION	PIPE SIZE	LIST PRICE
Z100*	D.C.C.I. Body with Polydome	2″, 3″, 4″	448.00
		6″	635.00
		8″	635.00
ZC100	D.C.C.I. Body with Cast Iron Dome	2″, 3″, 4″	542.00
		6″	729.00
		8″	729.00

OUTLETS (SPECIFY PIPE SIZE IN INCHES AND TYPE OF OUTLET)				
OUTLET TYPE		OUTLET DESIGNATION (PIPE SIZE/OUTLET TYPE)	E BODY HT. DIM.	ADD
IC	Inside Caulk	3IC, 4IC	5-13/16″	98.00
IC	Inside Caulk	6IC	6-1/16″	98.00
IP	Threaded	2IP, 3IP, 4IP	5-15/16″, 6-3/16″, 6-5/16″	98.00
IP	Threaded	6IP, 8IP	6-11/16″, 6-3/4″	98.00
NH	No-Hub	2NH, 3NH, 4NH	6-15/16″	N/C
NH	No-Hub	6NH, 8NH	7-7/16″	N/C
NL	Neo-Loc (not recommended for roof drains)	2NL, 3NL, 4NL	7-3/8″	47.00
		6NL	8-1/32″	47.00

SUFFIXES			ADD
–AR	Acid Resistant Epoxy Coated Finish		490.00
–C	Underdeck Clamp		173.00
◷ –DP	Top-Set® Roof Deck Plate (Replaces both -C and -R)		225.00
◷ –DR	Top-Set Adjustable Drain Riser Extension Assembly	D.C.C.I.	1,051.00
		Galv.	1,319.00
–E	Static Extension 1″ thru 4″ (Specify Height)	D.C.C.I.	292.00
		Galv.	435.00
	For E Extensions Greater than 4″ - Per Inch (Specify Height)	D.C.C.I.	151.00
		Galv.	208.00
–EA	Adjustable Extension Assembly 2-1/8″ thru 3-1/2″	D.C.C.I.	522.00
		Galv.	693.00
–G	Galvanized Cast Iron	Z100	300.00
		ZC100	596.00
–R	Roof Sump Receiver		173.00
–SC	Secondary Clamp Collar		151.00
◷ –TC	Neo-Loc Test Cap Gasket (2″, 3″, 4″ NL Bottom Outlet Only)		POA
–VP	Vandal-Proof Secured Top		121.00
–84	Stainless Steel Perforated Gravel Guard 1″ thru 4″		483.00
	For Each Additional 1″ above 4″ - Per Inch (Specify Height)		77.00
–85	Stainless Steel Perforated Extension 1″ thru 4″		613.00
	For Each Additional 1″ above 4″ - Per Inch (Specify Height)		77.00
–89	2″ High Overflow Dam		141.00
–89-3	3″ High Overflow Dam		POA
–89-4	4″ High Overflow Dam		POA

A Outlet Size inches [mm]	B Body Diameter In [mm]	C Dome Diameter In [mm]	D Height, Roof to Dome Top In [mm]	Approximate Weight lb [kg]	Dome Open Area sq in [cm²]
2 [51], 3 [76], 4 [102]	16-9/16 [412]	12-5/16 [313]	4 [102]	31 [14]	121 [780]
6 [152], 8 [203]	20-3/32 [510]	15-7/8 [403]	6 [152]	43 [19]	214 [1380]

Shown with -85 Option

ZURN Z100-4NH-85 FLOFORCE High Performance Roof Drain, as specified above, with stainless steel perforated extension (-85).

Shown with -89 Option

ZURN Z100-4NH-89 FLOFORCE High Performance Roof Drain, as specified above, with 2″ high external water dam (-89).

**Regularly furnished unless otherwise specified.*

◷ *This symbol denotes a product that is engineered to reduce installation and rework time.*

For additional product information, please visit www.zurn.ca

Z100 15″ [381 MM] DIAMETER MAIN ROOF DRAIN WITH LOW SILHOUETTE DOME

ENGINEERING SPECIFICATION

Zurn Z100 15″ [381 mm] diameter roof drain features Dura-Coated cast iron body with combination membrane flashing clamp/gravel guard and low silhouette polydome.

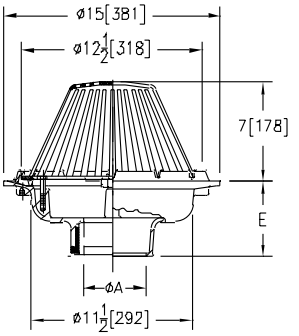

A Pipe Size inches [mm]	Dome Open Area sq in [cm²]	Approximate Weight lb [kg]
2 [51], 3 [76], 4 [102]	148 [955]	26 [12]
6 [152]		27 [12]
8 [203]		28 [13]

PREFIXES	DESCRIPTION	PIPE SIZE	LIST PRICE
Z100*	D.C.C.I. Body with Polydome	2″, 3″, 4″	448.00
		6″	635.00
		8″	635.00
ZA100	D.C.C.I. Body with Aluminum Dome	2″, 3″, 4″	542.00
		6″	729.00
		8″	729.00
ZC100	D.C.C.I. Body with Cast Iron Dome	2″, 3″, 4″	542.00
		6″	729.00
		8″	729.00
ZRB100	D.C.C.I. Body with Plain Bronze Dome	2″, 3″, 4″	1,368.00
		6″	1,599.00
		8″	1,599.00

OUTLETS (SPECIFY PIPE SIZE IN INCHES AND TYPE OF OUTLET)

OUTLET	TYPE	OUTLET DESIGNATION (PIPE SIZE/OUTLET TYPE)	E BODY HT. DIM.	ADD
IC	Inside Caulk	3IC, 4IC, 6IC	5-1/4″	98.00
IP	Threaded	2IP, 3IP, 4IP, 6IP, 8IP	3-3/4″	98.00
NH	No-Hub	2NH, 3NH, 4NH, 6NH, 8NH	5-1/4″	N/C
NL	Neo-Loc (not recommended for roof drains)	2NL, 3NL, 4NL	4-9/16″	47.00
		6NL	5-7/16″	47.00

SUFFIXES			ADD
–A	Waterpoof Flange		116.00
–AC	Angular Underdeck Clamp		347.00
–AR	Acid Resistant Epoxy Coated Finish		490.00
–AW	3/4″ to 4″ Adjustable Water Level Regulator (ZC Only)		544.00
	For Each Additional 1″ above 4″ (Specify Height)		187.00
–C	Underdeck Clamp		173.00
◷ –DE	Deck Extension (Includes Deck Plate -DP)	D.C.C.I.	675.00
		Galv.	953.00
◷ –DP	Top-Set® Roof Deck Plate (Replaces both -C and -R)		225.00
◷ –DR	Top-Set Adjustable Drain Riser Extension Assembly	D.C.C.I.	1,051.00
		Galv.	1,319.00
–E	Static Extension 1″ thru 4″ (Specify Height)	D.C.C.I.	292.00
		Galv.	435.00
	For E Extensions Greater than 4″ - Per Inch (Specify Height)	D.C.C.I.	151.00
		Galv.	208.00
–EA	Adjustable Extension Assembly 2-1/8″ thru 3-1/2″	D.C.C.I.	522.00
		Galv.	693.00
◷ –EB	Top-Set Adjustable Extension Assembly		406.00
–FG	Flush Grate (Replaces Dome Strainer)		577.00
–G	Galvanized Cast Iron	Z100	300.00
		ZC100	596.00
–HD	6-3/4″ High Aluminum Dome Strainer - 148 sq. in. open area (ZA Only)		POA
–R	Roof Sump Receiver		173.00
–SC	Secondary Clamp Collar		151.00
–SS	Stainless Steel Mesh Screen Over Dome		659.00
–ST	Dome with Solid Top (ZA and ZC Only)		116.00
◷ –TC	Neo-Loc Test Cap Gasket (2″, 3″, 4″ NL Bottom Outlet Only)		POA
–VP	Vandal-Proof Secured Top		121.00
–W2	2″ Internal Water Dam		426.00
–W3	3″ Internal Water Dam		426.00
–W4	4″ Internal Water Dam		426.00
–84	Stainless Steel Perforated Gravel Guard 1″ thru 4″		483.00
	For Each Additional 1″ above 4″ - Per Inch (Specify Height)		77.00
–85	Stainless Steel Perforated Extension 1″ thru 4″		613.00
	For Each Additional 1″ above 4″ - Per Inch (Specify Height)		77.00
–89	2″ High External Water Dam		141.00
–90	90° Threaded Side Outlet Body (2″, 3″, 4″, 6″)		235.00

For additional product information, please visit www.zurn.ca

**Regularly furnished unless otherwise specified.*

◷ *This symbol denotes a product that is engineered to reduce installation and rework time.*

Z101 HIGH CAPACITY 20″ [508 MM] DIAMETER MAIN ROOF DRAIN WITH LOW SILHOUETTE DOME

ENGINEERING SPECIFICATION

Zurn Z101 20″ [508 mm] diameter roof drain features Dura-Coated cast iron body with combination membrane flashing clamp/gravel guard and low silhouette cast iron dome.

A Pipe Size inches [mm]	Dome Open Area sq in [cm²]	Approximate Weight lb [kg]
8 [203]	216 [1394]	77 [35]
10 [254]		78 [35]
12 [305]		79 [36]

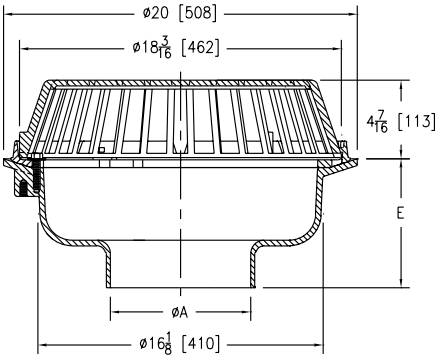

PREFIXES	DESCRIPTION	PIPE SIZE		LIST PRICE
Z101*	D.C.C.I. Body with Cast Iron Dome	8″		2,478.00
		10″		2,728.00
		12″		2,923.00
OUTLETS (SPECIFY PIPE SIZE IN INCHES AND TYPE OF OUTLET)				
OUTLET TYPE		**OUTLET DESIGNATION (PIPE SIZE/OUTLET TYPE)**	**E BODY HT. DIM.**	**ADD**
NH	No-Hub	8NH, 10NH, 12NH	7-5/16″	N/C
SUFFIXES				**ADD**
–AR	Acid Resistant Epoxy Coated Finish			2,571.00
–C	Under Deck Clamp			173.00
⏲ –DP	Top Set® Roof Deck Plate (Replaces both -C and -R)			1,014.00
–E	Static Extension 1″ thru 4″ (Specify Height)		D.C.C.I.	1,301.00
			Galv.	1,968.00
	For E Extensions Greater than 4″ - Per Inch (Specify Height)		D.C.C.I.	POA
			Galv.	POA
⏲ –EB	Top-Set Adjustable Extension Assembly			406.00
–G	Galvanized Cast Iron			1,814.00
–R	Roof Sump Receiver			173.00
–W2	2″ Internal Water Dam			1,406.00
–W3	3″ Internal Water Dam			1,406.00
–W4	4″ Internal Water Dam			1,406.00
–89	2″ High External Water Dam			895.00

**Regularly furnished unless otherwise specified.*

⏲ *This symbol denotes a product that is engineered to reduce installation and rework time.*

For additional product information, please visit www.zurn.ca

100C 15″ [381 MM] DIAMETER DEEP SUMP DUAL OUTLET ROOF DRAIN - LOW SILHOUETTE DOME

ENGINEERING SPECIFICATION

Bi-functional Froet Drain with 45° primary outlet connection. Powder coated cast iron deep sump body with combination membrane flashing clamp/gravel guard, overflow pipe (2″, 3″, 4″, 5″, 6″, 8″ [51 mm, 76 mm, 102 mm, 127 mm, 152 mm, 203 mm]) with standard 5-1/4″ [133 mm] high cast iron dome and 6-1/4″ [159 mm] high cast iron overflow.

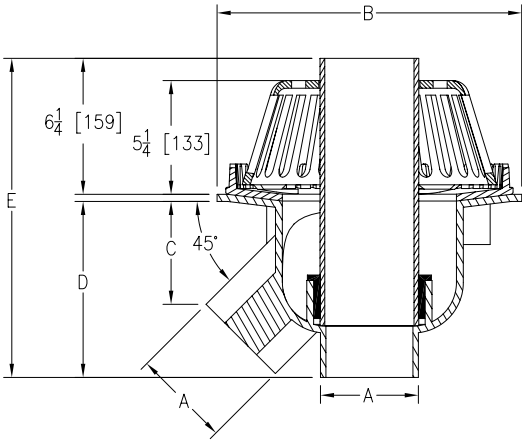

PREFIXES	DESCRIPTION	PIPE SIZE	LIST PRICE
100C*	Froet 100C Bi- Functional Deep Sump Dual Outlet Roof Drain	2″	POA
		3″	POA
		4″	POA
		5″	POA
		6″	POA
		8″	POA
SUFFIXES			**ADD**
-C	Underdeck Clamp		POA
-CFW	Control Flow Weir		POA
-DP	Deck Mounting Plate (2-1/4″ Elevation)		POA
-DU	Cast Iron Dome on Overflow Pipe	2″	POA
		3″	POA
		4″	POA
		5″	POA
		6″	POA
		8″	POA
-E	Static Extensions (2″, 4″, 6″)	2″	POA
		4″	POA
		6″	POA
-ER1.5	Elevation Ring (1.5″ of Insulation)		POA
-ER2	Elevation Ring (2″ of Insulation)		POA
-LP	Low Profile Dome		POA
-R	Roof Sump Receiver		POA
-ULP	Ultra Low Profile Dome		POA
-VEP	Vent Pipe		POA
-84	Stainless Steel Perforated Gravel Guard		POA

Dimensions in inches [mm]					Approximate Weight lb [kg]	Dome Open Area sq in [cm²]
A Pipe Size	B	C	D	E		
2[51]	10-1/4 [260]	2-13/16 [71]	5 [127]	11-5/8 [295]	21 [6]	48 [310]
3 [76]	14 [356]	4-7/8 [124]	6-7/8 [175]	13-1/2 [343]	47 [21]	90 [581]
4 [102]	14 [356]	4-7/8 [124]	8 [203]	14-5/8 [371]	53 [24]	90 [581]
5 [127]	18 [457]	5-1/2 [140]	10-1/4 [260]	16-7/8 [429]	83 [38]	127 [819]
6 [152]	18 [457]	5-1/2 [140]	11-1/4 [286]	17-7/8 [454]	89 [40]	127 [819]
8 [203]	25 [635]	8-1/4 [210]	13-3/4 [349]	20-3/8 [518]	122 [55]	203 [1310]

For additional product information, please visit www.zurn.ca

**Regularly furnished unless otherwise specified.*

This symbol denotes a product that is engineered to reduce installation and rework time.

Z104 15″ [381 MM] DIAMETER DEEP SUMP ROOF DRAIN WITH LOW SILHOUETTE DOME

ENGINEERING SPECIFICATION

Zurn Z104 15″ [381 mm] diameter roof drain features Dura-Coated cast iron deep sump body with combination membrane flashing clamp/ gravel guard and low silhouette polydome.

A Pipe Size inches [mm]	Dome Open Area sq in [cm²]	Approximate Weight lb [kg]
3 [76], 4 [102]	103 [665]	46 [21]
6 [152], 8 [203]		

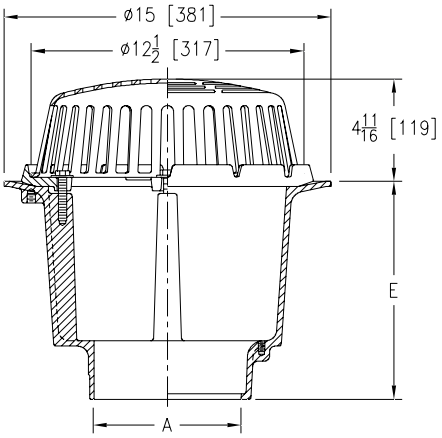

PREFIXES	DESCRIPTION	PIPE SIZE	LIST PRICE
Z104*	D.C.C.I. Body with Polydome	3″, 4″	1,659.00
		6″, 8″	2,352.00
ZA104	D.C.C.I. Body with Aluminum Dome	3″, 4″	1,842.00
		6″, 8″	2,539.00
ZC104	D.C.C.I. Body with Cast Iron Dome	3″, 4″	1,842.00
		6″, 8″	2,539.00

OUTLETS (SPECIFY PIPE SIZE IN INCHES AND TYPE OF OUTLET)

OUTLET	TYPE	OUTLET DESIGNATION (PIPE SIZE/OUTLET TYPE)	E BODY HT. DIM.	ADD
NH	No-Hub	3NH, 4NH, 6NH, 8NH	10″	N/C
NL	Neo-Loc (not recommended for roof drains)	3NL, 4NL	9-5/16″	N/C

SUFFIXES			ADD
–AC	Angular Underdeck Clamp		347.00
–AR	Acid Resistant Epoxy Coated Finish		490.00
–AW	Adjustable Water Level Regulator 3/4″ thru 4″ (ZC Only)		544.00
	For Each Additional 1″ above 4″ - Per Inch (Specify Height)		187.00
–C	Underdeck Clamp		173.00
–DX	Dex-O-Tex Flange		1,007.00
–E	Static Extension 1″ thru 4″ (Specify Height)	D.C.C.I.	292.00
		Galv.	435.00
	For E Extensions Greater than 4″ - Per Inch (Specify Height)	D.C.C.I.	151.00
		Galv.	208.00
–EA	Adjustable Extension Assembly 2-1/8″ thru 3-1/2″	D.C.C.I.	522.00
		Galv.	693.00
–FG	Flush Grate (Replaces Dome Strainer)		577.00
–G	Galvanized Cast Iron	Z	300.00
		ZC	596.00
–HD	6-3/4″ High Aluminum Dome Strainer, 148 sq. in. open area (ZA Only)		184.00
–R	Roof Sump Receiver		173.00
–SC	Secondary Clamping Collar		151.00
–SS	Stainless Steel Mesh Screen Over Dome		659.00
–VP	Vandal-Proof Secured Top		121.00
–W2	2″ Internal Water Dam		426.00
–W3	3″ Internal Water Dam		426.00
–W4	4″ Internal Water Dam		426.00
–84	Stainless Steel Perforated Gravel Guard 1″ thru 4″		483.00
	For Each Additional 1″ above 4″ - Per Inch (Specify Height)		77.00
–85	Stainless Steel Perforated Extension 1″ thru 4″		613.00
	For Each Additional 1″ above 4″ - Per Inch (Specify Height)		77.00
–89	2″ High External Water Dam		141.00

**Regularly furnished unless otherwise specified.*

This symbol denotes a product that is engineered to reduce installation and rework time.

For additional product information, please visit www.zurn.ca

Z105 CONTROL-FLO™ ROOF DRAIN WITH PARABOLIC WEIR

ENGINEERING SPECIFICATION

Zurn Z105 15″ [381 mm] diameter Control-Flo roof drain for dead-level roof construction features Dura-Coated cast iron body. Control-Flo weir shall be linear functioning with integral membrane flashing clamp/gravel guard and polydome. All data shall be verified proportional to flow rates. Each notch will allow 10 GPM flow per inch of rain water buildup above the drain.

A Pipe Size inches [mm]	Dome Open Area sq in [cm²]	Approximate Weight lb [kg]
2 [51], 3 [76], 4 [102]	148 [955]	34 [15]

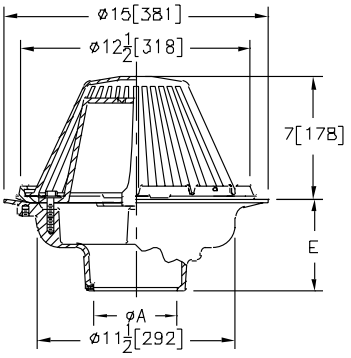

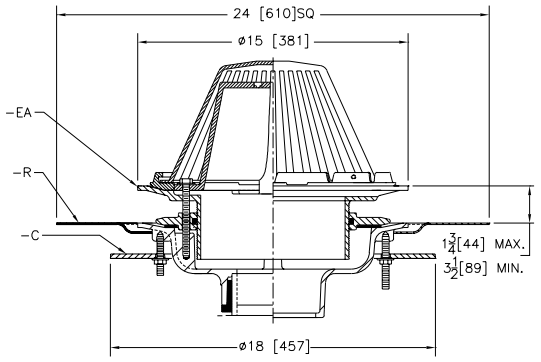

Shown with -C-EA-R Options

ZURN Z105-C-EA-R Control-Flo Roof Drain for dead-level roof construction. Drain is as specified above, with Dura-Coated steel roof sump receiver (-R), Dura-Coated cast iron underdeck clamp (-C), and Dura-Coated cast iron adjustable extension and clamp ring with neoprene O-Ring seal (-EA).

PREFIXES	DESCRIPTION	PIPE SIZE	LIST PRICE
Z105*	D.C.C.I. Body with Polydome	2″, 3″, 4″	664.00
ZA105	D.C.C.I. Body with Aluminum Dome	2″, 3″, 4″	935.00
ZC105	D.C.C.I. Body with Cast Iron Dome	2″, 3″, 4″	-

OUTLETS (SPECIFY PIPE SIZE IN INCHES AND TYPE OF OUTLET)				
OUTLET	TYPE	OUTLET DESIGNATION (PIPE SIZE/OUTLET TYPE)	E BODY HT. DIM.	ADD
IC	Inside Caulk	3IC, 4IC	5-1/4″	98.00
NH	No-Hub	2NH, 3NH, 4NH	5-1/4″	N/C
NL	Neo-Loc (not recommended for roof drains)	2NL, 3NL, 4NL	4-9/16″	47.00

SUFFIXES			ADD
–C	Underdeck Clamp		173.00
◷ –DP	Top-Set® Roof Deck Plate (Replaces both -C and -R)		225.00
–E	Static Extension 1″ thru 4″ (Specify Height)	D.C.C.I.	292.00
		Galv.	435.00
	For E Extensions Greater than 4″ - Per Inch (Specify Height)	D.C.C.I.	151.00
		Galv.	208.00
–EA	Adjustable Extension Assembly 2-1/8″ thru 3-1/2″	D.C.C.I.	522.00
		Galv.	693.00
–G	Galvanized Cast Iron		300.00
–R	Roof Sump Receiver		173.00
◷ –TC	Neo-Loc Test Cap Gasket (2″ thru 4″ NL Bottom Outlet Only)		116.00
–VP	Vandal-Proof Secured Top		121.00
–10	6″ High Parabolic Weir for Sloped Roof (ZC or ZA)		N/C

For additional product information, please visit www.zurn.ca

**Regularly furnished unless otherwise specified.*

◷ *This symbol denotes a product that is engineered to reduce installation and rework time.*

Z107 20″ [508 MM] WIDE DECK FLANGE ROOF DRAIN

ENGINEERING SPECIFICATION

Zurn Z107 20″ [508 mm] diameter wide deck flange roof drain features Dura-Coated cast iron body with combination membrane flashing clamp/gravel guard and low silhouette polydome.

A Pipe Size inches [mm]	Dome Open Area sq in [cm²]	Approximate Weight lb [kg]
3 [76], 4 [102]	103 [665]	39 [18]
6 [152], 8 [203]		

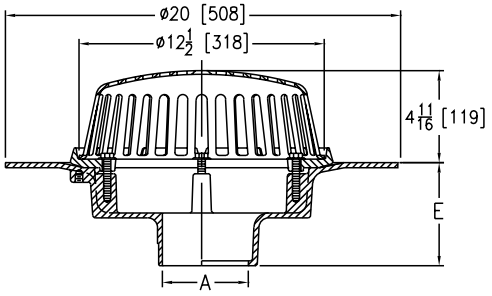

PREFIXES	DESCRIPTION	PIPE SIZE	LIST PRICE
Z107*	D.C.C.I. Body with Polydome	3″, 4″	1,451.00
		6″, 8″	1,609.00
ZA107	D.C.C.I. Body with Aluminum Dome	3″, 4″	1,545.00
		6″, 8″	1,732.00
ZC107	D.C.C.I. Body with Cast Iron Dome	3″, 4″	1,545.00
		6″, 8″	1,732.00

OUTLETS (SPECIFY PIPE SIZE IN INCHES AND TYPE OF OUTLET)				
OUTLET TYPE		OUTLET DESIGNATION (PIPE SIZE/OUTLET TYPE)	E BODY HT. DIM.	ADD
IC	Inside Caulk	3IC, 4IC, 6IC	5-1/4″	93.00
IP	Threaded	3IP, 4IP	5-1/4″	93.00
NH	No-Hub	3NH, 4NH, 6NH, 8NH	5-1/4″	N/C

SUFFIXES			ADD
–AC	Angular Underdeck Clamp		347.00
–AR	Acid Resistant Epoxy Coated Finish		490.00
–AW	Adjustable Water Level Regulator 3/4″ thru 4″ (ZC Only)		544.00
	For Each Additional 1″ above 4″ - Per Inch (Specify Height)		187.00
–C	Underdeck Clamp		173.00
–E	Static Extension 1″ thru 4″ (Specify Height)	D.C.C.I.	292.00
		Galv.	435.00
	For E Extensions Greater than 4″ - Per Inch (Specify Height)	D.C.C.I.	151.00
		Galv.	208.00
–EA	Adjustable Extension Assembly 2-1/8″ thru 3-1/2″	D.C.C.I.	497.00
		Galv.	660.00
–FG	Flush Grate (Replaces Dome Strainer)		577.00
–G	Galvanized Cast Iron		300.00
–SS	Stainless Steel Mesh Screen Over Dome		659.00
–VP	Vandal-Proof Secured Top		121.00
–W2	2″ Internal Water Dam		426.00
–W3	3″ Internal Water Dam		426.00
–W4	4″ Internal Water Dam		426.00
–84	Stainless Steel Perforated Gravel Guard 1″ thru 4″		483.00
	For Each Additional 1″ above 4″ - Per Inch (Specify Height)		77.00
–85	Stainless Steel Perforated Extension 1″ thru 4″		613.00
	For Each Additional 1″ above 4″ - Per Inch (Specify Height)		77.00
–89	2″ High External Water Dam		141.00

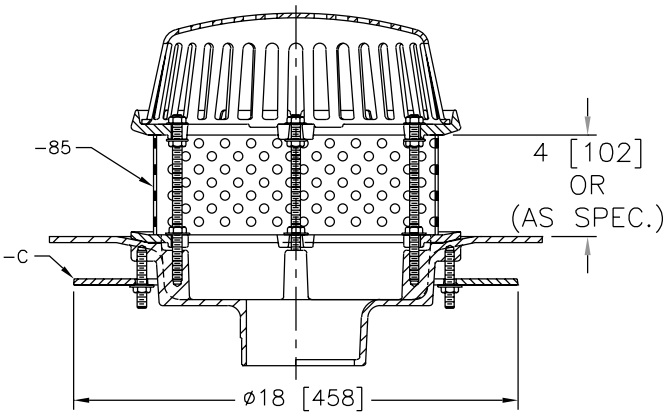

Shown with -C-85 Options

ZURN Z107-C-85 20″ diameter Wide Deck Flange Roof Drain, as specified above, with perforated extension with flat clamp collar (-85), and Dura-Coated cast iron underdeck clamp (-C).

**Regularly furnished unless otherwise specified.*

This symbol denotes a product that is engineered to reduce installation and rework time.

For additional product information, please visit www.zurn.ca

Z108 15″ [381 MM] DIAMETER DECK RECEPTOR DRAIN

ENGINEERING SPECIFICATION

Zurn Z108 15″ [381 mm] diameter roof drain features Dura-Coated cast iron body with combination membrane flashing clamp, deck receptor frame, and internal bottom dome strainer.

A Pipe Size inches [mm]	Dome Open Area sq in [cm²]	Approximate Weight lb [kg]
2 [51], 3 [76], 4 [102]	53 [342]	41 [19]
6 [152]		39 [18]
8 [203]		42 [19]

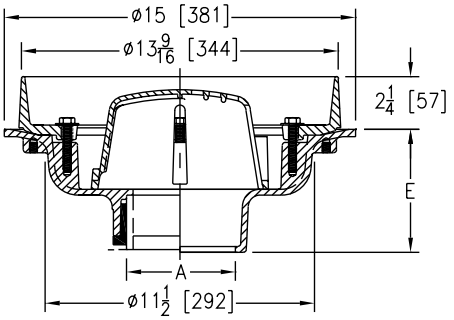

PREFIXES	DESCRIPTION	PIPE SIZE	LIST PRICE
Z108*	D.C.C.I. Body with Collar	2″, 3″, 4″	934.00
		6″	1,121.00
		8″	1,121.00

OUTLETS (SPECIFY PIPE SIZE IN INCHES AND TYPE OF OUTLET)

OUTLET TYPE		OUTLET DESIGNATION (PIPE SIZE/OUTLET TYPE)	E BODY HT. DIM.	ADD
IC	Inside Caulk	3IC, 4IC, 6IC	5-1/4″	98.00
IP	Threaded	2IP, 3IP, 4IP, 6IP, 8IP	3-3/4″	98.00
NH	No-Hub	2NH, 3NH, 4NH, 6NH, 8NH	5-1/4″	N/C
NL	Neo-Loc (not recommended for roof drains)	2NL, 3NL, 4NL	4-9/16″	47.00

SUFFIXES			ADD
–AR	Acid Resistant Epoxy Coated Finish		490.00
–C	Underdeck Clamp		173.00
◷ –DE	Deck Extension	D.C.C.I.	675.00
		Galv.	953.00
◷ –DP	Top-Set® Roof Deck Plate (Replaces Both -C and -R)		225.00
–E	Static Extension 1″ thru 4″ (Specify Height)	D.C.C.I.	292.00
		Galv.	435.00
	For E Extensions Greater than 4″ - Per Inch (Specify Height)	D.C.C.I.	151.00
		Galv.	208.00
–EA	Adjustable Extension Assembly 2-1/8″ thru 3-1/2″	D.C.C.I.	522.00
		Galv.	693.00
–FG	Flush Grate (Replaces Dome Strainer)		577.00
–G	Galvanized Cast Iron		300.00
–HD	6-3/4″ High Aluminum Dome Strainer (61 Sq. In. Open Area)		93.00
–R	Roof Sump Receiver		173.00
◷ –TC	Neo-Loc Test Cap Gasket (2″, 3″, 4″ NL Bottom Outlet Only)		116.00

For additional product information, please visit www.zurn.ca

**Regularly furnished unless otherwise specified.*

◷ *This symbol denotes a product that is engineered to reduce installation and rework time.*

Z110 15″ [381 MM] GREEN ROOF DRAIN WITH PERFORATED SCREEN ASSEMBLY, AND REMOVABLE COVER WITH LIFT HANDLE

ENGINEERING SPECIFICATION

Zurn Z110 15″ [381 mm] green roof drain features Dura-Coated cast iron body with combination membrane flashing clamp/gravel guard and low silhouette polydome. Complete with secured Type 304 (CF8) stainless steel, perforated screen assembly with secured, removable access cover with lift handle.

A Pipe Size inches [mm]	Dome Open Area sq in [cm²]	Approximate Weight lb [kg]
2 [51], 3 [76], 4 [102]	103 [665]	30 [14]
6 [152]		32 [15]
8 [203]		33 [15]

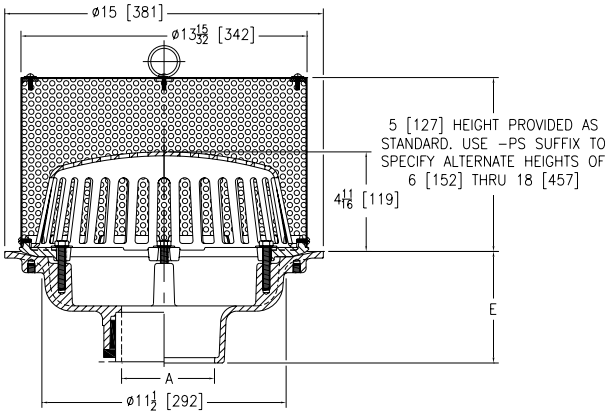

PREFIXES	DESCRIPTION	PIPE SIZE	LIST PRICE
Z110*	D.C.C.I. Body with Polydome	2″, 3″, 4″, 6″, 8″	4,389.00
ZA110	D.C.C.I. Body with Aluminum Dome	2″, 3″, 4″, 6″, 8″	4,538.00
ZC110	D.C.C.I. Body with Cast Iron Dome	2″, 3″, 4″, 6″, 8″	4,620.00

OUTLETS (SPECIFY PIPE SIZE IN INCHES AND TYPE OF OUTLET)

OUTLET TYPE		OUTLET DESIGNATION (PIPE SIZE/OUTLET TYPE)	E BODY HT. DIM.	ADD
IC	Inside Caulk	3IC, 4IC, 6IC	5-1/4″	98.00
IP	Threaded	3IP, 4IP, 6IP, 8IP	3-3/4″	98.00
NH	No-Hub	2NH, 3NH, 4NH, 6NH, 8NH	5-1/4″	N/C
NL	Neo-Loc (not recommended for roof drains)	2NL, 3NL, 4NL	4-9/16″	47.00
		6NL	5-7/16″	47.00

SUFFIXES			ADD
–AC	Angular Underdeck Clamp		347.00
–AR	Acid Resistant Epoxy Coated Finish		490.00
–C	Underdeck Clamp		173.00
◷ –DE	Deck Extension (Includes Deck Plate -DP)	D.C.C.I.	675.00
		Galv.	953.00
◷ –DP	Top-Set® Roof Deck Plate (Replaces Both the -C and -R)		225.00
–E	Static Extension 1″ thru 4″ (Specify Height)	D.C.C.I.	292.00
		Galv.	435.00
	For E Extensions Greater than 4″ - Per Inch (Specify Height)	D.C.C.I.	151.00
		Galv.	208.00
–EA	Adjustable Extension Assembly 2-1/8″ thru 3-1/2″	D.C.C.I.	522.00
		Galv.	693.00
◷ –EB	Top-Set Adjustable Extension Assembly		406.00
–G	Galvanized Cast Iron	Z110	300.00
		ZC110	596.00
–PS	Perforated Screen 6″ thru 18″ (Specify Height)		POA
–R	Roof Sump Receiver		173.00
–ST	Dome with Solid Top (ZA and ZC Only)		528.00
◷ –TC	Neo-Loc Test Cap Gasket (2″, 3″, 4″ NL Bottom Outlet Only)		116.00
–VP	Vandal-Proof Secured Screen Cover		121.00
–W2	2″ Internal Water Dam		426.00
–W3	3″ Internal Water Dam		426.00
–W4	4″ Internal Water Dam		426.00
–85	Stainless Steel Perforated Extension 1″ thru 4″		613.00
	For Each Additional 1″ above 4″ - Per Inch (Specify Height)		77.00

**Regularly furnished unless otherwise specified.*

◷ This symbol denotes a product that is engineered to reduce installation and rework time.

For additional product information, please visit www.zurn.ca

Z110-AI GREEN ROOF DRAIN WITH PERFORATED SCREEN ASSEMBLY, REMOVABLE COVER WITH LIFT HANDLE, AND AUXILIARY INLET

ENGINEERING SPECIFICATION

Zurn Z110-AI green roof drain features Dura-Coated cast iron body with combination membrane flashing and clamp/gravel guard. Complete with secured Type 304 (CF8) stainless steel, perforated screen assembly with secured, removable access cover with lift handle and auxiliary no-hub inlet connection.

NOTES

Auxiliary inlet sizes are only available as configured below. Auxiliary inlet size 'B' cannot exceed pipe size 'A'.

Dimensions in inches [mm]			Approximate Weight lb [kg]
A	B	C	
2 [51]	2 [51]	2-11/32 [60]	32 [15]
3 [76]	2 [51]	2-11/32 [60]	33 [15]
	3 [76]	2-27/32 [72]	
4 [102], 6 [152], 8 [203]	2 [51]	2-11/32 [60]	34 [15]
	3 [76]	2-27/32 [72]	
	4 [102]	3-3/8 [86]	

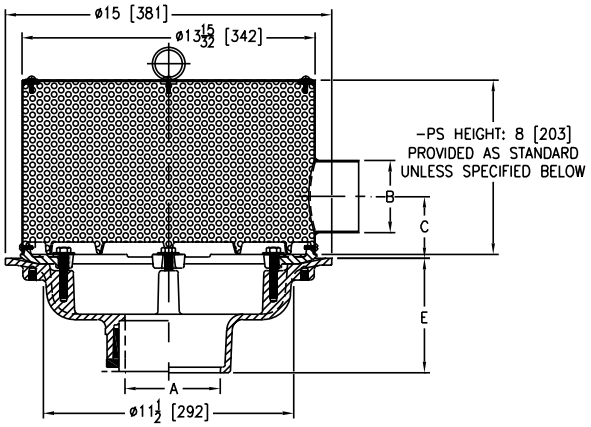

PREFIXES	DESCRIPTION	A PIPE SIZE	B AUX. INLET	LIST PRICE
Z110	D.C.C.I. with Type 304 Perforated Stainless Steel Screen Assembly	2″	2″	Combine with Product Designation for Pricing
		3″	2″, 3″	
		4″, 6″, 8″	2″, 3″, 4″	

PRODUCT DESIGNATION		B AUX. INLET	C DIM.	LIST PRICE
–2AI	2″ Auxiliary Inlet	2″	2-11/32″	POA
–3AI	3″ Auxiliary Inlet	3″	2-27/32″	POA
–4AI	4″ Auxiliary Inlet	4″	3-3/8″	POA

OUTLETS (SPECIFY PIPE SIZE IN INCHES AND TYPE OF OUTLET)				
OUTLET	TYPE	OUTLET DESIGNATION (PIPE SIZE/OUTLET TYPE)	E BODY HT. DIM.	ADD
IC	Inside Caulk	3IC, 4IC, 6IC	5-1/4″	98.00
IP	Threaded	2IP, 3IP, 4IP, 6IP, 8IP	3-3/4″	98.00
NH	No-Hub	2NH, 3NH, 4NH, 6NH, 8NH	5-1/4″	N/C
NL	Neo-Loc (not recommended for roof drains)	2NL, 3NL, 4NL	4-9/16″	47.00
		6NL	5-7/16″	47.00

SUFFIXES			ADD
–AC	Angular Underdeck Clamp		347.00
–AR	Acid Resistant Epoxy Coated Finish		490.00
–C	Underdeck Clamp		173.00
◷ –DE	Deck Extension (Includes Deck Plate -DP)	D.C.C.I.	675.00
		Galv.	953.00
◷ –DP	Top-Set® Roof Deck Plate (Replaces both the -C and -R)		225.00
◷ –DR	Top-Set Drain Riser	D.C.C.I.	1,051.00
		Galv.	1,319.00
–E	Static Extension 1″ thru 4″ (Specify Height)	D.C.C.I.	292.00
		Galv.	435.00
	For E Extensions Greater than 4″ - Per Inch (Specify Height)	D.C.C.I.	151.00
		Galv.	208.00
–EA	Adjustable Extension Assembly 2-1/8″ thru 3-1/2″	D.C.C.I.	522.00
		Galv.	693.00
◷ –EB	Top-Set Adjustable Extension Assembly		406.00
–G	Galvanized Cast Iron		300.00
–PS	Perforated Screen 9″ thru 18″ (Specify Height)		POA
–R	Roof Sump Receiver		173.00
◷ –TC	Neo-Loc Test Cap Gasket (2″, 3″, 4″ NL Bottom Outlet Only)		116.00
–VP	Vandal-Proof Secured Screen Cover		121.00

For additional product information, please visit www.zurn.ca

**Regularly furnished unless otherwise specified.*

◷ *This symbol denotes a product that is engineered to reduce installation and rework time.*

ZF110-R 15″ [381 MM] GREEN ROOF BOX - PERFORATED SCREEN ASSEMBLY

ENGINEERING SPECIFICATION

Zurn green roof drain box. HDPE Adjustable deep sump box for green roof applications. Box can be field cut for additional installation heights.

NOTE

The HDPE Adjustable Green Roof Box will accommodate all Zurn 100C Froet Drains except for the 100C8.

PREFIXES	DESCRIPTION	SIZE	A' BODY HT. DIM.	LIST PRICE
ZF110-R	HDPE Adjustable Round Green Roof Box*	R4	48″	POA
SUFFIXES				ADD
-DW	Double Wall Corrugated			POA
-LP1	HDPE Perforated Lid			POA
-LS1	HDPE Solid Lid			POA
-LS2	2000 lb Load Composite Lid Solid			POA

**Finished height to be cut in field*

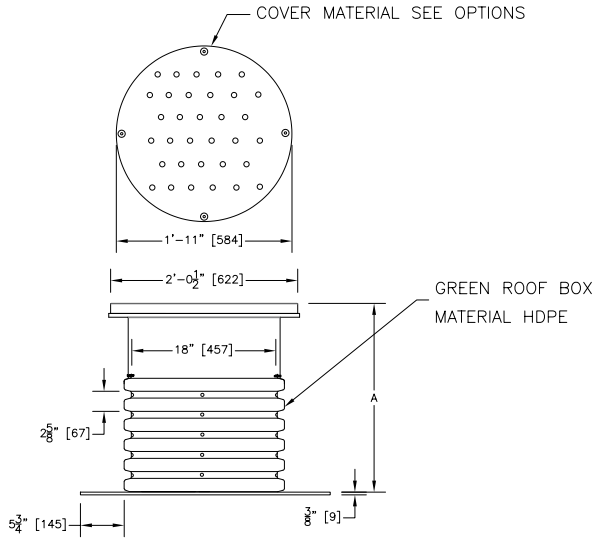

Product Size	Product Description	A inches [mm]	Product Weight lb [kg]
ZF110-R4	Adjustable Round HDPE	48 [1219]	49 [22]

**Regularly furnished unless otherwise specified.*

This symbol denotes a product that is engineered to reduce installation and rework time.

This symbol denotes a product that is engineered to reduce installation and rework time.

ZF110-S GREEN ROOF BOX - PERFORATED SCREEN ASSEMBLY, REMOVABLE COVER

ENGINEERING SPECIFICATION

Zurn green roof drain box comes standard with solid stainless steel top and stainless steel non-adjustable square sump box with vertical perforated sides to allow for proper drainage in green roof applications.

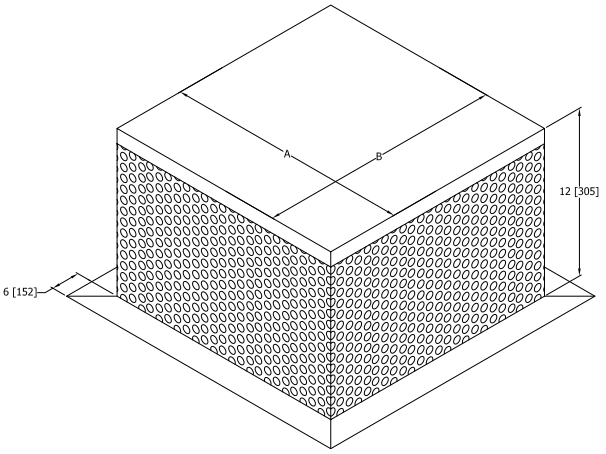

PREFIXES	DESCRIPTION	SIZE	A' DIM. SQ.	LIST PRICE
ZF110-S	Fabricated Type 304 Stainless Steel Green Roof Box*	3/4	16″	POA
		5/6	20″	POA
		8	28″	POA
SUFFIXES				**ADD**
-GTA	Light Duty Heel-Proof Grate Aluminum	3/4		POA
		5/6		POA
		8		POA
-GTS	Light Duty Heel-Proof Grate Stainless			POA
-H2	Double Height 24″ [610mm]			POA
-H3	Triple Height 36″ [914mm]			POA

Part Number	A inches [mm]	B inches [mm]	Product Weight lb [kg]
ZF110-S 3/4	16 [406]	16 [406]	18 [8]
ZF110-S 5/6	20 [508]	20 [508]	27 [12]
ZF110-S 8	28 [711]	28 [711]	39 [18]

Z111 12″ [305 MM] DIAMETER FLAT DECK ROOF DRAIN FOR METAL DECKS

ENGINEERING SPECIFICATION

Zurn Z111 12″ [305 mm] diameter flat deck roof drain for metal decks features Dura-Coated cast iron body with combination membrane flashing clamp/gravel guard and low silhouette cast iron dome.

A Pipe Size inches [mm]	Dome Open Area sq in [cm²]	Approximate Weight lb [kg]
3 [76], 4 [102]	78 [503]	22 [10]
6 [152]		24 [11]

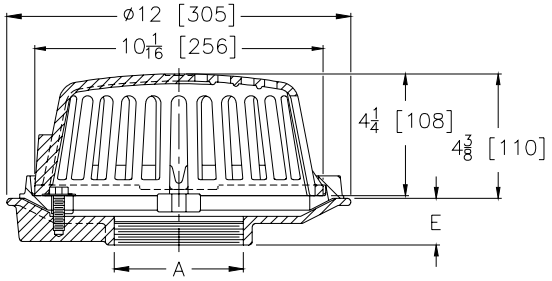

PREFIXES	DESCRIPTION	PIPE SIZE		LIST PRICE
Z111*	D.C.C.I. Body with 4-1/4″ Dome	3″, 4″		655.00
		6″		1,135.00
OUTLETS (SPECIFY PIPE SIZE IN INCHES AND TYPE OF OUTLET)				
OUTLET TYPE		**OUTLET DESIGNATION (PIPE SIZE/OUTLET TYPE)**	**E BODY HT. DIM.**	**ADD**
IP	Threaded	3IP, 4IP	1-5/8″	N/C
		6IP	1-7/8″	N/C
SUFFIXES				**ADD**
–C	Underdeck Clamp			173.00
–FG	Flush Grate (Z only)			577.00
–G	Galvanized Cast Iron			300.00
–R	Roof Sump Receiver			173.00
–SS	Stainless Mesh Screen Over Dome			659.00
–VP	Vandal-Proof Secured Top			121.00

For additional product information, please visit www.zurn.ca

**Regularly furnished unless otherwise specified.*

This symbol denotes a product that is engineered to reduce installation and rework time.

Z121 12″ [305 MM] DIAMETER ROOF DRAIN LOW SILHOUETTE DOME

ENGINEERING SPECIFICATION

Zurn Z121 12″ [305 mm] diameter roof drain features Dura-Coated Cast Iron body with combination membrane flashing clamp/gravel guard and low silhouette polydome.

A Pipe Size inches [mm]	Dome Open Area sq in [cm²]	Approximate Weight lb [kg]
2 [51], 3 [76], 4 [102], 6 [152]	78 [503]	22 [10]

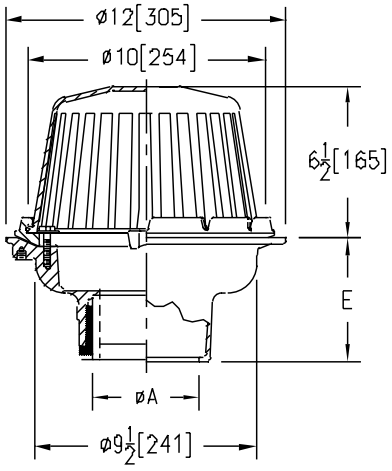

PREFIXES	DESCRIPTION	PIPE SIZE	LIST PRICE
Z121*	D.C.C.I. Body with 4-1/4″ Polydome	2″, 3″, 4″, 6″	378.00
ZA121	D.C.C.I. Body with 6-9/16″ Aluminum Dome	2″, 3″, 4″, 6″	477.00
ZC121	D.C.C.I. Body with Low-Silhouette Cast Iron Dome	2″, 3″, 4″, 6″	477.00

OUTLETS (SPECIFY PIPE SIZE IN INCHES AND TYPE OF OUTLET)

OUTLET	TYPE	OUTLET DESIGNATION (PIPE SIZE/OUTLET TYPE)	E BODY HT. DIM.	ADD
IC	Inside Caulk	2IC, 3IC, 4IC, 6IC	5-1/4″	98.00
IP	Threaded	2IP, 3IP, 4IP, 6IP	3-3/4″	98.00
NH	No-Hub	2NH, 3NH, 4NH, 6NH	5-1/4″	N/C
NL	Neo-Loc (not recommended for roof drains)	2NL, 3NL, 4NL	4-5/8″	47.00

SUFFIXES			ADD
–AR	Acid Resistant Epoxy Coated Finish		471.00
–C	Underdeck Clamp		149.00
–DB	Deep Sump Body (IC Only)		173.00
◷ –DP	Top-Set® Roof Deck Plate (Replaces both -C and -R)		299.00
–E	Static Extension 1″ thru 4″	D.C.C.I.	292.00
		Galv.	435.00
	For Each Additional 1″ above 4″ - Per Inch (Specify Height)	D.C.C.I.	151.00
		Galv.	208.00
◷ –EB	Top-Set Adjustable Extension Assembly		406.00
–FG	Flush Grate		577.00
–G	Galvanized Cast Iron		273.00
–R	Roof Sump Receiver		173.00
–SC	Secondary Clamping Collar		151.00
–SS	Stainless Steel Mesh Screen Over Dome		659.00
◷ –TC	Neo-Loc Test Cap Gasket (2″, 3″, 4″ NL Bottom Outlet Only)		116.00
–VP	Vandal-Proof Secured Top		121.00
–XJ	Vertical Expansion Joint (See Z190) (Use with IP Outlets Only)		–
–84	Stainless Steel Perforated Gravel Guard 1″ thru 4″		450.00
	For Each Additional 1″ above 4″ - Per Inch (Specify Height)		77.00
–85	Stainless Steel Perforated Extension 1″ thru 4″		566.00
	For Each Additional 1″ above 4″ - Per Inch (Specify Height)		77.00
–89	2″ High External Water Dam		129.00
–90	90° Threaded Side Outlet Body - 2″, 3″, 4″		222.00

**Regularly furnished unless otherwise specified.*

◷ *This symbol denotes a product that is engineered to reduce installation and rework time.*

For additional product information, please visit www.zurn.ca

ZCF121 12″ [305 MM] DIAMETER ROOF DRAIN

ENGINEERING SPECIFICATION

Zurn ZCF121 12″ [305 mm] diameter Control-Flo roof drain for dead-level roof construction, Dura-Coated cast iron body. Control-Flo weir shall be linear functioning with integral membrane flashing clamp/gravel guard and Poly-Dome. All data shall be verified proportional to flow rates."

A Pipe Size inches [mm]	Dome Open Area sq in [cm²]	Approximate Weight lb [kg]
2 [51], 3 [76], 4 [102], 6 [152]	78 [503]	22 [10]

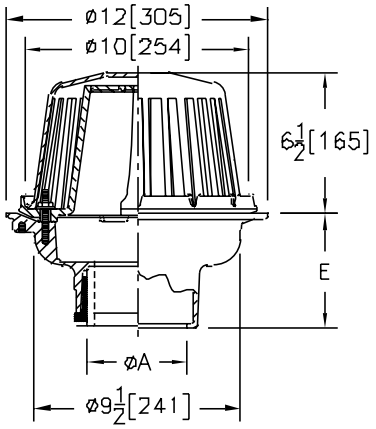

PREFIXES	DESCRIPTION	PIPE SIZE	LIST PRICE
ZCF121*	D.C.C.I. Body with 4-1/4″ [108 mm] Polydome	2″, 3″, 4″, 6″	610.00
ZACF121	D.C.C.I. Body with 6-9/16″ [167 mm] Aluminum Dome	2″, 3″, 4″, 6″	702.00

OUTLETS (SPECIFY PIPE SIZE IN INCHES AND TYPE OF OUTLET)

OUTLET TYPE		OUTLET DESIGNATION (PIPE SIZE/OUTLET TYPE)	E BODY HT. DIM.	ADD
IC	Inside Caulk	2IC, 3IC, 4IC, 6IC	5-1/4″ [133 mm]	98.00
IP	Threaded	2IP, 3IP, 4IP, 6IP	3-3/4″ [95 mm]	98.00
NH	No-Hub	2NH, 3NH, 4NH, 6NH	5-1/4″ [133 mm]	N/C
NL	Neo-Loc (not recommended for roof drains)	2NL, 3NL, 4NL	4-5/8″ [117 mm]	47.00

SUFFIXES			ADD
–A	Waterproof Flange		116.00
–AR	Acid Resistant Epoxy Coated Finish		471.00
–C	Underdeck Clamp		173.00
◷ –DP	Top-Set® Roof Deck Plate (Replaces both -C and -R)		225.00
–DR	Top-Set® Drain Riser	D.C.C.I.	1,051.00
		Galv.	1,319.00
–E	2″ [51 mm] High Static Extension	D.C.C.I.	292.00
		Galv.	435.00
	For Each Additional 1″ [25 mm] above 2″ [51 mm] - Per Inch (Specify Height)	D.C.C.I.	151.00
		Galv.	208.00
◷ –EB	Top-Set Adjustable Extension Assembly		406.00
–G	Galvanized Cast Iron		300.00
–R	Roof Sump Receiver		173.00
–SC	Secondary Clamping Collar		151.00
◷ –TC	Neo-Loc Test Cap Gasket (2″, 3″, 4″ [51 mm-102 mm] NL Bottom Outlet Only)		116.00
–VP	Vandal-Proof Secured Top		121.00
–90	90° Threaded Side Outlet Body (2″ [51 mm] thru 4″ [102 mm])		222.00

For additional product information, please visit www.zurn.ca

**Regularly furnished unless otherwise specified.*

◷ This symbol denotes a product that is engineered to reduce installation and rework time.

Z122 12″ [305 MM] DIAMETER DECK RECEPTOR DRAIN

ENGINEERING SPECIFICATION

Zurn Z122 12″ [305 mm] diameter deck receptor drain features Dura-Coated cast iron body with combination membrane flashing clamp/deck receptor frame and internal dome strainer.

A Pipe Size inches [mm]	Approximate Weight lb [kg]
2 [51], 3 [76], 4 [102], 6 [152]	29 [13]

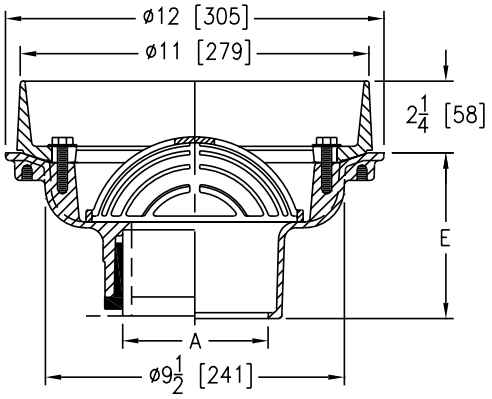

PREFIXES	DESCRIPTION	PIPE SIZE		LIST PRICE
Z122*	D.C.C.I. Body with Collar	2″, 3″, 4″, 6″		668.00
OUTLETS (SPECIFY PIPE SIZE IN INCHES AND TYPE OF OUTLET)				
OUTLET TYPE		**OUTLET DESIGNATION (PIPE SIZE/OUTLET TYPE)**	**E BODY HT. DIM.**	**ADD**
NH	No-Hub	2NH, 3NH, 4NH, 6NH	5-1/4″	N/C
NL	Neo-Loc (not recommended for roof drains)	2NL, 3NL, 4NL	4-5/8″	47.00
SUFFIXES				**ADD**
–AR	Acid Resistant Epoxy Coated Finish			471.00
–C	Underdeck Clamp			173.00
◷ –DP	Top-Set® Roof Deck Plate (Replaces both -C and -R)			225.00
–E	2″ High Static Extension		D.C.C.I.	292.00
			Galv.	435.00
	For Each Additional 1″ above 2″ - Per Inch (Specify Height)		D.C.C.I.	151.00
			Galv.	208.00
◷ –EB	Top-Set Adjustable Extension Assembly			406.00
–G	Galvanized Cast Iron			300.00
–HD	High Dome			93.00
–R	Roof Sump Receiver			173.00
◷ –TC	Neo-Loc Test Cap Gasket (2″ thru 4″ NL Bottom Outlet Only)			116.00

**Regularly furnished unless otherwise specified.*

◷ This symbol denotes a product that is engineered to reduce installation and rework time.

For additional product information, please visit www.zurn.ca

Z125 8-3/8" [203 MM] DIAMETER ROOF DRAIN LOW SILHOUETTE DOME

ENGINEERING SPECIFICATION

Zurn Z125 8-3/8" [203 mm] diameter roof drain features Dura-Coated cast iron body with combination flashing clamp/gravel guard and low silhouette polydome.

A Pipe Size inches [mm]	Dome Open Area sq in [cm²]	Approximate Weight lb [kg]
2 [51], 3 [76], 4 [102]	43 [277]	14 [6]

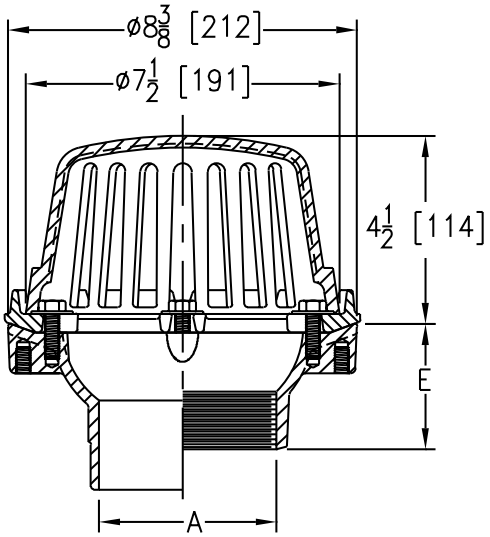

PREFIXES	DESCRIPTION	PIPE SIZE	LIST PRICE
Z125*	D.C.C.I. Body with 4-1/4" Poly Dome	2", 3", 4"	305.00
ZA125	D.C.C.I. Body with 4-1/4" Aluminum Dome	2", 3", 4"	505.00
ZC125	D.C.C.I. Body with Low Silhouette Cast Iron Dome	2", 3", 4"	505.00

OUTLETS (SPECIFY PIPE SIZE IN INCHES AND TYPE OF OUTLET)

OUTLET	TYPE	OUTLET DESIGNATION (PIPE SIZE/OUTLET TYPE)	E BODY HT. DIM.	ADD
IC	Inside Caulk	2IC, 3IC, 4IC	3-7/8"	N/C
IP	Threaded	2IP	2-7/16"	84.00
		3IP	2-3/4"	84.00
		4IP	3"	84.00
NH	No-Hub	2NH, 3NH, 4NH	4"	N/C
NL	Neo-Loc (not recommended for roof drains)	2NL, 3NL, 4NL	3-13/16"	N/C

SUFFIXES			ADD
–AR	Acid Resistant Epoxy Coated Finish		406.00
–C	Underdeck Clamp		173.00
◷ –DP	Top-Set® Roof Deck Plate (Replaces -C and -R)		299.00
–E	Static Extension 1" thru 4"	D.C.C.I.	292.00
		Galv.	435.00
	For Each Additional 1" above 4" - Per Inch (Specify Height)	D.C.C.I.	174.00
		Galv.	208.00
◷ –EB	Top-Set Adjustable Extension Assembly		406.00
–FG	Flush Grate (Replaces Dome Strainer)		577.00
–G	Galvanized Cast Iron		300.00
–R	Roof Sump Receiver		173.00
–SC	Secondary Clamping Collar		151.00
–SS	Stainless Steel Mesh Screen Over Dome		539.00
◷ –TC	Neo-Loc Test Cap Gasket (2", 3", 4" NL Bottom Outlet Only)		116.00
–VP	Vandal-Proof Secured Top		121.00
–XJ	Vertical Expansion Joint (See Z190) (Use with IP Outlets Only)		–
–84	Stainless Steel Perforated Gravel Guard 1" thru 4"		422.00
	For Each Additional 1" above 4" - Per Inch (Specify Height)		77.00
–85	Stainless Steel Perforated Extension 1" thru 4"		532.00
	For Each Additional 1" above 4" - Per Inch (Specify Height)		77.00
–89	2" High External Water Dam		118.00
–90	90° Threaded Side Outlet Body (2", 3", 4")		194.00

For additional product information, please visit www.zurn.ca

**Regularly furnished unless otherwise specified.*

◷ *This symbol denotes a product that is engineered to reduce installation and rework time.*

Z127 8-1/2" [216 MM] DIAMETER DECK RECEPTOR DRAIN

ENGINEERING SPECIFICATION

Zurn Z127 8-1/2" [216 mm] diameter deck receptor drain features Dura-Coated cast iron body with combination membrane flashing clamp/deck receptor frame and internal dome strainer.

A Pipe Size inches [mm]	Approximate Weight lb [kg]
2 [51], 3 [76], 4 [102]	19 [9]

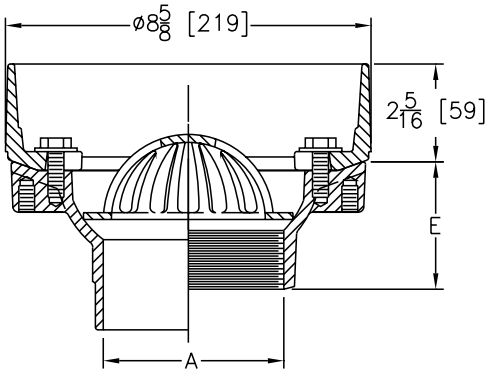

PREFIXES	DESCRIPTION	PIPE SIZE		LIST PRICE
Z127*	D.C.C.I. Body with Collar	2", 3", 4"		559.00
OUTLETS (SPECIFY PIPE SIZE IN INCHES AND TYPE OF OUTLET)				
OUTLET TYPE		**OUTLET DESIGNATION (PIPE SIZE/OUTLET TYPE)**	**E BODY HT. DIM.**	**ADD**
IC	Inside Caulk	2IC, 3IC, 4IC	3-7/8"	98.00
IP	Threaded	2IP	2-7/16"	98.00
		3IP	2-3/4"	98.00
		4IP	3"	98.00
NH	No-Hub	2NH, 3NH, 4NH	3-31/32"	N/C
NL	Neo-Loc (not recommended for roof drains)	2NL, 3NL, 4NL	3-27/32"	47.00
SUFFIXES				**ADD**
–AR	Acid Resistant Epoxy Coated Finish			471.00
–C	Underdeck Clamp			173.00
◷ –DP	Top-Set® Roof Deck Plate (Replaces -C and -R)			225.00
–E	2" High Static Extension		D.C.C.I.	292.00
			Galv.	435.00
	For Each Additional 1" above 2" - Per Inch (Specify Height)		D.C.C.I.	151.00
			Galv.	208.00
◷ –EB	Top-Set Adjustable Extension Assembly			406.00
–G	Galvanized Cast Iron			300.00
–HD	High Dome			93.00
–R	Roof Sump Receiver			173.00
◷ –TC	Neo-Loc Test Cap Gasket (2", 3", 4" NL Bottom Outlet Only)			116.00

**Regularly furnished unless otherwise specified.*

◷ *This symbol denotes a product that is engineered to reduce installation and rework time.*

For additional product information, please visit www.zurn.ca

Z130 8″ [203 MM] MAIN ROOF DRAIN

ENGINEERING SPECIFICATION

Zurn Z130 8″ [203 mm] diameter roofdrain. Dura-Coated cast iron body with combination membraneflashing clamp/gravel guard and Poly-Dome.

A Pipe Size inches [mm]	Dome Open Area sq in [cm²]	Approximate Weight lb [kg]
2 [51], 3 [76], 4 [102]	15 [97]	11 [5]

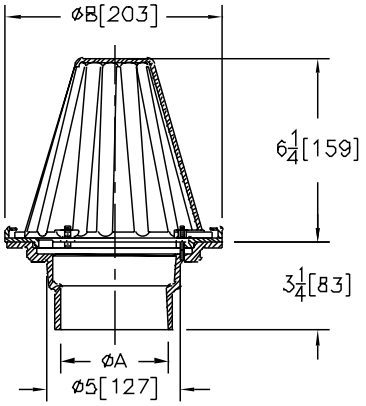

PREFIXES	DESCRIPTION	PIPE SIZE	LIST PRICE
Z130*	D.C.C.I. Body with polydome	2″, 3″, 4″	219.00
ZA130	D.C.C.I. Body with Aluminum Dome	2″, 3″, 4″	329.00
OUTLETS (SPECIFY PIPE SIZE IN INCHES AND TYPE OF OUTLET)			
OUTLET TYPE		**OUTLET DESIGNATION (PIPE SIZE/OUTLET TYPE)**	**ADD**
NH	No-Hub	2NH, 3NH, 4NH	N/C
SUFFIXES			**ADD**
–A	Waterproof Flange		61.00
–C	Underdeck Clamp		68.00
◷ –EB	Elevating Body Plate		101.00
–G	Galvanized Cast Iron		300.00
–R	Roof Sump Receiver		98.00
–SS	Stainless Mesh Screen Over Dome		314.00
–VP	Vandal-Proof Secured Top		121.00
–84	Stainless Steel Perforated Gravel Guard		197.00
–85	Stainless Steel Perforated Extension		273.00
	For Each Additional 1″ [25 mm] above 4″ [102 mm] - Per Inch (Specify Height)		46.00

ZCF130 8″ [203 MM] CONTROL ROOF DRAIN

ENGINEERING SPECIFICATION

Zurn ZCF130 8″ [203 mm] diameter Control-Flo roof drain for dead-level roof construction, Dura-Coated cast iron body. Control-Flo weir shall be linear functioning with combination membrane flashing clamp/gravel guard and Poly-Dome. All data shall be verified proportional to flow rates.

A Pipe Size inches [mm]	Grate Open Area sq in [cm²]	Approximate Weight lb [kg]
2 [51], 3 [76], 4 [102]	15 [97]	11 [5]

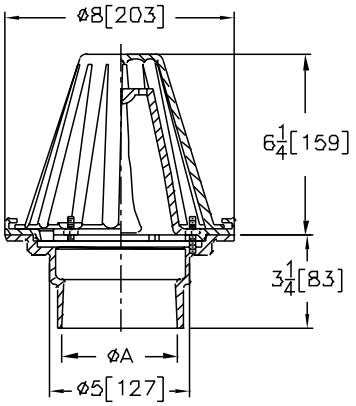

PREFIXES	DESCRIPTION	PIPE SIZE	LIST PRICE
ZCF130*	D.C.C.I. Body with polydome	2″, 3″, 4″	343.00
ZACF130	D.C.C.I. Body with Aluminum Dome	2″, 3″, 4″	453.00
OUTLETS (SPECIFY PIPE SIZE IN INCHES AND TYPE OF OUTLET)			
OUTLET TYPE		**OUTLET DESIGNATION (PIPE SIZE/OUTLET TYPE)**	**ADD**
NH	No-Hub	2NH, 3NH, 4NH	N/C
SUFFIXES			**ADD**
–A	Waterproof Flange		61.00
–C	Underdeck Clamp		68.00
◷ –EB	Elevating Body Plate		101.00
–G	Galvanized Cast Iron		300.00
–R	Roof Sump Receiver		98.00
–SS	Stainless Mesh Screen Over Dome		314.00
–VP	Vandal-Proof Secured Top		121.00
–84	Stainless Steel Perforated Gravel Guard		197.00

For additional product information, please visit www.zurn.ca

**Regularly furnished unless otherwise specified.*

◷ *This symbol denotes a product that is engineered to reduce installation and rework time.*

Z131 14-9/32" [363 MM] DIAMETER SIPHONIC OVERFLOW ROOF DRAIN

ENGINEERING SPECIFICATION

Zurn Z131 14-9/32" [363 mm] diameter siphonic overflow roof drain features Dura-Coated ductile iron drain body, 'B' high external combination membrane flashing clamp/ overflow gravel guard, and low silhouette polydome. Complete with vandal-proof secured, Dura-Coated cast iron, air-restricting baffle and grate, and Top-Set® deck plate.

A Pipe Size inches [mm]	Dome Open Area sq in [cm²]	Approximate Weight lb [kg]
2 [51], 3 [76], 4 [102]	28 [181]	48 [22]

PREFIXES	DESCRIPTION	PIPE SIZE		LIST PRICE
Z131*	Dura-Coated Ductile Iron Body with Polydome	2", 3", 4"		POA
OUTLETS (SPECIFY PIPE SIZE IN INCHES AND TYPE OF OUTLET)				
OUTLET TYPE		**OUTLET DESIGNATION (PIPE SIZE/OUTLET TYPE)**	**"B" DIMENSION**	**ADD**
NH	No-Hub	2NH	2-1/4"	N/C
		3NH, 4NH	3-5/16"	N/C
SUFFIXES				**ADD**
–DR	Top-Set® Drain Riser		D.C.C.I.	POA
			Galv.	POA
–EB	Top-Set Adjustable Extension Assembly			POA
–VP	Vandal-Proof Secured Top			POA

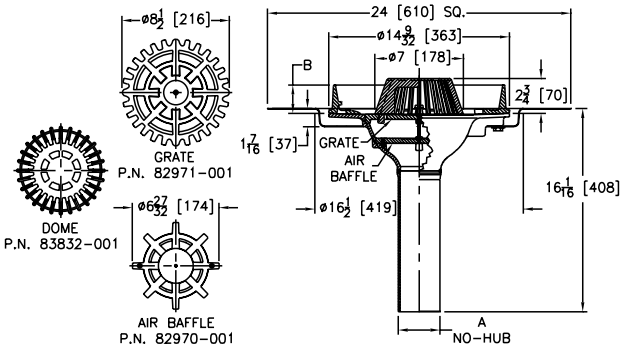

Z135-6 8" [203 MM] MAIN ROOF DRAIN FOR CONVENTIONAL INVERTED PROMENADE DECK ROOF

ENGINEERING SPECIFICATION

Zurn Z135-6 8" [203 mm] diameter drain for conventional inverted promenade deck roof. Dura-Coated cast iron body, adjustable head, round grate, cast iron strainer collar and flashing clamp collar. Stainless steel drainage extension and hardware

A Pipe Size inches [mm]	Grate Open Area sq in [cm²]	Approximate Weight lb [kg]
2 [51], 3 [76], 4 [102]	12 [77]	15 [7]

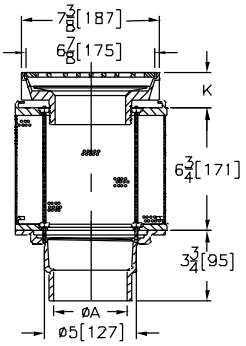

PREFIXES	DESCRIPTION	PIPE SIZE	LIST PRICE
Z135-6*	D.C.C.I. Body with Cast-Iron Strainer	2", 3", 4"	783.00
ZN135-6	D.C.C.I. Body with Polished Nickel Bronze Grate	2", 3", 4"	1,104.00
OUTLETS (SPECIFY PIPE SIZE IN INCHES AND TYPE OF OUTLET)			
OUTLET TYPE		**OUTLET DESIGNATION (PIPE SIZE/OUTLET TYPE)**	**ADD**
NH	No-Hub	2NH, 3NH, 4NH	N/C
SUFFIXES			**ADD**
–A	Waterproof Flange		61.00
–C	Underdeck Clamp		68.00
–G	Galvanized Cast Iron		300.00
–R	Roof Sump Receiver		98.00
–Y	Sediment Bucket		53.00

*Regularly furnished unless otherwise specified.

This symbol denotes a product that is engineered to reduce installation and rework time.

For additional product information, please visit www.zurn.ca

Z150 14″ [356 MM] SQUARE TOP PROM-DECK DRAIN WITH HEEL-PROOF GRATE AND ROTATABLE FRAME

PATENTED

ENGINEERING SPECIFICATION

Zurn Z150 14″ [356 mm] square top prom-deck drain features Dura-Coated cast iron body with rotatable, square promenade frame with seepage openings, frame clamps and heavy-duty, heel-proof grate and sediment bucket.

NOTES

†Add 3/16″ [5 mm] to 2″ [51 mm] dimension and 3/8″ [10 mm] to 14″ [356 mm] dimension

A Pipe Size inches [mm]	Grate Open Area sq in [cm²]	Approximate Weight lb [kg]
2 [51], 3 [76], 4 [102]	44 [284]	53 [24]
6 [152]		
8 [203]		54 [24]

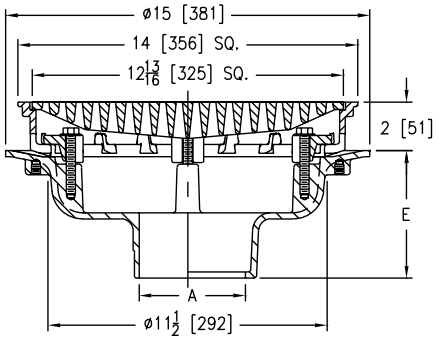

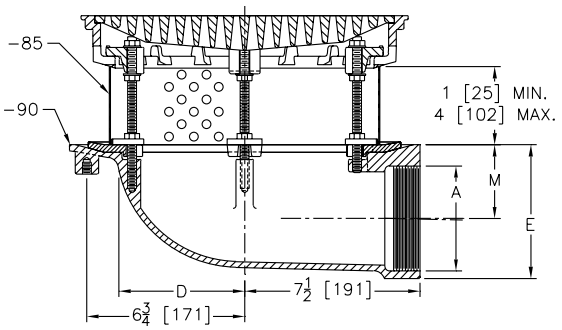

Shown with -85-90 Options

ZURN Z150-85-90 14″ Square Top Lateral Prom-Deck Drain. Dura-Coated cast iron body with side outlet, rotatable square promenade frame with seepage openings, frame clamps, perforated stainless steel extension with secondary clamp collar, and heavy-duty heel-proof grate.

PREFIXES	DESCRIPTION	PIPE SIZE	LIST PRICE
Z150*	D.C.C.I. Body with Top	2″, 3″, 4″	1,371.00
		6″	1,638.00
		8″	1,638.00
ZN150†	D.C.C.I. Body with Polished Nickel Bronze Top	2″, 3″, 4″	2,486.00
		6″	2,636.00
		8″	2,636.00

OUTLETS (SPECIFY PIPE SIZE IN INCHES AND TYPE OF OUTLET)

OUTLET TYPE		OUTLET DESIGNATION (PIPE SIZE/OUTLET TYPE)	E BODY HT. DIM.	ADD
IC	Inside Caulk	3IC, 4IC, 6IC	5-1/4″	98.00
IP	Threaded	2IP, 3IP, 4IP, 6IP, 8IP	3-3/4″	98.00
NH	No-Hub	2NH, 3NH, 4NH, 6NH, 8NH	5-1/4″	N/C
NL	Neo-Loc (not recommended for roof drains)	2NL, 3NL, 4NL	4-9/16″	47.00

SUFFIXES			ADD
–AR	Acid Resistant Epoxy Coated Finish		490.00
–C	Underdeck Clamp		173.00
◷ –DE	Deck Extension	D.C.C.I.	675.00
		Galv.	953.00
◷ –DP	Top-Set® Roof Deck Plate (Replaces -C and -R)		225.00
◷ –DR	Top-Set Drain Riser (Adjustment from 3-5/8″ thru 7-1/4″)	D.C.C.I.	1,051.00
		Galv.	1,319.00
–DT	Decorative Polished Top		423.00
–E	Static Extension 1″ thru 4″ (Specify Height)	D.C.C.I.	292.00
		Galv.	435.00
	For E Extensions Greater than 4″ - Per Inch (Specify Height)	D.C.C.I.	151.00
		Galv.	208.00
–EA	Adjustable Extension Assembly 2-1/8″ thru 3-1/2″	D.C.C.I.	522.00
		Galv.	693.00
◷ –EB	Top-Set Adjustable Extension Assembly		406.00
–G	Galvanized Cast Iron		300.00
–R	Roof Sump Receiver		173.00
–S	Secondary Strainer		116.00
–SC	Secondary Clamp Collar		151.00
◷ –TC	Neo-Loc Test Cap Gasket (2″, 3″, 4″ NL Bottom Outlet Only)		116.00
–TS	Top Secured with Slotted Screws		121.00
–VP	Vandal-Proof Secured Top		121.00
–XJ	Vertical Expansion Joint (See Z190) (Use with IP Outlets Only)		–
–85	Stainless Steel Perforated Extension 1″ thru 4″		613.00
	For Each Additional 1″ above 4″ - Per Inch (Specify Height)		77.00
–90	90° Threaded Side Outlet Body (2″, 3″, 4″, 6″)		235.00

For additional product information, please visit www.zurn.ca

**Regularly furnished unless otherwise specified.*

◷ This symbol denotes a product that is engineered to reduce installation and rework time.

Z154 12″ [305 MM] SQUARE TOP PROM-DECK DRAIN WITH HEEL-PROOF GRATE AND ROTATABLE FRAME

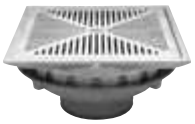

PATENTED

ENGINEERING SPECIFICATION

Zurn Z154 12″ [305 mm] square top prom-deck drain features Dura-Coated cast iron body with rotatable, light-duty, square promenade frame with seepage openings, frame clamps and light-duty, heel-proof grate.

NOTES

†Add 3/16″ [5 mm] to 2″ [51 mm] dimension and 5/8″ [16 mm] to 12″ [305 mm] dimension

A Pipe Size inches [mm]	Grate Open Area sq in [cm²]	Approximate Weight lb [kg]
2 [51], 3 [76], 4 [102], 6 [152]	34 [219]	29 [13]

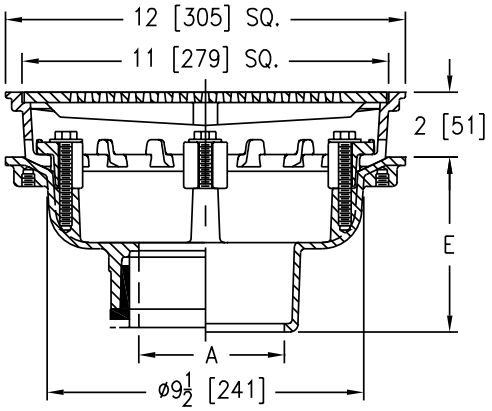

PREFIXES	DESCRIPTION	PIPE SIZE	LIST PRICE
Z154*	D.C.C.I. Body with Top	2″, 3″, 4″, 6″	968.00
ZB154†	D.C.C.I. Body with Polished Bronze Top	2″, 3″, 4″, 6″	1,514.00
ZN154†	D.C.C.I. Body with Polished Nickel Bronze Top	2″, 3″, 4″, 6″	1,733.00

OUTLETS (SPECIFY PIPE SIZE IN INCHES AND TYPE OF OUTLET)				
OUTLET TYPE		OUTLET DESIGNATION (PIPE SIZE/OUTLET TYPE)	E BODY HT. DIM.	ADD
IC	Inside Caulk	2IC, 3IC, 4IC, 6IC	5-1/4″	98.00
IP	Threaded	2IP, 3IP, 4IP, 6IP	3-3/4″	98.00
NH	No-Hub	2NH, 3NH, 4NH, 6NH	5-1/4″	N/C
NL	Neo-Loc (not recommended for roof drains)	2NL, 3NL, 4NL	4-9/16″	47.00

SUFFIXES			ADD
–AR	Acid Resistant Epoxy Coated Finish		490.00
–C	Underdeck Clamp		173.00
–DG	Duresist Grate - Extra Heavy Duty		516.00
◷ –DP	Top-Set® Roof Deck Plate		225.00
–DT	Decorative Polished Top		423.00
–E	2″ High Static Extension	D.C.C.I.	292.00
		Galv.	435.00
	For Each Additional 1″ above 2″ - Per Inch (Specify Height)	D.C.C.I.	151.00
		Galv.	208.00
◷ –EB	Top-Set Adjustable Extension Assembly		406.00
–G	Galvanized Cast Iron		300.00
–S	Secondary Strainer		116.00
–SC	Secondary Clamp Collar		151.00
◷ –TC	Neo-Loc Test Cap Gasket (2″, 3″, 4″ NL Bottom Outlet Only)		116.00
–TS	Top Secured with Slotted Screws		121.00
–VP	Vandal-Proof Secured Top		121.00
–Y	Sediment Bucket		219.00
–85	Stainless Steel Perforated Extension 1″ thru 4″		561.00
	For Each Additional 1″ above 4″ - Per Inch (Specify Height)		77.00
–90	90° Threaded Side Outlet Body (2″, 3″, 4″)		222.00

*Regularly furnished unless otherwise specified.

◷ *This symbol denotes a product that is engineered to reduce installation and rework time.*

For additional product information, please visit www.zurn.ca

Z158 10″ [254 MM] SQUARE TOP PROM-DECK DRAIN WITH HEEL-PROOF GRATE AND ROTATABLE FRAME

PATENTED

ENGINEERING SPECIFICATION

Zurn Z158 10″ [254 mm] square top prom-deck drain features Dura-Coated cast iron body with rotatable, square promenade frame with seepage openings, frame clamps and light-duty, heel-proof grate.

NOTES

†Add 3/16″ [5 mm] to 2-1/4″ [57 mm] dimension and 5/8″ [16 mm] to 10″ [254 mm] dimension

A Pipe Size inches [mm]	Grate Open Area sq in [cm²]	Approximate Weight lb [kg]
2 [51], 3 [76], 4 [102]	21 [136]	20 [9]

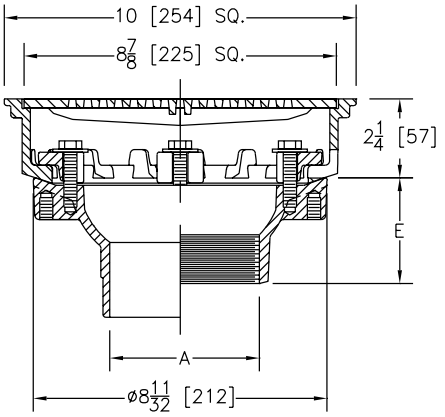

PREFIXES	DESCRIPTION	PIPE SIZE	LIST PRICE
Z158*	D.C.C.I. Body with Top	2″, 3″, 4″	746.00
ZB158†	D.C.C.I. Body with Polished Bronze Top	2″, 3″, 4″	1,122.00
ZN158†	D.C.C.I. Body with Polished Nickel Bronze Top	2″, 3″, 4″	1,346.00

OUTLETS (SPECIFY PIPE SIZE IN INCHES AND TYPE OF OUTLET)

OUTLET	TYPE	OUTLET DESIGNATION (PIPE SIZE/OUTLET TYPE)	E BODY HT. DIM.	ADD
IC	Inside Caulk	3IC, 4IC	3-7/8″	98.00
IP	Threaded	2IP	2-7/16″	98.00
		3IP	2-3/4″	98.00
		4IP	3″	98.00
NH	No-Hub	2NH, 3NH, 4NH	4″	N/C
NL	Neo-Loc (not recommended for roof drains)	2NL, 3NL, 4NL	3-13/16″	47.00

SUFFIXES			ADD
–AR	Acid Resistant Epoxy Coated Finish		475.00
–C	Underdeck Clamp		173.00
–DG	Duresist Grate - Extra Heavy Duty		516.00
◷ –DP	Top-Set® Roof Deck Plate		225.00
–DT	Decorative Polished Top		423.00
–E	2″ High Static Extension	D.C.C.I.	292.00
		Galv.	435.00
	For Each Additional 1″ above 2″ - Per Inch (Specify Height)	D.C.C.I.	151.00
		Galv.	208.00
◷ –EB	Top-Set Adjustable Extension Assembly		406.00
–G	Galvanized Cast Iron		300.00
–SC	Secondary Clamp Collar		151.00
◷ –TC	Neo-Loc Test Cap Gasket (2″, 3″, 4″ NL Bottom Outlet Only)		116.00
–TS	Top Secured with Slotted Screws		121.00
–VP	Vandal-Proof Secured Top		121.00
–Y	Sediment Bucket		219.00
–85	Stainless Steel Perforated Extension 1″ thru 4″		422.00
	For Each Additional 1″ above 4″ - Per Inch (Specify Height)		77.00
–90	90° Threaded Side Outlet Body (2″, 3″, 4″)		205.00

For additional product information, please visit www.zurn.ca

**Regularly furnished unless otherwise specified.*

◷ This symbol denotes a product that is engineered to reduce installation and rework time.

Z160 135° SCUPPER DRAIN

ENGINEERING SPECIFICATION

Zurn ZRB160 135° scupper drain features Dura-Coated cast iron body and plain bronze grate with integral membrane clamp.

Dimensions in inches [mm]			
A	B	Grate Open Area sq in [cm²]	Approximate Weight lb [kg]
4 [102]	2-9/16 [65]	114 [735]	52 [24]
6 [152]	3-5/8 [92]		

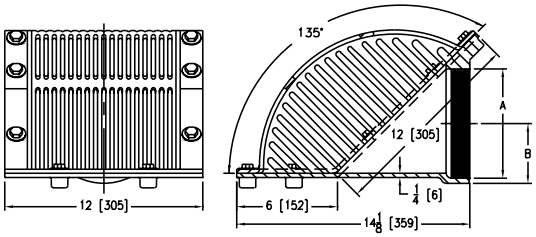

PREFIXES	DESCRIPTION	PIPE SIZE	LIST PRICE
ZRB160*	D.C.C.I. Body with Plain Bronze Grate	4″	3,381.00
		6″	3,756.00
ZB160	D.C.C.I. Body with Polished Bronze Grate	4″	3,677.00
		6″	4,086.00
ZN160	D.C.C.I. Body with Polished Nickel Bronze Grate	4″	4,279.00
		6″	4,692.00
OUTLETS (SPECIFY PIPE SIZE IN INCHES AND TYPE OF OUTLET)			
OUTLET TYPE		OUTLET DESIGNATION (PIPE SIZE/OUTLET TYPE)	ADD
IP	Threaded	4IP, 6IP	N/C
SUFFIXES			ADD
–G	Galvanized Cast Iron		398.00

Z161 3″ X 10″ [76 MM X 254 MM] OBLIQUE SCUPPER DRAIN

ENGINEERING SPECIFICATION

Zurn ZARB161 3″ x 10″ [76 mm x 254 mm] oblique scupper drain features plain bronze body with gasket and plain bronze grate with integral membrane clamp.

Dimensions in inches [mm]			
A	B	Grate Open Area sq in [cm²]	Approximate Weight lb [kg]
2 [51]	1-1/4 [32]	19 [123]	23 [10]
3 [76]	1-1/16 [27]		21 [10]

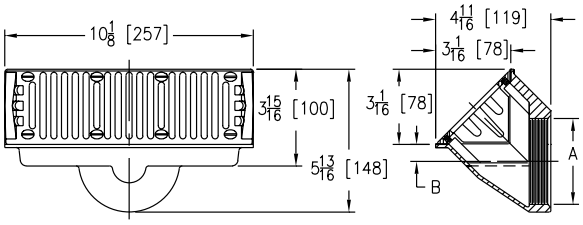

PREFIXES	DESCRIPTION	PIPE SIZE	LIST PRICE
ZARB161*	All Bronze Body with Plain Bronze Grate	2″, 3″	1,091.00
ZAB161	All Bronze Body with Polished Bronze Grate	2″, 3″	1,394.00
ZANB161	All Bronze Body with Polished Nickel Bronze Grate	2″, 3″	1,722.00
OUTLETS (SPECIFY PIPE SIZE IN INCHES AND TYPE OF OUTLET)			
OUTLET TYPE		OUTLET DESIGNATION (PIPE SIZE/OUTLET TYPE)	ADD
IP	Threaded	2IP, 3IP	N/C

*Regularly furnished unless otherwise specified.

This symbol denotes a product that is engineered to reduce installation and rework time.

For additional product information, please visit www.zurn.ca

Z163 15″ [381 MM] DIAMETER COMBINATION MAIN ROOF AND OVERFLOW DRAIN WITH LOW SILHOUETTE DOMES AND DOUBLE TOP-SET® DECK PLATE

PATENTED

ENGINEERING SPECIFICATION

Zurn Z163 15″ [381 mm] diameter roof drain and overflow drain feature Dura-Coated cast iron bodies with combination membrane flashing clamp/gravel guards, double Top-Set® deck plate and low silhouette polydomes.

A Pipe Size inches [mm]	Dome Open Area sq in [cm²]	Approximate Weight lb [kg]
2 [51], 3 [76], 4 [102]	103 [665]	73 [33]
6 [152]		74 [34]
8 [203]		75 [34]

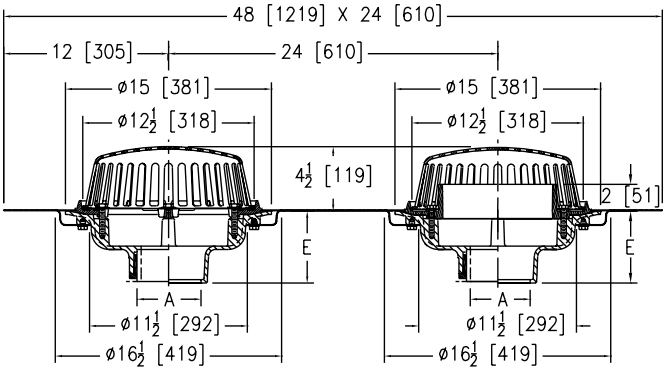

PREFIXES	DESCRIPTION	PIPE SIZE	LIST PRICE
Z163*	D.C.C.I. Body with Polydome	2″, 3″, 4″	1,089.00
		6″	1,394.00
		8″	1,394.00
ZA163	D.C.C.I. Body with Aluminum Dome	2″, 3″, 4″	1,242.00
		6″	1,547.00
		8″	1,547.00
ZC163	D.C.C.I. Body with Cast Iron Dome	2″, 3″, 4″	1,242.00
		6″	1,547.00
		8″	1,547.00

OUTLETS (SPECIFY PIPE SIZE IN INCHES AND TYPE OF OUTLET)

OUTLET	TYPE	OUTLET DESIGNATION (PIPE SIZE/OUTLET TYPE)	E BODY HT. DIM.	ADD
IC	Inside Caulk	3IC, 4IC, 6IC	5-1/4″	N/C
IP	Threaded	2IP, 3IP, 4IP, 6IP, 8IP	3-3/4″	159.00
NH	No-Hub	2NH, 3NH, 4NH, 6NH, 8NH	5-1/4″	N/C
NL	Neo-Loc (not recommended for roof drains)	2NL, 3NL, 4NL	4-5/8″	N/C

SUFFIXES			ADD
–AR	Acid Resistant Epoxy Coated Finish		471.00
–DE	Deck Extension	D.C.C.I.	1,175.00
		Galv.	1,744.00
–DR	Top-Set® Drain Riser		1,051.00
–E	Static Extension 1″ thru 4″ (Specify Height)	D.C.C.I.	357.00
		Galv.	676.00
	For E Extensions Greater than 4″ - Per Inch (Specify Height)	D.C.C.I.	179.00
		Galv.	263.00
–EA	Adjustable Extension Assembly 2-1/8″ thru 3-1/2″	D.C.C.I.	179.00
		Galv.	263.00
–G	Galvanized Cast Iron (ZC Only)	Z	427.00
		ZC	577.00
–HD	6-3/4″High Aluminum Dome Strainer, Open Area 148 Sq. In. (ZA Only)		184.00
–SC	Secondary Clamping Collar		147.00
–SS	Stainless Mesh Screen Over Dome		659.00
–TC	Neo-Loc Test Cap Gasket (2″, 3″, 4″ NL Bottom Outlet Only)		116.00
–VP	Vandal-Proof Secured Top		125.00
–W3	3″ Internal Water Dam		182.00
–W4	4″ Internal Water Dam		198.00
–XJ	Vertical Expansion Joint (See Z190)		–
–84	Stainless Steel Perforated Gravel Guard 1″ thru 4″		306.00
	For Each Additional 1″ above 4″ - Per Inch (Specify Height)		79.00
–85	Stainless Steel Perforated Extension 1″ thru 4″		306.00
	For Each Additional 1″ above 4″ - Per Inch (Specify Height)		79.00
–89	2″ High External Water Dam (Replaces Internal Dam)		127.00

For additional product information, please visit www.zurn.ca

**Regularly furnished unless otherwise specified.*

This symbol denotes a product that is engineered to reduce installation and rework time.

Z164 12" [305 MM] DIAMETER COMBINATION MAIN ROOF AND OVERFLOW DRAIN WITH LOW SILHOUETTE DOMES AND DOUBLE TOP-SET® DECK PLATE

PATENTED

ENGINEERING SPECIFICATION

Zurn Z164 12" [305 mm] diameter roof drain and overflow drain feature Dura-Coated cast iron bodies with combination membrane flashing clamp/gravel guards, double Top-Set® deck plate and low silhouette cast iron domes.

A Pipe Size inches [mm]	Dome Open Area sq in [cm²]	Approximate Weight lb [kg]
2 [51], 3 [76], 4 [102], 6 [152]	78 [503]	66 [30]

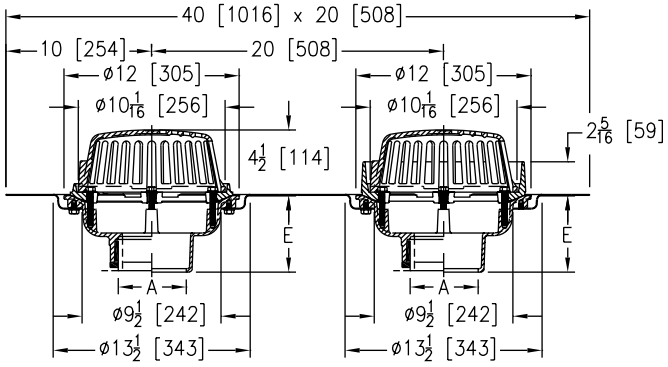

PREFIXES	DESCRIPTION	PIPE SIZE	LIST PRICE
Z164*	D.C.C.I. Body with 4-1/4" Dome	2", 3", 4"	1,307.00
		6"	2,060.00
ZA164	D.C.C.I. Body with 6-9/16" Aluminum Dome	2", 3", 4"	1,835.00
		6"	2,286.00

OUTLETS (SPECIFY PIPE SIZE IN INCHES AND TYPE OF OUTLET)				
OUTLET	TYPE	OUTLET DESIGNATION (PIPE SIZE/OUTLET TYPE)	E BODY HT. DIM.	ADD
IC	Inside Caulk	2IC, 3IC, 4IC, 6IC	5-1/4"	N/C
IP	Threaded	2IP, 3IP, 4IP, 6IP	3-3/4"	159.00
NH	No-Hub	2NH, 3NH, 4NH, 6NH	5-1/4"	N/C
NL	Neo-Loc (not recommended for roof drains)	2NL, 3NL, 4NL	4-5/8"	N/C

SUFFIXES			ADD
–AR	Acid Resistant Epoxy Coated Finish		471.00
–E	Static Extension 1" thru 4"	D.C.C.I.	357.00
		Galv.	676.00
	For Each Additional 1" above 4" - Per Inch (Specify Height)	D.C.C.I.	180.00
		Galv.	338.00
–G	Galvanized Cast Iron		577.00
–SC	Secondary Clamping Collar		147.00
–SS	Stainless Steel Mesh Screen Over Dome		659.00
–TC	Neo-Loc Test Cap Gasket (2", 3", 4" NL Bottom Outlet Only)		116.00
–VP	Vandal-Proof Secured Top		125.00
–XJ	Vertical Expansion Joint (See Z190)		–
–84	Stainless Steel Perforated Gravel Guard 1" thru 4"		79.00
	For Each Additional 1" above 4" - Per Inch (Specify Height)		poa
–85	Stainless Steel Perforated Extension 1" thru 4"		127.00
	For Each Additional 1" above 4" - Per Inch (Specify Height)		POA

*Regularly furnished unless otherwise specified.

This symbol denotes a product that is engineered to reduce installation and rework time.

For additional product information, please visit www.zurn.ca

Z165 8-3/8" [203 MM] DIAMETER COMBINATION MAIN ROOF AND OVERFLOW DRAIN WITH LOW SILHOUETTE DOMES AND DOUBLE TOP-SET® DECK PLATE

PATENTED

ENGINEERING SPECIFICATION

Zurn Z165 8-3/8" [203 mm] diameter roof drain and overflow drain feature Dura-Coated cast iron bodies with combination membrane flashing clamp/ gravel guards, double Top-Set® deck plate, and low silhouette cast iron domes.

A Pipe Size inches [mm]	Dome Open Area sq in [cm²]	Approximate Weight lb [kg]
2 [51], 3 [76], 4 [102]	43 [277]	36 [16]

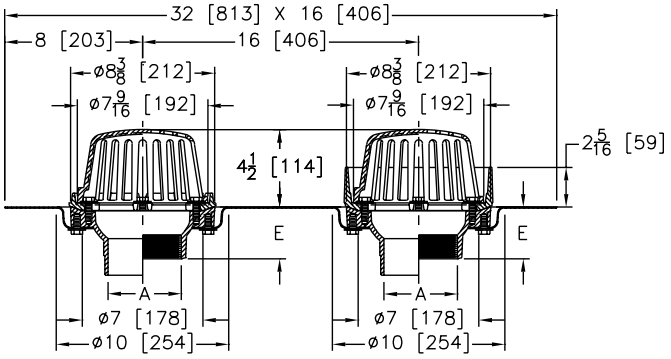

PREFIXES	DESCRIPTION	PIPE SIZE	LIST PRICE
Z165*	D.C.C.I. Body with 4-1/4" Dome	2", 3", 4"	1,242.00
ZA165	D.C.C.I. Body with 4-1/4" Aluminum Dome	2", 3", 4"	1,743.00

OUTLETS (SPECIFY PIPE SIZE IN INCHES AND TYPE OF OUTLET)

OUTLET TYPE		OUTLET DESIGNATION (PIPE SIZE/OUTLET TYPE)	E BODY HT. DIM.	ADD
IC	Inside Caulk	2IC, 3IC, 4IC	3-7/8"	164.00
IP	Threaded	2IP	2-7/16"	164.00
		3IP	2-3/4"	164.00
		4IP	3"	164.00
NH	No-Hub	2NH, 3NH, 4NH	4"	N/C
NL	Neo-Loc (not recommended for roof drains)	2NL, 3NL, 4NL	3-13/16"	N/C

SUFFIXES			ADD
–AR	Acid Resistant Epoxy Coated Finish		471.00
–E	Static Extension 1" thru 4"	D.C.C.I.	357.00
		Galv.	676.00
	For Each Additional 1" above 4" - Per Inch (Specify Height)	D.C.C.I.	180.00
		Galv.	338.00
–G	Galvanized Cast Iron		577.00
–SC	Secondary Clamping Collar		147.00
–SS	Stainless Steel Mesh Screen Over Dome		659.00
–TC	Neo-Loc Test Cap Gasket (2", 3", 4" NL Bottom Outlet Only)		116.00
–VP	Vandal-Proof Secured Top		125.00
–XJ	Vertical Expansion Joint (See Z190) (Use with IP Outlets Only)		–
–84	Stainless Steel Perforated Gravel Guard 1" thru 4"		79.00
	For Each Additional 1" above 4" - Per Inch (Specify Height)		POA
–85	Stainless Steel Perforated Extension 1" thru 4"		127.00
	For Each Additional 1" above 4" - Per Inch (Specify Height)		POA

Z180 4-1/2" [114 MM] DIAMETER CORNICE DRAIN WITH BOTTOM OUTLET

ENGINEERING SPECIFICATION

Zurn ZRB180 4-1/2" [114 mm] diameter by 2" [51 mm] high cornice drain features Dura-Coated cast iron body, plain bronze dome, and membrane flashing clamp.

A Pipe Size inches [mm]	Dome Open Area sq in [cm²]	Approximate Weight lb [kg]
2 [51], 3 [76]	4.5 [29]	5 [2]

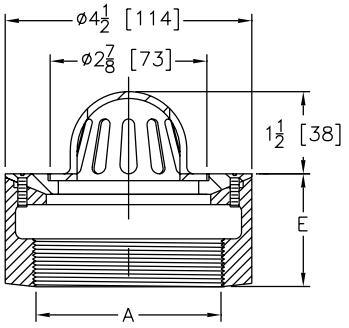

PREFIXES	DESCRIPTION	PIPE SIZE	LIST PRICE
ZRB180*	D.C.C.I. Body with Plain Bronze Dome	2", 3"	409.00
ZN180	D.C.C.I. Body with Polished Nickel Bronze Dome	2", 3"	612.00

OUTLETS (SPECIFY PIPE SIZE IN INCHES AND TYPE OF OUTLET)

OUTLET TYPE		OUTLET DESIGNATION (PIPE SIZE/OUTLET TYPE)	E BODY HT. DIM.	ADD
IP	Threaded	2IP, 3IP	2"	N/C
NH	No-Hub (IP w/Z1040)	2NH, 3NH	4-1/2"	N/C

SUFFIXES		ADD
–FS	Flat Strainer (ZN)	N/C
–G	Galvanized Cast Iron	193.00
–VP	Vandal-Proof Secured Top	116.00

For additional product information, please visit www.zurn.ca

**Regularly furnished unless otherwise specified.*

This symbol denotes a product that is engineered to reduce installation and rework time.

Z181 6″ [152 MM] DIAMETER CORNICE DRAIN WITH BOTTOM OUTLET

ENGINEERING SPECIFICATION

Zurn ZRB181 6″ [152 mm] diameter by 2″ [51 mm] high cornice drain features Dura-Coated cast iron body, plain bronze dome, and membrane flashing clamp.

A Pipe Size inches [mm]	Dome Open Area sq in [cm²]	Approximate Weight lb [kg]
3 [76]	11 [71]	6 [3]
4 [102]		7 [3]

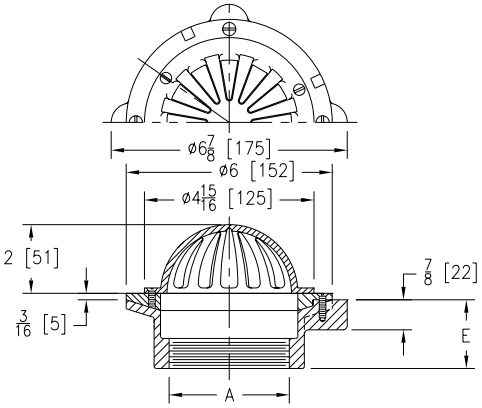

PREFIXES	DESCRIPTION	PIPE SIZE	LIST PRICE
ZRB181*	D.C.C.I. Body with Plain Bronze Dome	3″	357.00
		4″	758.00
ZN181	D.C.C.I. Body with Polished Nickel Bronze Dome	3″	559.00
		4″	909.00

OUTLETS (SPECIFY PIPE SIZE IN INCHES AND TYPE OF OUTLET)				
OUTLET TYPE		OUTLET DESIGNATION (PIPE SIZE/OUTLET TYPE)	E BODY HT. DIM.	ADD
IP	Threaded	3IP, 4IP	2″	N/C
NH	No-Hub (IP w/Z1040)	3NH, 4NH	4-1/2″	N/C

SUFFIXES			ADD
–BS	Bronze Mesh Screen Over Dome		425.00
–C	Underdeck Clamp		108.00
–FS	Flat Strainer (ZN)		N/C
–G	Galvanized Cast Iron		193.00
–HD	5-3/4″ High Dome	ZRB	70.00
		ZN	97.00
–R	Roof Sump Receiver		149.00
–SS	Stainless Steel Mesh Screen Over Dome		659.00
–VP	Vandal-Proof Secured Top		116.00

Z182 4-1/2″ [114 MM] DIAMETER CORNICE DRAIN WITH 90° OUTLET

ENGINEERING SPECIFICATION

Zurn ZRB182 4-1/2″ [114 mm] diameter cornice drain features Dura-Coated cast iron 90° side outlet body, plain bronze dome, and membrane flashing clamp.

A Pipe Size inches [mm]	Dome Open Area sq in [cm²]	Approximate Weight lb [kg]
2 [51]	4.5 [29]	5 [2]

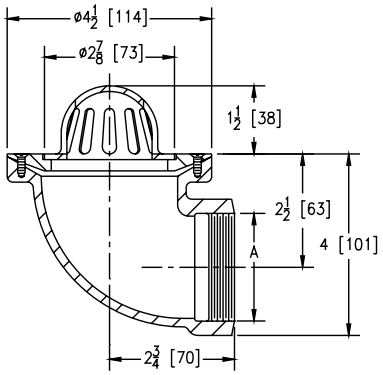

PREFIXES	DESCRIPTION	PIPE SIZE	LIST PRICE
ZRB182*	D.C.C.I. Body with Plain Bronze Dome	2″	659.00
ZN182	D.C.C.I. Body with Polished Nickel Bronze Dome	2″	785.00

OUTLETS (SPECIFY PIPE SIZE IN INCHES AND TYPE OF OUTLET)			
OUTLET TYPE		OUTLET DESIGNATION (PIPE SIZE/OUTLET TYPE)	ADD
IP	Threaded	2IP	N/C

SUFFIXES		ADD
–FS	Flat Strainer (ZN)	N/C
–G	Galvanized Cast Iron	193.00
–VP	Vandal-Proof Secured Top	116.00

*Regularly furnished unless otherwise specified.

This symbol denotes a product that is engineered to reduce installation and rework time.

For additional product information, please visit www.zurn.ca

Z185 6" [152 MM] DIAMETER CORNICE DRAIN WITH 90° OUTLET

ENGINEERING SPECIFICATION

Zurn ZRB185 6" [152 mm] diameter cornice drain features Dura-Coated cast iron 90° side outlet body, plain bronze dome, and membrane flashing clamp.

A Pipe Size inches [mm]	Dome Open Area sq in [cm²]	Approximate Weight lb [kg]
3 [76]	11 [71]	8 [4]
4 [102]		10 [5]

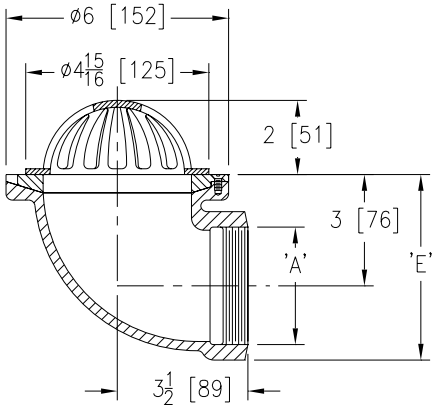

PREFIXES	DESCRIPTION	PIPE SIZE		LIST PRICE
ZRB185*	D.C.C.I. Body with Plain Bronze Dome	3", 4"		686.00
ZN185	D.C.C.I. Body with Polished Nickel Bronze Dome	3", 4"		825.00
OUTLETS (SPECIFY PIPE SIZE IN INCHES AND TYPE OF OUTLET)				
OUTLET TYPE		**OUTLET DESIGNATION (PIPE SIZE/OUTLET TYPE)**	**E BODY HT. DIM.**	**ADD**
IP	Threaded	3IP	5-1/8"	N/C
		4IP	5-5/8"	N/C
SUFFIXES				**ADD**
–FS	Flat Strainer (ZN)			N/C
–G	Galvanized Cast Iron			193.00
–HD	5-3/4" High Dome		ZRB	70.00
			ZN	97.00
–VP	Vandal-Proof Secured Top			116.00
–45	45° Side Outlet Body			N/C

Z187 6" X 7" [152 MM X 178 MM] OR 8" X 12" [203 MM X 305 MM] OBLIQUE SCUPPER DRAIN

ENGINEERING SPECIFICATION

Zurn Z187 6" x 7" [152 mm x 178 mm] or 8" x 12" [203 mm x 305 mm] scupper drain features Dura-Coated cast iron body with reversible back or bottom outlet, oblique aluminum grate with 90° combination frame, and membrane flashing clamp.

Dimensions in inches [mm]						Approximate Weight lb [kg]
A	B	H	L	M	Grate Open Area sq in[cm²]	
2 [51]	7-1/2 [191]	2-3/4 [70]	6-3/8 [162]	6-11/16 [170]	31 [200]	22 [10]
3 [76]				6-5/32 [156]		20 [9]
4 [102]				5-5/8 [143]		20 [9]
6 [152]	12-1/2 [318]	3-1/2 [89]	8-3/8 [213]	7-3/8 [187]	72 [465]	32 [15]
8 [203]				6-3/8 [162]		33 [15]

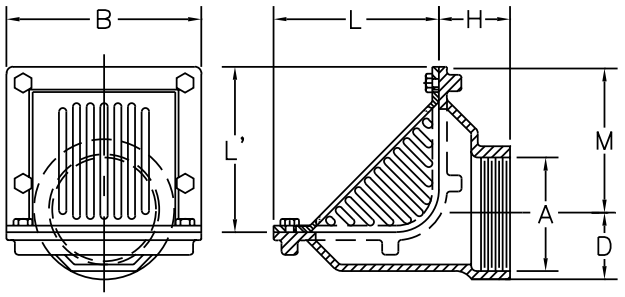

PREFIXES	DESCRIPTION	PIPE SIZE		LIST PRICE
Z187*	D.C.C.I. Body with Grate	2", 3", 4"		665.00
		6", 8"		1,146.00
ZN187	D.C.C.I. Body with Polished Nickel Bronze Grate	2", 3", 4"		1,031.00
		6", 8"		1,678.00
OUTLETS (SPECIFY PIPE SIZE IN INCHES AND TYPE OF OUTLET)				
OUTLET TYPE		**OUTLET DESIGNATION (PIPE SIZE/OUTLET TYPE)**	**E BODY HT. DIM.**	**ADD**
IP	Threaded	2IP, 3IP, 4IP	8-3/16"	N/C
		6IP, 8IP	11"	N/C
SUFFIXES				**ADD**
–BS	Bronze Mesh Screen Over Grate			425.00
–FG	Flush Grate	2", 3", 4"	Z, ZN	46.00
		6", 8"	Z	46.00
			ZN	93.00
–G	Galvanized Cast Iron		2", 3", 4"	214.00
			6", 8"	345.00
–VP	Vandal-Proof Secured Top			116.00

For additional product information, please visit www.zurn.ca

**Regularly furnished unless otherwise specified.*

This symbol denotes a product that is engineered to reduce installation and rework time.

Z189 5″ X 6″ X 11″ [127 MM X 152 MM X 279 MM] SCUPPER DRAIN

ENGINEERING SPECIFICATION

Zurn Z189 5″ x 6″ x 11″ [127 mm x 152 mm x 279 mm] scupper drain features Dura-Coated cast iron body with 45° outlet and flush type aluminum strainer with combination aluminum frame and membrane flashing clamp.

A Pipe Size inches [mm]	Grate Open Area sq in [cm²]	Approximate Weight lb [kg]
2 [51]	20 [129]	18 [8]
3 [76]		
4 [102]		

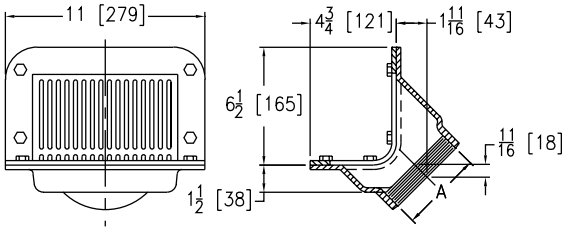

PREFIXES	DESCRIPTION	PIPE SIZE	LIST PRICE
Z189*	D.C.C.I. Body with Aluminum Grate	2″, 3″, 4″	627.00
ZB189	D.C.C.I. Body with Polished Bronze Grate	2″, 3″, 4″	865.00
ZN189	D.C.C.I. Body with Polished Nickel Bronze Grate	2″, 3″, 4″	1,033.00
OUTLETS (SPECIFY PIPE SIZE IN INCHES AND TYPE OF OUTLET)			
OUTLET TYPE		**OUTLET DESIGNATION (PIPE SIZE/OUTLET TYPE)**	**ADD**
IP	Threaded	2IP, 3IP, 4IP	N/C
NH	No-Hub (IP w/Z1040)	2NH, 3NH, 4NH	N/C
SUFFIXES			**ADD**
–G	Galvanized Cast Iron		214.00
–TS	Secured Top		116.00
–VP	Vandal-Proof Secured Top		116.00
–90	Threaded Side Outlet Body		N/C

Z190 VERTICAL EXPANSION JOINT

ENGINEERING SPECIFICATION

Zurn ZRB190 vertical expansion joint features Dura-Coated cast iron body, packing gland, and siliconed bronze sleeve with preformed neoprene packing gasket.

Dimensions in inches [mm]						Approximate Weight lb [kg]
	B					
A	Min.	Max.	C	D	F	
2 [51]	6-1/2 [165]	8-1/2 [216]	3-5/8 [92]	5 [127]	2-3/4 [70]	8 [4]
3 [76]			4-5/8 [117]		3-1/4 [83]	11 [5]
4 [102]			5-1/2 [140]	4-3/4 [121]	3-3/4 [95]	13 [6]
6 [152]	6-7/8 [175]	8-5/8 [219]	7-7/8 [200]	5 [127]	5 [127]	25 [11]
8 [203]	7-7/8 [200]	10-7/8 [276]	9-7/8 [251]		6 [152]	35 [16]
10 [254]			11-3/4 [298]	6 [152]	6-7/8 [175]	45 [20]

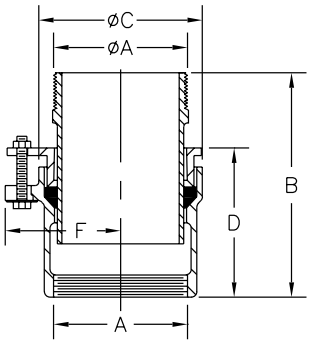

PREFIXES	DESCRIPTION	PIPE SIZE	LIST PRICE
ZRB190*	D.C.C.I. Body with Polished Bronze Sleeve	2″	824.00
		3″	882.00
		4″	1,000.00
		6″	1,692.00
		8″	2,922.00
		10″	6,083.00

OUTLETS (SPECIFY PIPE SIZE IN INCHES AND TYPE OF OUTLET)				
OUTLET TYPE		**OUTLET DESIGNATION (PIPE SIZE/OUTLET TYPE)**	**'D' BODY HT. DIM.**	**ADD**
IP	Threaded	2IP, 3IP, 4IP, 6IP, 8IP, 10IP	(See Chart)	N/C
NH	No-Hub	2NH, 3NH, 4NH, 6NH, 8NH, 10NH	(See Chart)	N/C
SUFFIXES				**ADD**
–G	Galvanized Cast Iron			291.00

*Regularly furnished unless otherwise specified.

This symbol denotes a product that is engineered to reduce installation and rework time.

For additional product information, please visit www.zurn.ca

Z191 5″ X 4″ X 24″ [127 MM X 102 MM X 610 MM] DOWNSPOUT BOOT

ENGINEERING SPECIFICATION

Zurn Z191 5″ x 4″ x 24″ [127 mm x 102 mm x 610 mm] downspout boot features Dura-Coated cast iron body and strap with 1/4″ [6 mm] diameter cast holes for flat-head bolts.

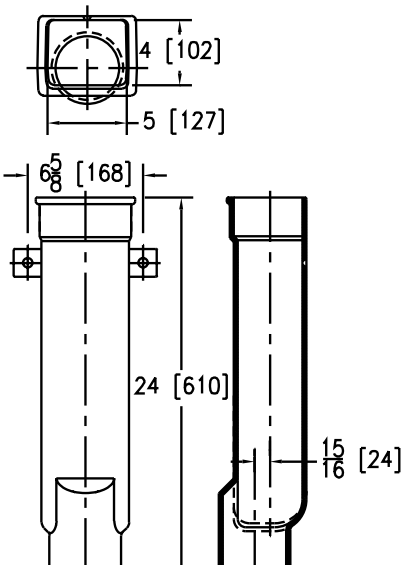

Product Designation	Dimensions in inches [mm]		Approximate Weight lb [kg]
	Size	A	
-24	5 [127] x 4 [102] x 24 [610]	4 [102]	30 [14]

PREFIXES	DESCRIPTION	A PIPE SIZE	LIST PRICE
Z191*	D.C.C.I. Body	4″	1,570.00
OUTLETS (SPECIFY PIPE SIZE IN INCHES AND TYPE OF OUTLET)			
OUTLET TYPE		OUTLET DESIGNATION (PIPE SIZE/OUTLET TYPE)	ADD
NH	No-Hub	4NH	N/C
SUFFIXES			ADD
–CA	Cleanout Access with Plug		721.00
–G	Galvanized Cast Iron		678.00

Z191-RD 4″ X 18″ [127 MM X 457 MM] DOWNSPOUT BOOT

ENGINEERING SPECIFICATION

Zurn Z191-RD 4″ x 18″ [127 mm x 457 mm] downspout boot features Dura-Coated cast iron body, round inlet and outlet, and strap with 1/4″ [6 mm] diameter cast holes for flat-head bolts.

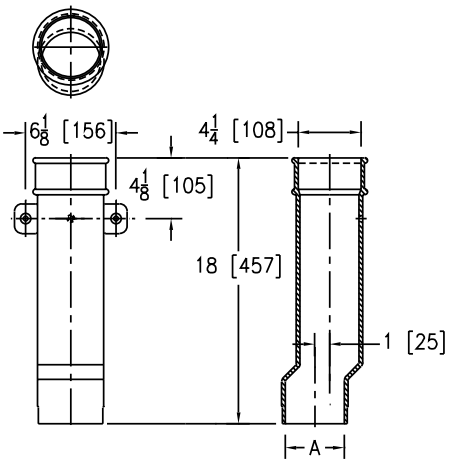

Product Designation	Dimensions in inches [mm]		Approximate Weight lb [kg]
	Size	A	
-18	4 [102] x 18 [457]	4 [102]	20 [9]

PREFIXES	DESCRIPTION	A PIPE SIZE	LIST PRICE
Z191–RD*	D.C.C.I. Body	4″	1,570.00
OUTLETS (SPECIFY PIPE SIZE IN INCHES AND TYPE OF OUTLET)			
OUTLET TYPE		OUTLET DESIGNATION (PIPE SIZE/OUTLET TYPE)	ADD
NH	No-Hub	4NH	N/C
SUFFIXES			ADD
–CA	Cleanout Access with Plug		721.00
–G	Galvanized Cast Iron		678.00

For additional product information, please visit www.zurn.ca

**Regularly furnished unless otherwise specified.*

This symbol denotes a product that is engineered to reduce installation and rework time.

Z192 4" X 3" [102 MM X 76 MM] DOWNSPOUT BOOT

ENGINEERING SPECIFICATION

Zurn Z192 4" x 3" [102 mm x 76 mm] downspout boot features Dura-Coated cast iron body and strap with 1/4" [6 mm] diameter cast holes for flat head bolts.

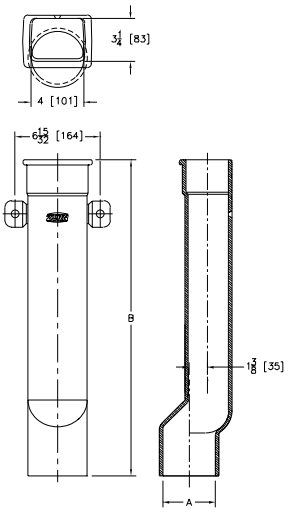

Product Designation	Dimensions in inches [mm]			Approximate Weight lb [kg]
	Size	A	B	
-12	4 [102] x 3 [76] x 12 [305]	4 [102]	12 [305]	14 [6]
-18	4 [102] x 3 [76] x 18 [457]		18 [457]	20 [9]
-24	4 [102] x 3 [76] x 24 [610]		24 [610]	27 [12]

PREFIXES	DESCRIPTION	PRODUCT DESIGNATION	LIST PRICE
Z192*	D.C.C.I. Body	-12	717.00
		-18	940.00
		-24	1,677.00
OUTLETS (SPECIFY PIPE SIZE IN INCHES AND TYPE OF OUTLET)			
OUTLET TYPE		**OUTLET DESIGNATION (PIPE SIZE/OUTLET TYPE)**	**ADD**
NH	No Hub	4NH	N/C
SUFFIXES			**ADD**
–CA	Cleanout Access with Plug		721.00
–G	Galvanized Cast Iron		678.00

Z193 VANDAL-PROOF HOODED VENT CAP

ENGINEERING SPECIFICATION

Zurn Z193 vandal-proof vent cap features Dura-Coated cast iron body and hooded dome cap, vandal-proof securing device.

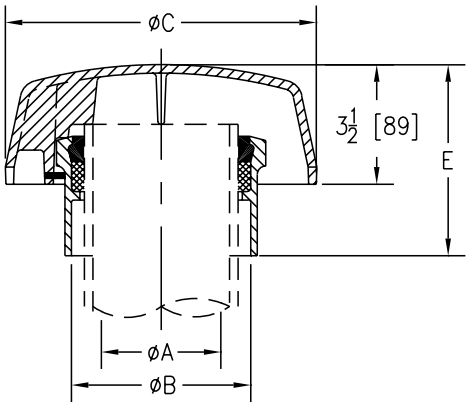

Dimensions in inches [mm]			Open Area Sq.	Approximate Weight lb [kg]
A	B	C		
1-1/2 [38], 2 [51]	3-1/8 [79]	6-3/8 [162]	2 : 1	9 [4]
3 [76]	4-3/16 [106]	7-5/8 [194]		12 [5]
4 [102]	5-1/4 [133]	9-1/8 [232]		14 [6]
5 [127]	6-3/16 [157]	10-1/8 [257]		16 [7]
6 [152]	7-3/16 [183]	11-5/8 [295]		18 [8]

PREFIXES	DESCRIPTION	PIPE SIZE		LIST PRICE
Z193*	D.C.C.I. Body and Dome Cap	1-1/2", 2"		751.00
		3"		751.00
		4"		751.00
		5"		889.00
		6"		953.00
OUTLETS (SPECIFY PIPE SIZE IN INCHES AND TYPE OF OUTLET)				
OUTLET TYPE		**OUTLET DESIGNATION (PIPE SIZE/OUTLET TYPE)**	**E BODY HT. DIM.**	**ADD**
IC	Inside Caulk	1.5IC, 2IC	5-11/16"	N/C
		3IC, 4IC, 5IC, 6IC	5-9/16"	N/C
SUFFIXES				**ADD**
–G	Galvanized Cast Iron			214.00

**Regularly furnished unless otherwise specified.*

This symbol denotes a product that is engineered to reduce installation and rework time.

For additional product information, please visit www.zurn.ca

Z195 VENT STACK FLASHING SLEEVE

ENGINEERING SPECIFICATION

Zurn Z195 vent stack flashing sleeve features Dura-Coated cast iron body with fixed position combination membrane flashing flange and clamp.

Dimensions in inches [mm]				Approximate Weight lb [kg]
A	C	D	K	
2 [51]	6-1/2 [165]	3-1/8 [79]	3 [76]	11 [5]
3 [76]	8-1/2 [216]	4-1/4 [108]	3-1/8 [79]	13 [6]
4 [102]		5-1/4 [133]		18 [8]
5 [127]	9-1/2 [241]	6-1/2 [165]	2-1/2 [64]	20 [9]
6 [152]	10-1/2 [267]	7-1/2 [191]	3-1/8 [79]	26 [12]
8 [203]	14-1/2 [368]	9-3/4 [248]	2-3/4 [70]	52 [24]

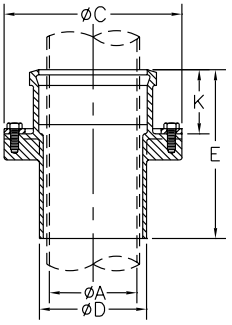

PREFIXES	DESCRIPTION	PIPE SIZE		LIST PRICE
Z195*	D.C.C.I. Body	2″		378.00
		3″, 4″		607.00
		5″, 6″		1,104.00
		8″		1,291.00
OUTLETS (SPECIFY PIPE SIZE IN INCHES AND TYPE OF OUTLET)				
OUTLET TYPE		**OUTLET DESIGNATION (PIPE SIZE/OUTLET TYPE)**	**E BODY HT. DIM.**	**ADD**
IC	Inside Caulk	2IC	8″	N/C
		3IC, 4IC, 6IC	8-1/8″	N/C
		5IC	8-1/2″	N/C
		8IC	8-3/4″	N/C
SUFFIXES				**ADD**
–CF	Bottom Clamping Flange	D.C.	2″ thru 6″	153.00
			8″	289.00
		Galv.	2″ thru 6″	214.00
			8″	393.00
–G	Galvanized Cast Iron			407.00

Z196 VENT STACK FLASHING SLEEVE

ENGINEERING SPECIFICATION

Zurn Z196 vent stack flashing sleeve features Dura-Coated cast iron body, inside caulk type.

Dimensions in inches [mm]		Approximate Weight lb [kg]
A	B	
1-1/2 [38]	3 [76]	2 [10]
2 [51]	3-1/2 [89]	3 [1]
3 [76]	4-3/4 [121]	4 [2]
4 [102]	5-5/8 [143]	
6 [152]	7-3/4 [197]	7 [3]

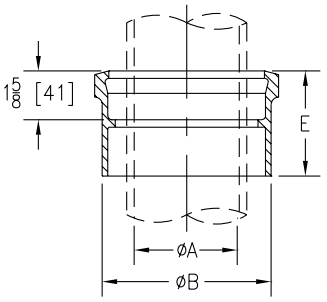

PREFIXES	DESCRIPTION	PIPE SIZE		LIST PRICE
Z196*	D.C.C.I. Body	1-1/2″, 2″		98.00
		3″		169.00
		4″		189.00
		6″		478.00
OUTLETS (SPECIFY PIPE SIZE IN INCHES AND TYPE OF OUTLET)				
OUTLET TYPE		**OUTLET DESIGNATION (PIPE SIZE/OUTLET TYPE)**	**E BODY HT. DIM.**	**ADD**
IC	Inside Caulk	1.5C, 2IC, 3IC, 4IC, 6IC	3-1/2″	N/C
SUFFIXES				**ADD**
–G	Galvanized Cast Iron			236.00

For additional product information, please visit www.zurn.ca

**Regularly furnished unless otherwise specified.*

This symbol denotes a product that is engineered to reduce installation and rework time.

Z197 RISER SLEEVE

ENGINEERING SPECIFICATION

Zurn Z197 riser sleeve features Dura-Coated cast iron body, double threaded pipe connector with combination membrane flashing flange. (Pipe sleeve furnished by others.)

Dimensions in inches [mm]					Approximate Weight lb [kg]
A	B	C	D	E	
1-1/2 [38]	2-1/2 [64]	6-1/2 [165]	4 [102]	2-3/4 [70]	6 [3]
2 [51]	3 [76]				7 [3]
3 [76]	4 [102]				9 [4]
4 [102]	5 [127]	8-1/2 [216]	6 [152]	3-1/4 [83]	10 [5]
5 [127]	6 [152]	9-1/2 [241]	7-1/8 [181]	3-3/8 [86]	13 [6]
6 [152]	8 [203]	11-7/8 [302]	9-3/8 [238]	3-5/8 [92]	19 [9]

PREFIXES	DESCRIPTION	PIPE SIZE	LIST PRICE
Z197*	D.C.C.I. Body	1-1/2″	610.00
		2″, 3″	674.00
		4″	935.00
		5″	968.00
		6″	1,351.00
OUTLETS (SPECIFY PIPE SIZE IN INCHES AND TYPE OF OUTLET)			
OUTLET TYPE		**OUTLET DESIGNATION (PIPE SIZE/OUTLET TYPE)**	**ADD**
IP	Threaded	1.5IP, 2IP, 3IP, 4IP, 5IP, 6IP	N/C
SUFFIXES			**ADD**
–G	Galvanized Cast Iron		407.00

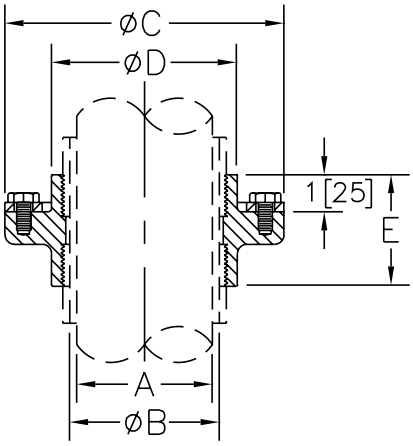

Z198 PARAPET SCUPPER SLEEVE

ENGINEERING SPECIFICATION

Zurn Z198 parapet scupper sleeve features Dura-Coated cast iron body with fixed position combination membrane flashing flange and clamp and parapet wall face closing.

Product Designation	Dimensions in inches [mm]		Approximate Weight lb [kg]
	A Pipe Size	B Wall Thickness	
-8	4 [102]	8-1/2 [216]	26 [12]
-11		11 [279]	29 [13]
-13		13-1/2 [343]	31 [14]
-17		17-1/2 [445]	35 [16]
-22		22-1/2 [572]	40 [18]

PREFIXES	DESCRIPTION	PRODUCT DESIGNATION	LIST PRICE
Z198*	D.C.C.I. Body	-8, -11	1,008.00
		-13	1,174.00
		-17	1,374.00
		-22	1,471.00
OUTLETS (SPECIFY PIPE SIZE IN INCHES AND TYPE OF OUTLET)			
OUTLET TYPE		**OUTLET DESIGNATION (PIPE SIZE/OUTLET TYPE)**	**ADD**
HB	Hub	4HB	N/C
SUFFIXES			**ADD**
–G	Galvanized Cast Iron		616.00

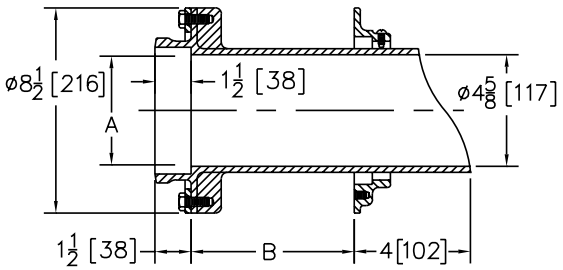

*Regularly furnished unless otherwise specified.

This symbol denotes a product that is engineered to reduce installation and rework time.

For additional product information, please visit www.zurn.ca

Z199 DOWNSPOUT NOZZLE

ENGINEERING SPECIFICATION

Zurn ZANB199 downspout nozzle features all nickel bronze body, optional threaded or no-hub inlet and decorative face of wall flange and outlet nozzle.

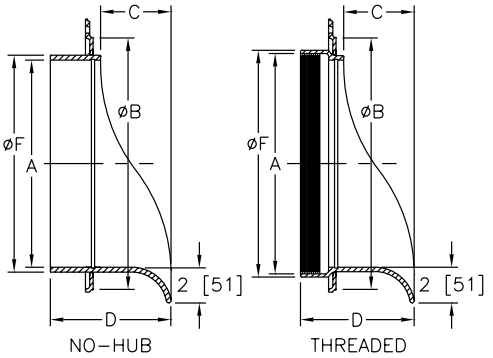

PREFIXES	DESCRIPTION	PIPE SIZE	LIST PRICE
ZANB199*	All Nickel Bronze Body	2″, 3″, 4″	679.00
		5″, 6″	1,311.00
		8″	1,428.00
		10″	2,101.00
		12″	2,770.00
ZARB199	All Plain Bronze Body	2″, 3″, 4″	679.00
		5″, 6″	1,311.00
		8″	1,428.00
		10″	2,101.00
		12″	2,770.00

OUTLETS (SPECIFY PIPE SIZE IN INCHES AND TYPE OF OUTLET)			
OUTLET TYPE		OUTLET DESIGNATION (PIPE SIZE/OUTLET TYPE)	ADD
IP	Threaded	2IP, 3IP, 4IP, 5IP, 6IP, 8IP, 10IP, 12IP	N/C
PVC	IP Threaded	2PVC, 3PVC, 4PVC, 5PVC, 6PVC, 8PVC, 10PVC, 12PVC	N/C
NH	No-Hub	2NH, 3NH, 4NH, 5NH, 6NH, 8NH, 10NH, 12NH	N/C
SUFFIXES			ADD
–SS	Removable Stainless Screen		400.00

Dimensions in inches [mm]							Approximate Weight lb [kg]
			D		F		
A	B	C	IP/PVC	NH	IP/PVC	NH	
2 [51]	4-1/2 [114]	2-5/8 [67]	4-1/2 [114]	4-1/2 [114]	2-13/16 [71]	2-3/8 [60]	5 [2]
3 [76]	5-1/2 [140]	2-5/8 [67]			3-15/16 [100]	3-3/8 [86]	6 [3]
4 [102]	6-5/8 [168]	2-43/64 [68]			4-15/16 [125]	4-3/8 [111]	7 [3]
5 [127]	7-5/8 [194]	3-1/16 [78]	4-59/64 [125]	5-15/32 [139]	6-1/16 [154]	5-5/16 [135]	12 [5]
6 [152]	8-5/8 [219]	3-3/32 [79]			7-1/8 [181]	6-5/16 [160]	13 [6]
8 [203]	10-5/8 [270]	2-31/32 [75]		5-25/32 [147]	9-1/8 [232]	8-3/8 [213]	14 [6]
10 [254]	12-5/8 [321]	3-1/2 [89]	5-53/64 [148]	6-5/16 [160]	11-5/32 [283]	10-9/16 [268]	15 [7]
12 [305]	14-5/8 [371]	4-5/64 [104]	6-13/32 [163]	6-57/64 [175]	13-5/32 [334]	12-1/2 [318]	18 [8]

For additional product information, please visit www.zurn.ca

**Regularly furnished unless otherwise specified.*

This symbol denotes a product that is engineered to reduce installation and rework time.

ZF199 CHAMELEON DOWNSPOUT NOZZLE WITH FLAPPER

ENGINEERING SPECIFICATION

Downspout nozzle, all aluminum body, downspout gasket for cast iron or PVC inlet with powder coated face of wall flange, outlet nozzle, and perforated hinged flapper.

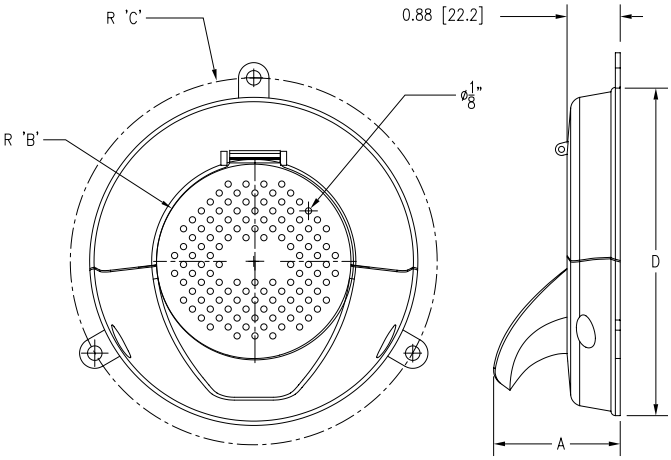

PREFIXES	DESCRIPTION	PIPE SIZE	LIST PRICE
ZF199	All Aluminum Body*	2″	POA
		3″	POA
		4″	POA
		6″	POA
		8″	POA
		10″	POA

OUTLETS (SPECIFY PIPE SIZE IN INCHES AND TYPE OF OUTLET)			
OUTLET TYPE		OUTLET DESIGNATION (PIPE SIZE/OUTLET TYPE)	ADD
DSG	Downspout Gasket	2DSG, 3DSG, 4DSG, 6DSG, 8DSG, 10DSG	POA

COLORS (MUST SPECIFY COLOR)		ADD
-BW	Bone White Powder Coating	POA
-JB	Jet Black Powder Coating	POA
-MB	Medium Bronze Powder Coating	POA
-SAN	Sandstone Powder Coating	POA
-SGR	Satin Gray Powder Coating	POA

Dimensions in inches [mm]					Approximate Weight lb [kg]
Pipe Size	A	B	C	D	
2[51]	2.5 [6.4]	1 [2.5]	2.7 [69]	5.31 [135]	0.51 [0.23]
3 [76]	2.5 [6.4]	1.5 [38]	3.27 [83]	5.75 [146]	1.07 [0.49]
4 [102]	2.5 [6.4]	2 [51]	3.77 [96]	6.75 [171]	1.11 [0.50]
6 [152]	2.5 [6.4]	3 [76]	4.77 [121]	8.75 [222]	1.75 [0.79]
8 [203]	2.5 [6.4]	4 [102]	5.84 [148]	10.85 [275]	2.53 [1.15]
10 [254]	2.5 [6.4]	5 [127]	6.90 [175]	13.71 [348]	3.21 [1.46]

**Regularly furnished unless otherwise specified.*

This symbol denotes a product that is engineered to reduce installation and rework time.

For additional product information, please visit www.zurn.ca

Z199-DC DOWNSPOUT COVER

ENGINEERING SPECIFICATION

Zurn ZS199-DC downspout cover features round fabricated stainless steel frame with fabricated, secured, perforated, stainless steel hinged strainer.

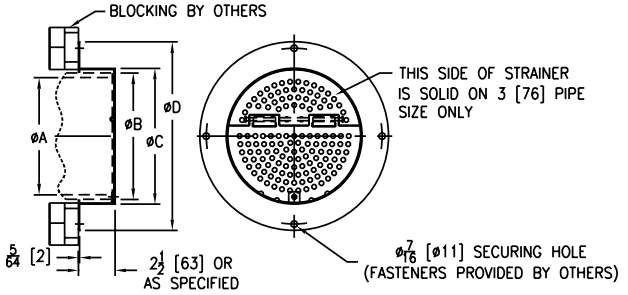

PREFIXES	DESCRIPTION	PIPE SIZE		LIST PRICE
ZS199-DC*	Type 304 Stainless Steel	3″		2,435.00
		4″		2,435.00
		6″		2,570.00
		8″		2,695.00
		10″		2,852.00
		12″		3,022.00
		15″		3,195.00
SUFFIXES				**ADD**
-CP	Chrome Plated			525.00
-VP	Vandal Proof Secured Top			120.00
-5	5″ Long Downspout Frame		3″	N/C
			4″	N/C
			6″	POA
			8″	POA
			10″	POA
			12″	POA
			15″	POA

Dimensions in inches [mm]				Strainer Open Area sq in [cm²]
A	B	C	D	
3 [76]	3-1/2 [89]	4-1/4 [108]	7-7/8 [200]	1-1/2 [9.7]
4 [102]	4-1/2 [114]	5-5/32 [131]	8-3/4 [222]	3-5/16 [21]
6 [152]	6-5/8 [168]	7-1/4 [184]	10-7/8 [276]	5-1/2 [35]
8 [203]	8-5/8 [219]	9-1/4 [235]	12-7/8 [327]	10-5/16 [67]
10 [254]	10-3/4 [273]	11-3/8 [289]	15 [381]	17-13/16 [50]
12 [305]	12-3/4 [324]	13-3/8 [340]	17 [432]	27 [174]
15 [381]	15-7/8 [403]	16-1/2 [419]	20-1/8 [511]	43-5/16 [279]

ZF7000 FLOW SENSOR

PREFIXES	DESCRIPTION	LIST PRICE
ZF7001	Single Channel Flow Sensor Control Module	POA
ZF7005	5 Channel Flow Sensor Control Module	POA
SUFFIXES		**ADD**
-BMS	Building Management System for Flow Sensor(s)	POA

Approximate Weight oz [g]
9.4 [265]

ENGINEERING SPECIFICATION

Froet™ flow sensor. Indication of a primary system blockage or excessive flow through the outlet pipe. Outputs are current or voltage that will provide for connection to building management systems or control valve actuators. Power is supplied to the unit from a 120 volt to 12 volt plug in transformer included with the sensor.

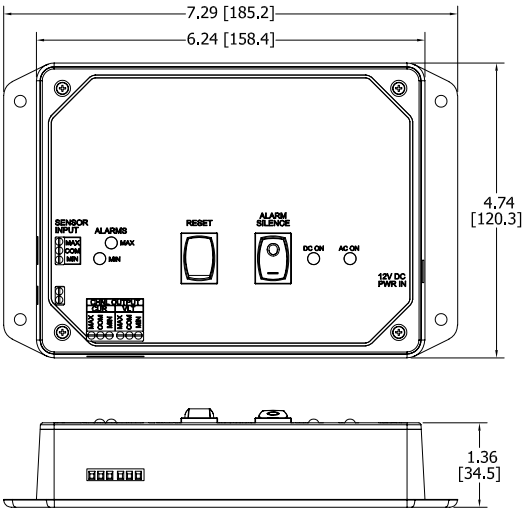

For additional product information, please visit www.zurn.ca

**Regularly furnished unless otherwise specified.*

This symbol denotes a product that is engineered to reduce installation and rework time.

FLOOR DRAINS

FLOOR DRAINS - GENERAL INFORMATION 64

FLOOR DRAINS - APPLICATION INDEX 64

CAST IRON EZ1™ NOMENCLATURE DECODER 65

Z211 FLOOR DRAIN BODY ONLY 66

Z211-A FLOOR DRAIN WITH ROUND STRAINER 66

ZN211-B FLOOR AND SHOWER DRAIN WITH ROUND NICKEL BRONZE STRAINER 67

ZN211-BE ROUND FUNNEL NICKEL BRONZE FLOOR DRAIN 67

ZN211-BF OVAL OPEN THROAT FUNNEL NICKEL BRONZE FLOOR DRAIN 68

ZXN211-H FLOOR DRAIN WITH HEAVY DUTY SQUARE STRAINER 68

ZN211-Y FLOOR AND SHOWER DRAIN WITH SQUARE NICKEL BRONZE STRAINER 69

ZX211-Y FLOOR DRAIN WITH SQUARE HEAVY-DUTY CAST IRON STRAINER 69

Z300 THOROFLUSH DRAIN 70

Z310 THOROFLUSH DRAIN 70

Z315 VANDAL-PROOF ACCESS DRAIN 71

Z319 THOROFLUSH DRAIN – LARGE CAPACITY 71

Z320 REFRIGERATOR DRAIN 72

Z325 INDIRECT WASTE FUNNEL WITH INTEGRAL BACKWATER VALVE 72

Z326 INDIRECT WASTE FUNNEL 73

Z328 FUNNEL CONVERTING ASSEMBLY 73

Z329 FUNNEL CONVERTING ASSEMBLY 74

Z349 TERRACE PLANTING AREA DRAIN 75

Z350 PLANTING AREA DRAIN 75

Z355 PRISON CELL FLOOR DRAIN 76

ZXN400 "TYPE A" HEAVY-DUTY NICKEL BRONZE ROUND STRAINER 76

ZX400 "TYPE A" HEAVY-DUTY CAST IRON STRAINER 77

ZN400 "TYPE B" ROUND STRAINER WITH HEEL-PROOF SQUARE OPENINGS 77

ZS400 "TYPE B" ROUND STAINLESS STEEL STRAINER 78

ZS400 "TYPE BS" ROUND STRAINER WITH SLOTTED OPENINGS 78

ZN400 "TYPE BF" ROUND NICKEL BRONZE STRAINER WITH OVAL FUNNEL - OPEN THROAT 79

Z400 "TYPE BL" ROUND STRAINER WITH DEX-O-TEX FLANGE 79

Z400 "TYPE C" ROUND HINGED STRAINER 80

Z400 "TYPE E" ROUND STRAINER WITH INTEGRAL FUNNEL 80

Z400 "TYPE G" ROUND STRAINER WITH DOME 81

ZXN400 "TYPE H" HEAVY-DUTY SQUARE ADJUSTABLE STRAINER 81

Z400 "TYPE I" ROUND STRAINER WITH RAISED LIP 82

Z400 "TYPE J" RECTANGULAR STRAINER WITH HEEL-PROOF SLOTTED OPENINGS 82

Z400 "TYPE K" ANGULAR STRAINER 83

Z400 "TYPE M" ROUND STRAINER WITH SLOTTED OPENINGS AND SUR-SET BUCKET 83

Z400 "TYPE N" ROUND STRAINER WITH DEEP FLANGED GRATE 84

ZN400 "TYPE R" CIRCULAR ADJUSTABLE STRAINER WITH SURFACE CLAMP RING AND GRATE 84

Z400 "TYPE S" SQUARE STRAINER 85

ZS400 "TYPE SS" SQUARE STRAINER 85

Z400 "TYPE SC" SQUARE STRAINER WITH SOLID HINGED COVER 86

Z400 "TYPE SH" SQUARE HINGED STRAINER 86

Z400-SR FLOOR DRAIN STABILIZER RING 87

Z400-U ADJUSTABLE STRAINER EXTENSION 87

Z400-18 LEVELING RING 87

Z400 "TYPE Y" SQUARE STRAINER 88

ZSS400 "TYPE Y" SQUARE STAINLESS STEEL STRAINER 88

ZXN400 "TYPE Y" HEAVY-DUTY SQUARE ADJUSTABLE STRAINER 88

Z499B ROUND PROTECTIVE COVER FOR FLOOR DRAINS 89

Z499S SQUARE PROTECTIVE COVER FOR FLOOR DRAINS 89

Z414 4" [102 MM] ROUND FUNNEL 90

Z414-1 3-1/2" X 9" [89 MM X 229 MM] OVAL FUNNEL 90

Z415-BZ1 BODY ASSEMBLY W/ "TYPE B" STRAINER AND EZ1™ TECHNOLOGY 91

Z415-SZ1 BODY ASSEMBLY W/ "TYPE S" STRAINER AND EZ1™ TECHNOLOGY 92

Z415-BZ1-DP BODY ASSEMBLY W/ "TYPE B" STRAINER, DECK PLATE AND EZ1™ TECHNOLOGY 93

Z415-SZ1-DP BODY ASSEMBLY W/ "TYPE S" STRAINER, DECK PLATE AND EZ1™ TECHNOLOGY 94

Z415B-DP BODY ASSEMBLY W/ "TYPE B" STRAINER AND DECK PLATE 95

Z415S-DP BODY ASSEMBLY W/ "TYPE S" STRAINER AND DECK PLATE **96**
Z415 FLOOR DRAIN BODY WITH CLAMPING COLLAR **97**
ZX415-A FLOOR DRAIN WITH HEAVY-DUTY ROUND STRAINER **98**
ZXN415-A FLOOR DRAIN WITH HEAVY-DUTY ROUND STRAINER **99**
ZN415-B FLOOR AND SHOWER DRAIN WITH ROUND STRAINER **100**
ZN415-BE FUNNEL FLOOR DRAIN **101**
ZN415-BF OVAL FUNNEL FLOOR DRAIN **102**
ZS415 BODY ASSEMBLY WITH "TYPE BS" STRAINER **103**
Z415 BODY ASSEMBLY WITH "TYPE BL" STRAINER **104**
Z415 BODY ASSEMBLY WITH "TYPE C" STRAINER **105**
Z415 BODY ASSEMBLY WITH "TYPE E" STRAINER **106**
Z415 BODY ASSEMBLY WITH "TYPE G" STRAINER **107**
ZXN415-H FLOOR DRAIN WITH HEAVY-DUTY SQUARE GRATE **108**
Z415 BODY ASSEMBLY WITH "TYPE H" STRAINER **109**
Z415 BODY ASSEMBLY WITH "TYPE I" STRAINER **110**
Z415 BODY ASSEMBLY WITH "TYPE J" HEEL-PROOF STRAINER **111**
Z415 BODY ASSEMBLY WITH "TYPE K" STRAINER **112**
Z415 BODY ASSEMBLY WITH "TYPE M" STRAINER AND SUR-SET BUCKET **113**
Z415 BODY ASSEMBLY WITH "TYPE N" STRAINER **114**
ZN415-R FLOOR DRAIN WITH CIRCULAR ADJUSTABLE STRAINER WITH SURFACE CLAMP RING AND GRATE **115**
Z415 BODY ASSEMBLY WITH "TYPE S" STRAINER **116**
ZS415 BODY ASSEMBLY WITH "TYPE SS" STRAINER **117**
Z415 BODY ASSEMBLY WITH "TYPE SC" STRAINER **118**
Z415 BODY ASSEMBLY WITH "TYPE SH" STRAINER **119**
Z415-U BODY ASSEMBLY WITH "TYPE U" HUB FUNNEL **120**
ZN415-Y FLOOR DRAIN WITH NICKEL BRONZE SQUARE STRAINER **121**
ZX(N)415-Y8 FLOOR DRAIN WITH HEAVY-DUTY SQUARE ADJUSTABLE CAST IRON STRAINER **122**
Z420 DEEP SHANK FLOOR AND SHOWER DRAIN FOR MARBLE AND GRANITE APPLICATIONS **123**
Z450 DRUM TRAP DRAIN WITH "TYPE B" STRAINER **124**
Z451 SHALLOW TRAP DRAIN WITH "TYPE B" STRAINER **125**
Z453 DEEP SEAL TRAP DRAIN WITH "TYPE B" STRAINER **126**
Z455 TRAP DRAIN WITH FLOOR CLEANOUT WITH "TYPE B" STRAINER **127**
Z456 DEEP SEAL TRAP DRAIN WITH FLOOR CLEANOUT AND CLAMP COLLAR WITH "TYPE B" STRAINER **128**
Z460B SHALLOW BODY FLOOR DRAIN WITH SIDE OUTLET AND "TYPE B" STRAINER **129**
Z461 6" [152 MM] SQUARE MODULAR NON-ADJUSTABLE FLOOR DRAIN WITH CLAMPING FRAME **130**
Z503 15-3/8" [391 MM] HEAVY-DUTY AREA DRAIN **130**
Z505 12-1/4" [311 MM] HEAVY-DUTY DRAIN **131**
Z507 7" [178 MM] MEDIUM-DUTY DRAIN **132**
Z508 9" [229 MM] EXTRA-HEAVY-DUTY DRAIN **133**
Z509 12-1/4" [311 MM] HEAVY-DUTY DRAIN **134**
Z511 9" [229 MM] HEAVY-DUTY DRAIN **135**
Z512 12-1/4" [311 MM] HEAVY-DUTY DRAIN **136**
Z513 9" [229 MM] SQUARE HINGED HEAVY-DUTY DRAIN **137**
Z520 9-1/4" [235 MM] ADJUSTABLE HEAVY-DUTY DRAIN **138**
Z521 12-1/4" [311 MM] DIAMETER ADJUSTABLE HEAVY-DUTY DRAIN **139**
Z526 12-1/4" [311 MM] ADJUSTABLE HEAVY-DUTY DRAIN **140**
Z530 9" [229 MM] MEDIUM-DUTY WIDE FLANGE DECK DRAIN **141**
Z531 9" [229 MM] ADJUSTABLE FRAME WIDE FLANGE MEDIUM-DUTY DECK DRAIN **141**
Z532 12-1/4" [311 MM] DIAMETER WIDE FLANGE HEAVY-DUTY FLOOR DRAIN **142**
Z533 9" [229 MM] DIAMETER HEAVY-DUTY PARKING DECK DRAIN WITH SUPPORT FLANGE **142**
Z534 12-1/4" [311 MM] DIAMETER HEAVY-DUTY PARKING DECK DRAIN WITH SUPPORT FLANGE **143**
Z535 HEAVY-DUTY PARKING STRUCTURE DRAIN **143**
Z536-8 8" [203 MM] DIAMETER HEAVY-DUTY ADJUSTABLE FLOOR DRAIN **144**
Z536 15-3/8" [391 MM] DIAMETER HEAVY-DUTY PARKING DECK DRAIN WITH SUPPORT FLANGE **144**
Z537 15-7/8" [403 MM] SQUARE TOP HEAVY-DUTY PARKING DECK DRAIN WITH SUPPORT FLANGE **145**
Z539 12-1/4" [311 MM] HEAVY-DUTY DRAIN WITH DEEP SUMP **145**
Z540 12-1/4" [311 MM] MEDIUM-DUTY DRAIN WITH SUR-SET BUCKET **146**
Z541 12-1/4" [311 MM] DIAMETER HEAVY-DUTY DRAIN **147**
Z545 16" [152 MM] DIAMETER HEAVY-DUTY DRAIN **148**
Z546 21-1/2" [546 MM] DIAMETER EXTRA HEAVY-DUTY DRAIN **149**
Z547 21" [533 MM] DIAMETER EXTRA HEAVY-DUTY HEEL-PROOF PARKING DECK DRAIN WITH SUPPORT FLANGE **149**
Z550 9" [229 MM] DIAMETER MEDIUM-DUTY DRAIN **150**
Z551 9" [229 MM] DIAMETER MEDIUM-DUTY DRAIN **151**
Z554 9" [229 MM] MEDIUM-DUTY DRAIN WITH SUR-SET BUCKET **151**
Z555 8" [203 MM] HEAVY-DUTY FLOOR DRAIN WITH DEEP ANTI-TILT GRATE **152**
Z556 8" [203 MM] ADJUSTABLE HEAVY-DUTY DRAIN **153**
Z566 12" [305 MM] SQUARE OPEN TOP DRAIN **154**
Z575 6" X 12" [152 MM X 305 MM] MEDIUM-DUTY GUTTER DRAIN **154**
Z609 9" [229 MM] SQUARE HEAVY-DUTY DRAIN **155**
Z610 12-1/2" [318 MM] HEAVY-DUTY DRAIN **156**
Z610-ADJ 12" [305 MM] SQUARE HEAVY-DUTY ADJUSTABLE DRAIN **157**
Z611 9" [229 MM] MEDIUM-DUTY DRAIN **158**
Z624 ISOLATION DECK DRAIN **159**
Z625 ADJUSTABLE ISOLATION DECK DRAIN **159**
Z627 HEAVY-DUTY ADJUSTABLE ISOLATION DECK DRAIN **160**
Z629 VERTICAL WALL DRAIN WITH BACKWATER VALVE **161**
Z645 12" X 12" [305 MM X 305 MM] EXTRA-HEAVY-DUTY DRAIN **161**
Z662 16" [152 MM] HEAVY-DUTY DRAIN **162**

Z662-HF 16" [152 MM] HEAVY-DUTY DRAIN WITH HIGH FLOW DUCTILE IRON GRATE **163**
Z664 6" [152 MM] WIDE HEAVY-DUTY MODULAR TRENCH DRAIN **164**
Z665 12" [305 MM] WIDE HEAVY-DUTY MODULAR TRENCH DRAIN **165**
Z667 6" [152 MM] WIDE MEDIUM-DUTY MODULAR TRENCH DRAIN **166**
Z668 11-1/4" X 19-1/4" [279 MM X 483 MM] HEAVY-DUTY DRAIN **166**
Z673 29" X 30" [737 MM X 762 MM] EXTRA HEAVY-DUTY DRAIN **167**
Z675 13-1/2" [343 MM] EXTRA HEAVY-DUTY DRAIN **167**
Z676 13-1/2" [343 MM] EXTRA HEAVY-DUTY DRAIN **168**
Z730 9" [229 MM] TOP MEDIUM-DUTY DRAIN **168**
Z742 LIGHT-DUTY TRAP DRAIN **169**
ZF799 HEAVY-DUTY CATCH BASIN DRAIN **170**
VP-DRIVER VANDAL-PROOF DRIVER **170**

FLOOR DRAINS - GENERAL INFORMATION

Zurn floor drains are generally made up of a body, combination frame/clamp collar and top grate. The assemblies shown below illustrate the more common components utilized in floor drains.

Zurn floor drains are available in 2" through 10" outlet sizes (and 12" for specific drains and outlet type) with Inside Caulk, Threaded, No-Hub and Neo-Loc connections.

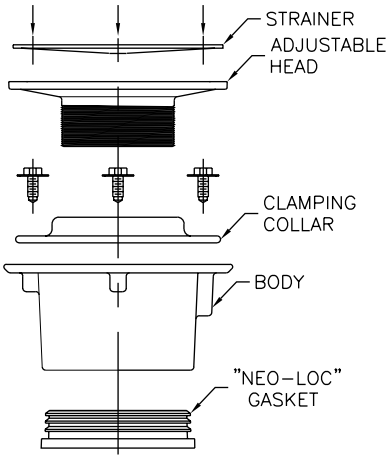

Z415 "Type B" Illustrated

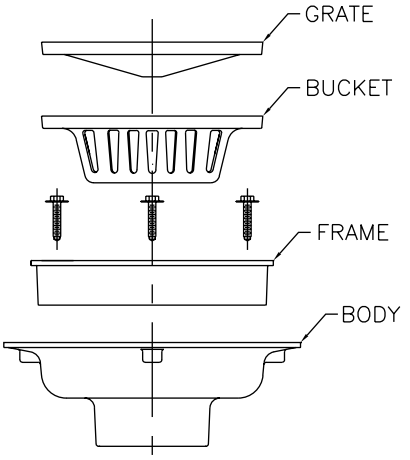

Z541 Illustrated

FLOOR DRAINS - APPLICATION INDEX

The Zurn floor drains below are recommended for the applications listed. Most Zurn floor drains can be readily adapted for use in finished areas by using bronze or nickel bronze grates and strainers. (Use Prefix "ZB" or "ZN" preceding the product number in place of the usual "Z" Prefix.)

APPLICATION	RECOMMENDED FLOOR DRAIN
Automobile Parking Area	Z533, Z534, Z535, Z536, Z537, Z541, Z546, Z547, Z662, Z662-HF
Basement and Subterranean Areas	Z566, Z730
Boiler House and Maintenance Areas	Z541-90, Z546, Z645, Z761
Clinical, Surgical, Detention Areas	Z300, Z310, Z315, Z319, Z461
Entrances and Concourses	Z664, Z665, Z667
Finished Area/Gutter	Z460B, Z575
Finished Interior Floor Areas Adjustable	Z415-BZ1, Z415-SZ1, Z415-BZ1-DP, Z415-SZ1-DP, Z415B-DP, Z415S-DP, ZN415, ZS415, ZN450, Z451B, ZN453, ZN455, ZN456, Z460B, Z461
Finished Interior Floor Areas Adjustable with EZ1™ Technology (Post Pour Adjustment)	Z415-BZ1, Z415-SZ1, Z415-BZ1-DP, Z415-SZ1-DP
Food Preparation Areas	Z320, ZN610-SS (Also See Sani-Flor Receptors - Z1900 Series)
Garage, Hangar and Service Areas	Z546, Z664, Z665, Z667, Z673, Z675, Z676
Indirect Waste Area (Condensate and Drip)	Z325, Z326, Z328, Z329, Z566
Industrial Areas – Vertical Adjustment	Z520, Z521, Z526
Medium Duty	Z550, Z551, Z609, Z611, Z667, Z730
Heavy Duty	Z508, Z509, Z511, Z512, Z520, Z521, Z532, Z539, Z541, Z545, Z575
Extra Heavy Duty	Z546, Z503, Z512, Z541, Z610, Z645, Z662, Z664, Z668, Z673, Z675, Z676
Traps and Backwater Valves	Z730, Z761
Planting Area	Z349, Z350
Prison Cell (Multi-Purpose)	Z355
Roadways	Z546, Z610, Z668, Z673

CAST IRON EZ1™ NOMENCLATURE DECODER

SHIM KIT

Shims built into the rough-in cover for tilt adjustment, screws included.

ROUGH-IN COVER

Designed to stand up to rigorous jobsites with 3,000 lb load rating.

PROTECTIVE LABEL

Keeps grate/cover finish intact until the job is complete.

COVER OPTIONS

BZ1 = Round with Post-Pour Adjustability
SZ1- Square with Post-Pour Adjustability
ZN = Polished Nickel Bronze Top*
ZB = Polished Bronze Top
ZS = Polished Stainless Steel Top

BODY OPTIONS

IC = Inside Caulk
IG = Inside Gasket
IP = Threaded
NH = No-Hub
NL = Neo-Loc

OUTLET SIZES

Available in outlet sizes ranging from 2" through 6"

A Whole Family of Product

-BZ1 = Round cast iron floor drain or cleanout
-SZ1 = Square cast iron floor drain or cleanout
-DP = Stainless steel deck plate for a cast iron floor drain or cleanout

Model Number Example

[ZN][415]-[3][NH]-[5][S][Z1]-[DP]

ZN = Denotes cover material
415 or **1400** = Denotes floor drain or cleanout
3 = Denotes outlet size
NH = Denotes outlet type
5, **6**, or **8** = Denotes cover size
S = Denotes round or square
Z1 = Denotes post-pour adjustability
DP = Denotes deck plate

**Comes standard with nickel bronze unless otherwise noted.*

Learn more at ***zurn.ca/ez1***

Z211 FLOOR DRAIN BODY ONLY

ENGINEERING SPECIFICATION

Zurn Z211 Floor and Shower Drain, Dura-Coated cast iron body with bottom outlet.

Dimensions in inches [mm]		Approximate Weight lb [kg]
A Pipe Size	Body Height	
2 - 3 - 4 [51-76-102]	3-3/4 [95]	4 [2]

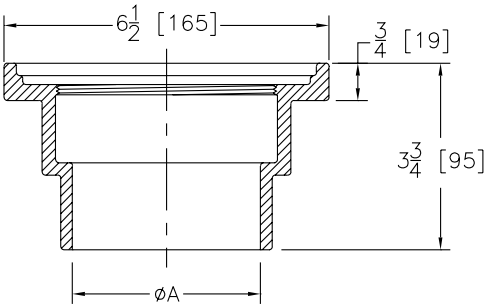

PREFIXES	DESCRIPTION	STRAINER DESIGNATION	LIST PRICE
Z211	Dura-Coated Cast Iron Body	No Strainer	73.00
OUTLETS (SPECIFY PIPE SIZE IN INCHES AND TYPE OF OUTLET)			
OUTLET TYPE		PIPE SIZE/OUTLET TYPE	ADD
NH	No-Hub	2NH, 3NH, 4NH	N/C
SUFFIXES			ADD
–GB	Galvanized Cast Iron Body Only		130.00
–P	1/2" [13 mm] Trap Primer Connection		22.00

Z211-A FLOOR DRAIN WITH ROUND STRAINER

ENGINEERING SPECIFICATION

Zurn ZXN211-A Floor and Shower Drain, Dura-Coated cast iron body with bottom outlet, adjustable "Type A" heavy-duty polished nickel bronze round strainer.

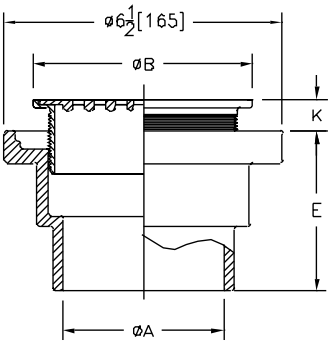

PREFIXES	DESCRIPTION	STRAINER DESIGNATION	LIST PRICE
ZX211-A	Dura-Coated Cast Iron Body with heavy-duty cast iron round strainer	–5A	204.00
ZXN211-A	Dura-Coated Cast Iron Body with heavy-duty polished nickel bronze round strainer	–5A	344.00
		–6A	453.00
OUTLETS (SPECIFY PIPE SIZE IN INCHES AND TYPE OF OUTLET)			
OUTLET TYPE		PIPE SIZE/OUTLET TYPE	ADD
NH	No-Hub	2NH, 3NH, 4NH	N/C
SUFFIXES			ADD
–G	Galvanized Cast Iron Complete (ZX211 Only)		173.00
–GB	Galvanized Cast Iron Body Only		130.00
–P	1/2" [13 mm] Trap Primer Connection		22.00
–VP	Vandal-Proof Secured Top		41.00
–X	Squeezin Backwater Valve		90.00
–Y	Sediment Bucket		53.00

Strainer Designation	A Pipe Size	Size B Strainer Dia.	K		Open Area sq in [cm²]	Approximate Weight lb [kg]
			Min.	Max.		
-5A	2 - 3 - 4 [51-76-102]	5 [127]	1/4 [6]	1-1/4 [32]	7 [45]	8 [4]
-6A	2 - 3 - 4 [51-76-102]	6 [152]	3/4 [19]	1-5/8 [41]	11 [71]	9 [4]

For additional product information, please visit www.zurn.ca

**Regularly furnished unless otherwise specified.*

This symbol denotes a product that is engineered to reduce installation and rework time.

ZN211-B FLOOR AND SHOWER DRAIN WITH ROUND NICKEL BRONZE STRAINER

ENGINEERING SPECIFICATION

Zurn ZN211-B Floor and Shower Drain features a Dura-Coated cast iron body with bottom outlet, adjustable "Type B" polished nickel bronze round strainer.

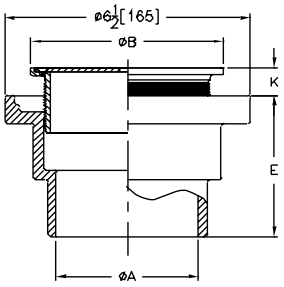

PREFIXES	DESCRIPTION	STRAINER DESIGNATION	LIST PRICE
ZN211-B*	Dura-coated cast iron body with polished nickel bronze round strainer with slotted grate	–5B	257.00
		–6B	354.00
	Dura-coated cast iron body with polished nickel bronze round strainer with square hole grate	–7B	489.00
		–8B	692.00
OUTLETS (SPECIFY PIPE SIZE IN INCHES AND TYPE OF OUTLET)			
OUTLET TYPE		**PIPE SIZE/OUTLET TYPE**	**ADD**
NH	No-Hub	2NH, 3NH, 4NH	N/C
SUFFIXES			**ADD**
–GB	Galvanized Cast Iron Body Only		130.00
–P	1/2" [13 mm] Trap Primer Connection		22.00
–VP	Vandal-Proof Secured Top		41.00
–X	Squeezin Backwater Valve		90.00
–Y	Sediment Bucket		53.00
–210	8" [203 mm] Wide Flange Body (Formerly Z210)		39.00
–210-WD	8" [203 mm] Wood Deck Drain (Note: Add to price of ZN211-5B only)		374.00

Strainer Designation	Dimensions in inches [mm]				Open Area sq in [cm²]	Approximate Weight lb [kg]
	A Pipe Size	Size B Strainer Dia.	K			
			Min.	Max.		
-5B	2 - 3 - 4 [51-76-102]	5 [127]	1/4 [6]	1-1/4 [32]	8 [52]	7 [3]
-6B	2 - 3 - 4 [51-76-102]	6 [152]	1/4 [6]	1-1/4 [32]	9 [58]	7 [3]
-7B (square hole grate)	2 - 3 - 4 [51-76-102]	7 [178]	1/4 [6]	1-1/4 [32]	12 [77]	8 [4]
-8B (square hole grate)	2 - 3 - 4 [51-76-102]	8 [203]	1/4 [6]	1-1/4 [32]	18 [116]	9 [4]

ZN211-BE ROUND FUNNEL NICKEL BRONZE FLOOR DRAIN

ENGINEERING SPECIFICATION

Zurn ZN211-BE Funnel Floor Drain features a Dura-Coated cast iron body with bottom outlet, adjustable "Type BE" polished nickel bronze round strainer with 4" [102 mm] round funnel.

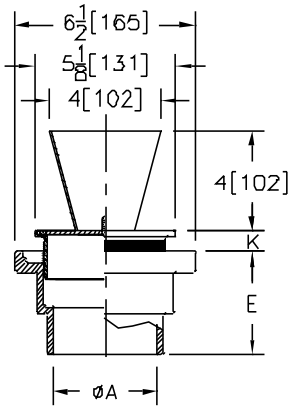

PREFIXES	DESCRIPTION	STRAINER DESIGNATION	LIST PRICE
ZN211-BE*	Dura-Coated Cast Iron Body with polished nickel bronze round strainer with 4" [102 mm] round funnel	–5BE	495.00
OUTLETS (SPECIFY PIPE SIZE IN INCHES AND TYPE OF OUTLET)			
OUTLET TYPE		**PIPE SIZE/OUTLET TYPE**	**ADD**
NH	No-Hub	2NH, 3NH, 4NH	N/C
SUFFIXES			**ADD**
–GB	Galvanized Cast Iron Body Only		130.00
–P	1/2" [13 mm] Trap Primer Connection		22.00
–VP	Vandal-Proof Secured Top		41.00
–X	Squeezin Backwater Valve		90.00
–Y	Sediment Bucket		53.00

Strainer Designation	Dimensions in inches [mm]				Open Area sq in [cm²]	Approximate Weight lb [kg]
	A Pipe Size	Funnel Diameter	K			
			Min.	Max.		
-5BE	2 - 3 - 4 [51-76-102]	4 [102]	1/4 [6]	1-1/4 [32]	5 [32]	8 [4]

*Regularly furnished unless otherwise specified.

This symbol denotes a product that is engineered to reduce installation and rework time.

For additional product information, please visit www.zurn.ca

ZN211-BF OVAL OPEN THROAT FUNNEL NICKEL BRONZE FLOOR DRAIN

ENGINEERING SPECIFICATION

Zurn ZN211-BF Funnel Floor Drain features a Dura-Coated cast iron body with bottom outlet, adjustable "Type BF" polished nickel bronze round strainer with secured open throat oval funnel.

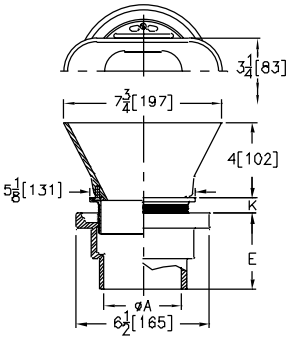

PREFIXES	DESCRIPTION	STRAINER DESIGNATION	LIST PRICE
ZN211-BF*	Dura-Coated Cast Iron Body with polished nickel bronze round strainer with secured open throat oval funnel	–5BF	599.00
Z211-BF	Dura-Coated Cast Iron Body with round strainer with secured open throat oval funnel	–5BF	337.00
OUTLETS (SPECIFY PIPE SIZE IN INCHES AND TYPE OF OUTLET)			
OUTLET TYPE		**PIPE SIZE/OUTLET TYPE**	**ADD**
NH	No-Hub	2NH, 3NH, 4NH	N/C
SUFFIXES			**ADD**
–G	Galvanized Cast Iron Complete		173.00
–GB	Galvanized Cast Iron Body Only		130.00
–P	1/2" [13 mm] Trap Primer Connection		22.00
–VP	Vandal-Proof Secured Top		41.00
–X	Squeezin Backwater Valve		90.00
–Y	Sediment Bucket		53.00

Strainer Designation	Dimensions in inches [mm]				Open Area sq in [cm²]	Approximate Weight lb [kg]
	A Pipe Size	Funnel Size	K			
			Min.	Max.		
-BF	2 - 3 - 4 [51-76-102]	3-1/4 x 8 [83 x 203]	1/4 [6]	1-1/4 [32]	3 [19]	9 [4]

ZXN211-H FLOOR DRAIN WITH HEAVY DUTY SQUARE STRAINER

ENGINEERING SPECIFICATION

Zurn ZXN211-H Floor and Shower Drain features a Dura-Coated cast iron body with bottom outlet, adjustable "Type H" heavy-duty polished nickel bronze square strainer.

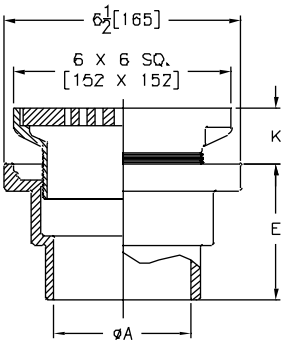

PREFIXES	DESCRIPTION	STRAINER DESIGNATION	LIST PRICE
ZXN211-H*	Dura-Coated Cast Iron Body with heavy-duty polished nickel bronze square strainer	–6H	508.00
OUTLETS (SPECIFY PIPE SIZE IN INCHES AND TYPE OF OUTLET)			
OUTLET TYPE		**PIPE SIZE/OUTLET TYPE**	**ADD**
NH	No-Hub	2NH, 3NH, 4NH	N/C
SUFFIXES			**ADD**
–GB	Galvanized Cast Iron Body Only		130.00
–P	1/2" [13 mm] Trap Primer Connection		22.00
–VP	Vandal-Proof Secured Top		41.00
–X	Squeezin Backwater Valve		90.00
–Y	Sediment Bucket		53.00

Strainer Designation	Dimensions in inches [mm]				Open Area sq in [cm²]	Approximate Weight lb [kg]
	A Pipe Size	Funnel Size	K			
			Min.	Max		
-H6	2 - 3 - 4 [51-76-102]	6 x 6 [152 x 152]	3/4 [19]	1-5/8 [41]	12 [77]	10 [5]

ZN211-Y FLOOR AND SHOWER DRAIN WITH SQUARE NICKEL BRONZE STRAINER

ENGINEERING SPECIFICATION

Zurn ZN211-Y Floor and Shower Drain features a Dura-Coated cast iron body with bottom outlet, adjustable "Type Y" square strainer.

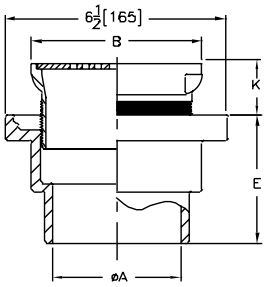

PREFIXES	DESCRIPTION	STRAINER DESIGNATION	LIST PRICE
ZN211-Y*	Dura-Coated Cast Iron Body with polished nickel bronze square strainer	–5Y	461.00
		–6Y	508.00
OUTLETS (SPECIFY PIPE SIZE IN INCHES AND TYPE OF OUTLET)			
OUTLET TYPE		**PIPE SIZE/OUTLET TYPE**	**ADD**
NH	No-Hub	2NH, 3NH, 4NH	N/C
SUFFIXES			**ADD**
–GB	Galvanized Cast Iron Body Only		130.00
–P	1/2" [13 mm] Trap Primer Connection		22.00
–VP	Vandal-Proof Secured Top		41.00
–X	Squeezin Backwater Valve		90.00
–Y	Sediment Bucket		53.00

Strainer Designation	Dimensions in inches [mm]				Open Area sq in [cm²]	Approximate Weight lb [kg]
	A Pipe Size	B Strainer Size	K			
			Min.	Max.		
-5Y	2 - 3 - 4 [51-76-102]	5 x 5 [127 x 127]	1 [25]	2 [51]	9 [58]	8 [4]
-6Y	2 - 3 - 4 [51-76-102]	6 x 6 [152 x 152]	1 [25]	2 [51]	12 [77]	10 [5]

ZX211-Y FLOOR DRAIN WITH SQUARE HEAVY-DUTY CAST IRON STRAINER

ENGINEERING SPECIFICATION

Zurn ZX211-Y Floor and Shower Drain features a Dura-Coated cast iron body with bottom outlet, adjustable "Type Y" heavy-duty square strainer.

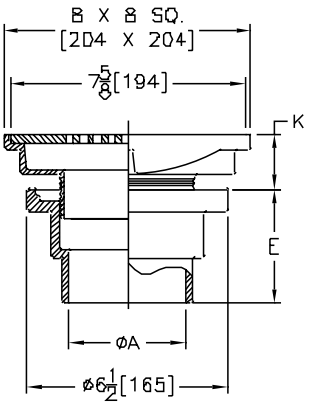

PREFIXES	DESCRIPTION	STRAINER DESIGNATION	LIST PRICE
ZX211-Y*	Dura-Coated Cast Iron Body with heavy-duty square strainer	–8Y	355.00
ZXN211-Y*	Dura-Coated Cast Iron Body with heavy-duty square strainer	–8Y	809.00
OUTLETS (SPECIFY PIPE SIZE IN INCHES AND TYPE OF OUTLET)			
OUTLET TYPE		**PIPE SIZE/OUTLET TYPE**	**ADD**
NH	No-Hub	2NH, 3NH, 4NH	N/C
SUFFIXES			**ADD**
–G	Galvanized Complete		183.00
–GB	Galvanized Cast Iron Body Only		130.00
–P	1/2" [13 mm] Trap Primer Connection		22.00
–VP	Vandal-Proof Secured Top		41.00
–X	Squeezin Backwater Valve		90.00
–Y	Sediment Bucket		53.00
–210	8" [203 mm] Wide Flange Body (Formerly Z210)		39.00

Strainer Designation	Dimensions in inches [mm]				Open Area sq in [cm²]	Approximate Weight lb [kg]
	A Pipe Size	B Strainer Size	K			
			Min.	Max.		
-8Y	2 - 3 - 4 [51-76-102]	8 x 8 [203 x 203]	1 [25]	2 [51]	26 [168]	15 [7]

**Regularly furnished unless otherwise specified.*

This symbol denotes a product that is engineered to reduce installation and rework time.

For additional product information, please visit www.zurn.ca

Z300 THOROFLUSH DRAIN

ENGINEERING SPECIFICATION

Zurn ZN300 11" [279 mm] top thoroflush drain with integral double wall trap features cast iron body with white acid resistant epoxy coated exterior and interior, side outlet with seepage pan, nickel bronze flushing rim top, and slotted hinged grate.

Dimensions in inches [mm]		Grate Open Area sq in [cm²]	Approximate Weight lb [kg]
A Pipe Size	M		
2 [51]	3 [76]	18 [116]	50 [23]
3 [76]	2-1/2 [64]		
4 [102]	3 [76]		

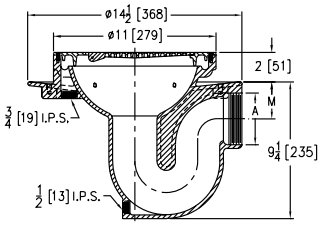

2" and 3" Pipe Sizes

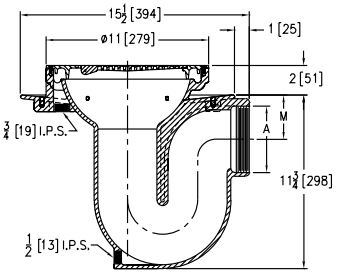

4" Pipe Size

PREFIXES	DESCRIPTION	A PIPE SIZE	LIST PRICE
ZN300*	Cast Iron Body with A.R.C. Interior and Exterior with Polished Nickel Bronze Top	2"	4,373.00
		3", 4"	4,504.00
ZB300	Cast Iron Body with A.R.C. Interior and Exterior with Polished Bronze Top	2"	4,155.00
		3", 4"	4,281.00
OUTLETS (SPECIFY PIPE SIZE IN INCHES AND TYPE OF OUTLET)			
OUTLET	**TYPE**	**PIPE SIZE/OUTLET TYPE**	**ADD**
IP	Threaded	2IP, 3IP, 4IP	N/C
SUFFIXES			**ADD**
–C	Clamping Collar		266.00
–FG	Free Set Grate		260.00
–IG	Integral Grate		277.00
–SC	Solid Cover		521.00
–ST	Solid Hinged Top		531.00
–VP	Vandal-Proof Screws in Frame		38.00
–WB	Water Supply Control Box (See Z1464)		3,203.00

Z310 THOROFLUSH DRAIN

ENGINEERING SPECIFICATION

Zurn ZN310 11" [279 mm] top thoroflush drain features cast iron body with white acid resistant epoxy coated exterior and interior, bottom outlet with seepage pan, nickel bronze flushing rim top, and slotted hinged grate.

A Pipe Size inch [mm]	Grate Open Area sq in [cm²]	Approximate Weight lb [kg]
2 [51], 3 [76], 4 [102]	18 [116]	20 [9]

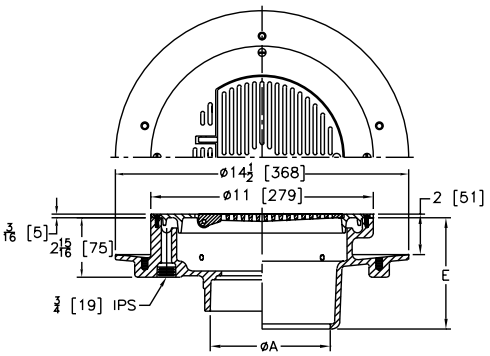

PREFIXES	DESCRIPTION	A PIPE SIZE	LIST PRICE
ZN310*	Cast Iron Body with A.R.C. Interior and Exterior with Polished Nickel Bronze Top	2", 3", 4"	3,692.00
ZB310	Cast Iron Body with A.R.C. Interior and Exterior with Polished Bronze Top	2", 3", 4"	3,516.00
OUTLETS (SPECIFY PIPE SIZE IN INCHES AND TYPE OF OUTLET)			
OUTLET	**TYPE**	**PIPE SIZE/OUTLET TYPE**	**E BODY HT. DIM.**	**ADD**
IP	Threaded	2IP, 3IP, 4IP	5-1/2"	98.00
NL	Neo-Loc	2NL, 3NL, 4NL	4-5/8"	98.00
SUFFIXES				**ADD**
–C	Clamping Collar			292.00
–FG	Free Set Grate			286.00
–IG	Integral Grate			305.00
–ST	Solid Hinged Top			586.00
–TC	Neo-Loc Test Cap Gasket (2", 3", 4" NL Bottom Outlet Only)			116.00
–VP	Vandal-Proof Screws in Frame			41.00
–WB	Water Supply Control Box (See Z1464)			3,524.00

For additional product information, please visit www.zurn.ca

**Regularly furnished unless otherwise specified.*

This symbol denotes a product that is engineered to reduce installation and rework time.

Z315 VANDAL-PROOF ACCESS DRAIN

ENGINEERING SPECIFICATION

Zurn ZN315 10″ [254 mm] top vandal-proof drain features Dura-Coated cast iron body bottom outlet, invertible membrane clamp, vertically adjustable nickel bronze top with secondary strainer, and hinged solid locking cover.

A Pipe Size inch [mm]	Approximate Weight lb [kg]
2 [51]	23 [10]
3 [76]	24 [11]
4 [102]	25 [11]

PREFIXES	DESCRIPTION	A PIPE SIZE		LIST PRICE
ZN315*	D.C.C.I Body with Polished Nickel Bronze Top	2″, 3″, 4″		2,529.00
OUTLETS (SPECIFY PIPE SIZE IN INCHES AND TYPE OF OUTLET)				
OUTLET	TYPE	PIPE SIZE/ OUTLET TYPE	E BODY HT. DIM.	ADD
NH	No-Hub	2NH, 3NH, 4NH	3-7/8″	N/C
NL	Neo-Loc	2NL, 3NL, 4NL	3-3/4″	41.00
SUFFIXES				ADD
–G	Galvanized Cast Iron			90.00
–HL	Hinged Locking Grate			35.00
–P	Trap Primer Connection			22.00
⏲ –TC	Neo-Loc Test Cap Gasket (2″, 3″, 4″ NL Bottom Outlet Only)			116.00

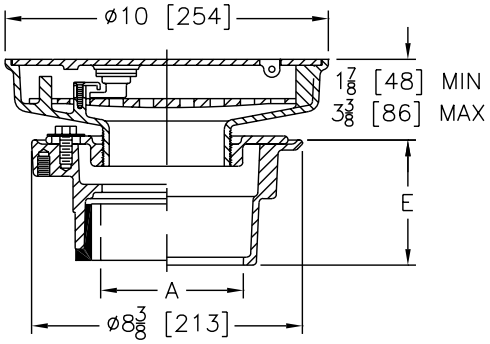

Z319 THOROFLUSH DRAIN – LARGE CAPACITY

ENGINEERING SPECIFICATION

Zurn ZN319 25″ [635 mm] large capacity thoroflush drain features cast iron body with white acid resistant coating, bottom outlet, and nickel bronze top frame and grate with flushing connection.

A Pipe Size inch [mm]	Grate Open Area sq in [cm²]	Approximate Weight lb [kg]
3 [76], 4 [102], 6 [152], 8 [203]	232 [1496]	118 [54]

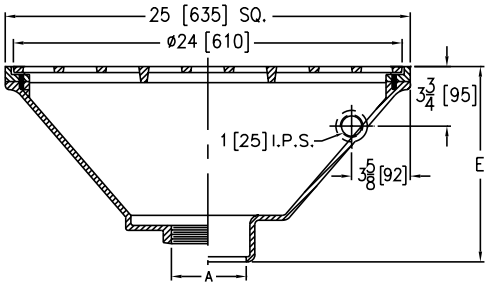

PREFIXES	DESCRIPTION	A PIPE SIZE		LIST PRICE
ZN319*	Cast Iron Body with A.R.C. Polished Nickel Bronze Top	3″, 4″, 6″, 8″		21,366.00
OUTLETS (SPECIFY PIPE SIZE IN INCHES AND TYPE OF OUTLET)				
OUTLET	TYPE	PIPE SIZE/OUTLET TYPE	E BODY HT. DIM.	ADD
IC	Inside Caulk	3IC, 4IC	12-1/8″	157.00
IG	Inside Gasket	3IG, 4IG	12-1/8″	41.00
IP	Threaded	3IP, 4IP, 6IP, 8IP	11″	98.00
SUFFIXES				ADD
–G	Galvanized Cast Iron			1,072.00
–P	Trap Primer Connection			22.00
–VP	Vandal-Proof Secured Top			116.00

*Regularly furnished unless otherwise specified.

⏲ *This symbol denotes a product that is engineered to reduce installation and rework time.*

For additional product information, please visit www.zurn.ca

Z320 REFRIGERATOR DRAIN

ENGINEERING SPECIFICATION

Zurn ZN320 9″ [229 mm] refrigerator drain features cast iron body with white acid resistant epoxy coated interior, nickel bronze flushing rim top, and recessed hinged grate.

A Pipe Size inch [mm]	Grate Open Area sq in [cm²]	Approximate Weight lb [kg]
2 [51], 3 [76], 4 [102]	7-1/2 [48]	15 [7]

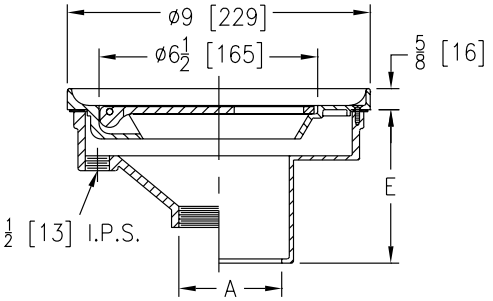

PREFIXES	DESCRIPTION	A PIPE SIZE	LIST PRICE
ZN320*	Cast Iron Body with A.R.C. Interior and Polished Nickel Bronze Top	2″, 3″, 4″	1,515.00

OUTLETS (SPECIFY PIPE SIZE IN INCHES AND TYPE OF OUTLET)				
OUTLET TYPE		PIPE SIZE/ OUTLET TYPE	E BODY HT. DIM.	ADD
IC	Inside Caulk	2IC, 3IC, 4IC	4-1/2″	N/C
IG	Inside Gasket	2IG, 3IG, 4IG	4-1/2″	41.00
IP	Threaded	2IP, 3IP, 4IP	3-7/16″	98.00

SUFFIXES		ADD
–G	Galvanized Cast Iron	90.00
–VP	Vandal-Proof Secured Top	41.00

Z325 INDIRECT WASTE FUNNEL WITH INTEGRAL BACKWATER VALVE

ENGINEERING SPECIFICATION

Zurn Z325 7″ [178 mm] or 9″ [229 mm] diameter indirect waste funnel features Dura-Coated cast iron body, plastic ball float, bronze backwater valve bushing and replaceable neoprene seat.

Dimensions in inches [mm]		Approximate Weight lb [kg]
A Pipe Size	B	
2 [51]	6-3/4 [171]	13 [6]
3 [76]		16 [7]
4 [102]	8-5/8 [219]	20 [9]
6 [152]		37 [17]

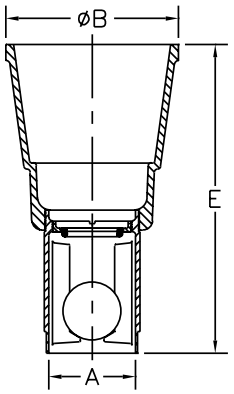

PREFIXES	DESCRIPTION	A PIPE SIZE	LIST PRICE
Z325*	D.C.C.I. Body	2″	1,025.00
		3″	1,075.00
		4″	1,140.00
		6″	1,798.00

OUTLETS (SPECIFY PIPE SIZE IN INCHES AND TYPE OF OUTLET)				
OUTLET TYPE		PIPE SIZE/OUTLET TYPE	E BODY HT. DIM.	ADD
NH	No-Hub	2NH, 3NH	12-3/4″	N/C
		4NH, 6NH	15-1/4″	N/C

SUFFIXES		ADD
–DB	Bottom Dome Strainer	41.00
–G	Galvanized Cast Iron	247.00
–S	Secondary Strainer	41.00

For additional product information, please visit www.zurn.ca

**Regularly furnished unless otherwise specified.*

This symbol denotes a product that is engineered to reduce installation and rework time.

Z326 INDIRECT WASTE FUNNEL

ENGINEERING SPECIFICATION

Zurn Z326 7″ [178 mm] or 9″ [229 mm] diameter Indirect waste funnel features Dura-Coated cast iron body and bottom outlet.

Dimensions in inch [mm]		Approximate Weight lb [kg]
A Pipe Size	B	
2 [51]	6-3/4 [171]	8 [4]
3 [76]		8 [4]
4 [102]	8-5/8 [219]	31 [14]
6 [152]		26 [12]

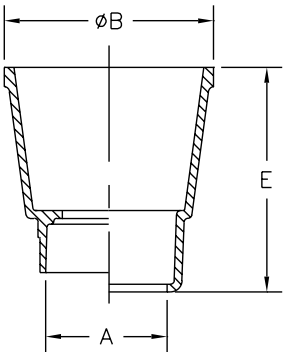

PREFIXES	DESCRIPTION	A PIPE SIZE	LIST PRICE
Z326*	D.C.C.I. Body	2″	194.00
		3″	291.00
		4″	861.00
		6″	1,001.00
ZARB326	Plain Bronze Body	2″	532.00
		3″	794.00
		4″	2,352.00
		6″	2,746.00

OUTLETS (SPECIFY PIPE SIZE IN INCHES AND TYPE OF OUTLET)				
OUTLET TYPE		PIPE SIZE/OUTLET TYPE	E BODY HT. DIM.	ADD
IP	Threaded	2IP, 3IP	7-1/4″	98.00
		4IP, 6IP	9-7/8″	98.00
NL	Neo-Loc	2NL, 3NL	6-5/8″	41.00
		4NL	9″	41.00

SUFFIXES			ADD
–AR	Acid Resisting Epoxy Coated Cast Iron		349.00
–DB	Bottom Dome Strainer	Z	91.00
		ZARB	182.00
–G	Galvanized Cast Iron		173.00

Z328 FUNNEL CONVERTING ASSEMBLY

ENGINEERING SPECIFICATION

Zurn Z328 4″ [102 mm] or 6″ [152 mm] (specify) diameter funnel converting assembly features Dura-Coated cast iron (or finish to suit drain top), along with necessary fasteners to secure funnel to strainer.

Product Designation	Dimensions in inches [mm]			Approximate Weight lb [kg]
	B	C	U	
-4	4 [102]	2-1/4 [57]	3-3/4 [95]	2 [1]
-6	6 [152]	2-7/8 [73]	6 [152]	5 [2]

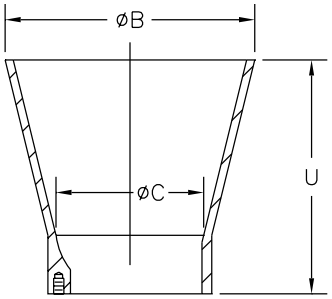

PREFIXES	DESCRIPTION	PRODUCT DESIGNATION	LIST PRICE
Z328*	D.C.C.I. Funnel	-4	187.00
		-6	198.00
ZN328	Polished Nickel Bronze Funnel	-4	242.00
		-6	660.00

SUFFIXES		ADD
–AR	Acid Resisting Epoxy Coated Cast Iron	349.00

**Regularly furnished unless otherwise specified.*

This symbol denotes a product that is engineered to reduce installation and rework time.

For additional product information, please visit www.zurn.ca

Z329 FUNNEL CONVERTING ASSEMBLY

ENGINEERING SPECIFICATION

Zurn Z329 7" [178 mm] or 9" [229 mm] (specify) oval funnel converting assembly features Dura-Coated cast iron (or finish to suit drain top), along with necessary fasteners to secure funnel to strainer. (Available on 7" [178 mm] diameter or larger size drain tops only.)

PREFIXES	DESCRIPTION	PRODUCT DESIGNATION	LIST PRICE
Z329*	D.C.C.I. Funnel	-7	28.00
		-9	110.00
ZN329	Polished Nickel Bronze Funnel	-7	231.00
		-9	886.00
SUFFIXES			**ADD**
–AR	Acid Resisting Epoxy Coated Cast Iron		349.00

Product Designation	Dimensions in inches [mm]			Approximate Weight lb [kg]
	L	L'	U	
-7	6-3/4 [171]	3 [76]	1 [25]	2 [1]
-9	8-7/8 [225]	3-5/8 [92]	3-3/4 [95]	4 [2]

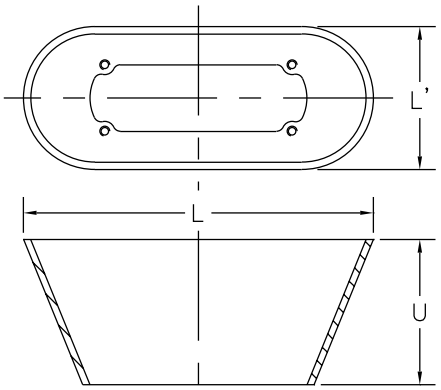

Z349 TERRACE PLANTING AREA DRAIN

ENGINEERING SPECIFICATION

Zurn Z349 terrace planting area drain features Dura-Coated cast iron body, 8″ [203 mm] high perforated overflow standpipe with dome, and combination membrane flashing clamp/gravel guard.

A Pipe Size inch [mm]	Approximate Weight lb [kg]
2 [51], 3 [76], 4 [102]	40 [18]
5 [127], 6 [152]	42 [19]

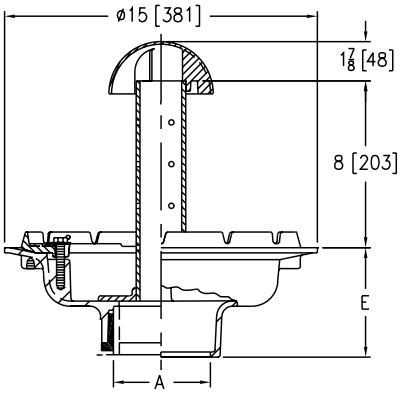

PREFIXES	DESCRIPTION	A PIPE SIZE	LIST PRICE
Z349*	D.C.C.I. Body with Standpipe and Dome	2″, 3″, 4″	866.00
		6″	1,052.00
ZN349	D.C.C.I. Body, Clamp with Polished Nickel Bronze Standpipe and Dome	2″, 3″, 4″	1,624.00
		6″	1,986.00

OUTLETS (SPECIFY PIPE SIZE IN INCHES AND TYPE OF OUTLET)				
OUTLET	TYPE	PIPE SIZE/OUTLET TYPE	E BODY HT. DIM.	ADD
NH	No-Hub	2NH, 3NH, 4NH, 6NH	5-1/4″	N/C
NL	Neo-Loc	2NL, 3NL, 4NL	4-9/16″	41.00
		6NL	5-7/16″	41.00

SUFFIXES			ADD
– C	Underdeck Clamp		173.00
– G	Galvanized Cast Iron		300.00
⏲ –SA	Stabilizer Assembly (See Z1036)		N/C
–SD	Longer Standpipe For Each Additional 1″ over 8″ (Specify Height)	Z	151.00
		ZN	237.00
– SS	Stainless Steel Mesh Screen over Standpipe		POA

Z350 PLANTING AREA DRAIN

ENGINEERING SPECIFICATION

Zurn Z350 planting area drain features Dura-Coated cast iron body with bottom outlet and combination invertible membrane clamp, vertically adjustable nickel bronze head, floor flange, and 2″ [51 mm] diameter perforated standpipe and dome.

A Pipe Size inches [mm]	Approximate Weight lb [kg]
2 [51], 3 [76], 4 [102]	22 [10]

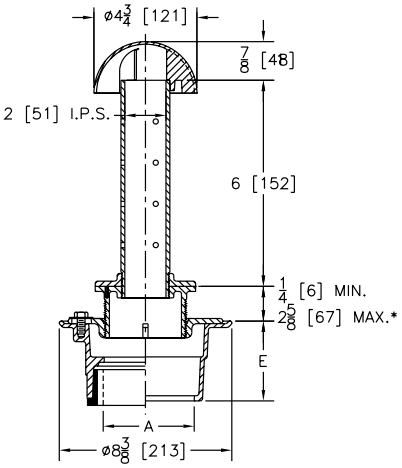

PREFIXES	DESCRIPTION	A PIPE SIZE	LIST PRICE
ZN350*	D.C.C.I. Body with Polished Stainless Steel Standpipe	2″, 3″, 4″	1,479.00
ZB350	D.C.C.I. Body with Polished Brass Standpipe	2″, 3″, 4″	1,437.00

OUTLETS (SPECIFY PIPE SIZE IN INCHES AND TYPE OF OUTLET)				
OUTLET	TYPE	PIPE SIZE/OUTLET TYPE	E BODY HT. DIM.	ADD
IC	Inside Caulk	2IC, 3IC, 4IC	4-3/16″	N/C
IG	Inside Gasket	2IG, 3IG, 4IG	4-3/16″	41.00
IP	Threaded	2IP	2-7/16″	98.00
		3IP	2-3/4″	98.00
		4IP	2-3/16″	98.00
NH	No-Hub	2NH, 3NH, 4NH	3-13/16″	N/C
NL	Neo-Loc	2NL, 3NL, 4NL	3-7/8″	41.00

SUFFIXES			ADD
–C	Underdeck Clamp		N/C
–G	Galvanized Cast Iron		173.00
–P	Trap Primer Connection (Specify 1/2″ or 3/4″)		22.00
–SD	Longer Standpipe For Each Additional 1″ over 6″ (Specify Height)	ZB, ZN	157.00
–SS	Stainless Steel Mesh Screen over Dome		POA
DEDUCT			
-PS	Solid Standpipe		N/C

**Regularly furnished unless otherwise specified.*

⏲ *This symbol denotes a product that is engineered to reduce installation and rework time.*

For additional product information, please visit www.zurn.ca

Z355 PRISON CELL FLOOR DRAIN

ENGINEERING SPECIFICATION

Zurn ZN355 prison cell floor drain features Dura-Coated cast iron body with side outlet, integral trap, anchor flange, and adjustable nickel bronze slotted strainer secured with spanner type vandal-proof screws.

A Pipe Size inches [mm]	Grate Open Area sq in [cm²]	Approximate Weight lb [kg]
2 [51]	3-1/2 [23]	13 [6]
3 [76]		15 [7]

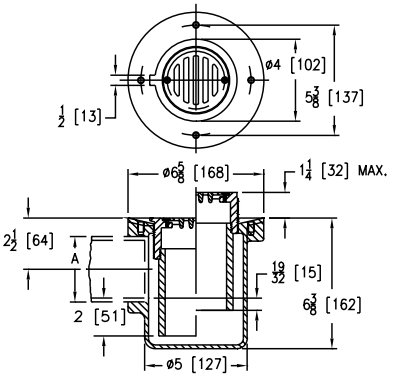

PREFIXES	DESCRIPTION	A PIPE SIZE	LIST PRICE
ZN355*	D.C.C.I. Body with Polished Nickel Bronze Top	2″	1,005.00
		3″	1,117.00
OUTLETS (SPECIFY PIPE SIZE IN INCHES AND TYPE OF OUTLET)			
OUTLET TYPE		**PIPE SIZE/OUTLET TYPE**	**ADD**
IP	Threaded	2IP, 3IP	N/C
SUFFIXES			**ADD**
–G	Galvanized Cast Iron		330.00

ZXN400 "TYPE A" HEAVY-DUTY NICKEL BRONZE ROUND STRAINER

ENGINEERING SPECIFICATION

Zurn ZXN400 "Type A" heavy-duty round adjustable polished nickel bronze strainer top.

Strainer Designation	Dimensions in inches [mm]		Open Area sq in [cm²]	Approximate Weight lb [kg]
	Top Size inch [mm]	Height		
-5A	5 [127]	1-3/4 [44]	7 [45]	2 [1]
-6A	6 [152]		11 [71]	3 [1]

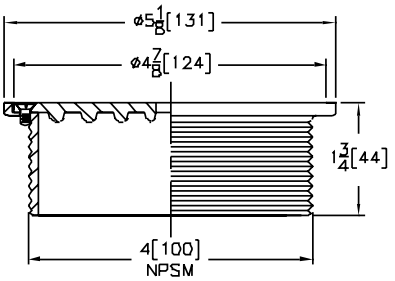

PREFIXES	DESCRIPTION	STRAINER DESIGNATION	LIST PRICE
ZXN400*	Heavy-duty round adjustable polished nickel bronze top	-5A	273.00
		-6A	381.00
SUFFIXES			**ADD**
–VP	Vandal-Proof Secured Top		41.00
–X	Squeezin Backwater Valve		90.00
–Y	Sediment Bucket (Not Available with -V)		53.00

For additional product information, please visit www.zurn.ca

**Regularly furnished unless otherwise specified.*

This symbol denotes a product that is engineered to reduce installation and rework time.

ZX400 "TYPE A" HEAVY-DUTY CAST IRON STRAINER

ENGINEERING SPECIFICATION

Zurn ZX400 "Type A" heavy-duty round adjustable Dura-Coated cast iron strainer top.

Strainer Designation	Dimensions in inches [mm]		Open Area sq in [cm²]	Approximate Weight lb [kg]
	Top Size inch [mm]	Height		
-5A	5 [127]	2-1/4 [57]	7 [45]	3 [1]

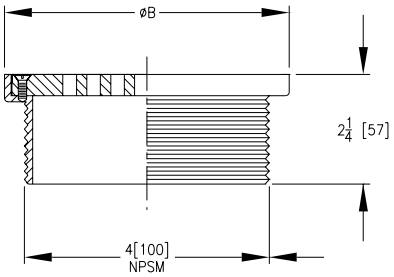

PREFIXES	DESCRIPTION	STRAINER DESIGNATION	LIST PRICE
ZX400*	Heavy-duty round adjustable Dura-Coated cast iron strainer top	-5A	132.00
SUFFIXES			**ADD**
–G	Galvanized Cast Iron Top Assembly		118.00
–VP	Vandal-Proof Secured Top		41.00
–X	Squeezin Backwater Valve		90.00
–Y	Sediment Bucket (Not Available with -V)		53.00

ZN400 "TYPE B" ROUND STRAINER WITH HEEL-PROOF SQUARE OPENINGS

ENGINEERING SPECIFICATION

Zurn ZN400 "Type B" round adjustable polished nickel bronze strainer top.

Strainer Designation	Dimensions in inches [mm]		Approximate Weight lb [kg]
	Size B	Height F	
-5B	5 [127]	1-3/4 [44]	1 [0.5]
-6B	6 [152]		
-7B	7 [178]		
-8B	8 [203]		

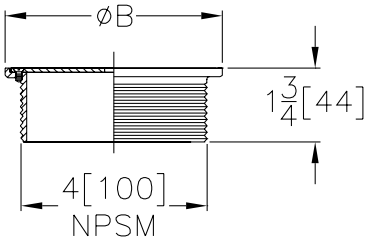

PREFIXES	DESCRIPTION	STRAINER DESIGNATION	LIST PRICE
ZN400*	Round adjustable polished nickel bronze top	-5B	185.00
		-6B	282.00
		-7B	421.00
		-8B	622.00
SUFFIXES			**ADD**
–VP	Vandal-Proof Secured Top		41.00
–X	Squeezin Backwater Valve		90.00
–Y	Sediment Bucket (Not Available with -V)		53.00

**Regularly furnished unless otherwise specified.*

This symbol denotes a product that is engineered to reduce installation and rework time.

For additional product information, please visit www.zurn.ca

ZS400 "TYPE B" ROUND STAINLESS STEEL STRAINER

ENGINEERING SPECIFICATION

Zurn ZS400 "Type B" round adjustable polished stainless steel strainer top.

Strainer Designation	Dimensions in inches [mm]		Approximate Weight lb [kg]
	Size B	Height F	
-5B	5 [127]	1-3/4 [44]	1 [0.5]

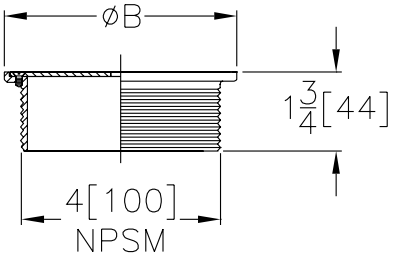

PREFIXES	DESCRIPTION	STRAINER DESIGNATION	LIST PRICE
ZS400*	Round adjustable stainless steel top	-5B	244.00
SUFFIXES			**ADD**
–VP	Vandal-Proof Secured Top		41.00
–X	Squeezin Backwater Valve		90.00
–Y	Sediment Bucket (Not Available with -V)		53.00

ZS400 "TYPE BS" ROUND STRAINER WITH SLOTTED OPENINGS

ENGINEERING SPECIFICATION

Zurn ZS400BS "Type BS" round adjustable medium-duty strainer top includes heel-proof slotted, secured grate.

Strainer Designation	Dimensions in inches [mm]		Open Area sq in [cm²]	Approximate Weight lb [kg]
	Size B	Height F		
-5BS	5 [127]	2 [51]	7 [45]	1-1/2 [1/2]
-6BS	6 [152]	2-1/4 [57]	11 [71]	2-1/2 [1]
-7BS	7 [178]	2-5/8 [67]	15 [97]	3 [1]
-8BS	8 [203]		20 [129]	4-1/2 [2]
-10BS	10 [254]	3 [76]	26-1/2 [171]	8 [4]

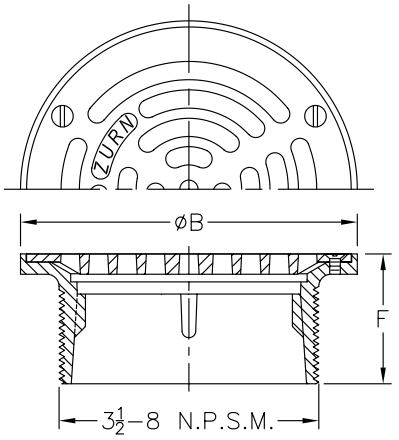

PREFIXES	DESCRIPTION	STRAINER DESIGNATION	LIST PRICE
ZS400*	Type 304 (CF8) Stainless Steel Top	-5BS	812.00
		-6BS	1,059.00
		-7BS	1,423.00
		-8BS	1,494.00
		-10BS	1,820.00
ZM400	Type 316 (CF8M) Stainless Steel Top	-5BS	POA
		-6BS	POA
		-7BS	POA
		-8BS	POA
		-10BS	POA
SUFFIXES			**ADD**
–VP	Vandal-Proof Secured Top		41.00
–Y	Stainless Steel Sediment Bucket		58.00

For additional product information, please visit www.zurn.ca

**Regularly furnished unless otherwise specified.*

This symbol denotes a product that is engineered to reduce installation and rework time.

ZN400 "TYPE BF" ROUND NICKEL BRONZE STRAINER WITH OVAL FUNNEL - OPEN THROAT

ENGINEERING SPECIFICATION

Zurn ZN400 "Type BF" round adjustable polished nickel bronze strainer with nickel bronze open throat oval funnel.

Strainer Designation	Approximate Weight lb [kg]
-BF	4 [2]

PREFIXES	DESCRIPTION	STRAINER DESIGNATION	LIST PRICE
ZN400*	Round polished nickel bronze strainer with nickel bronze open throat oval funnel	-BF	528.00
Z400	Round cast iron strainer with open throat funnel	-BF	266.00
SUFFIXES			**ADD**
–G	Galvanized Cast Iron Top Assembly		185.00
–VP	Vandal-Proof Secured Top		41.00
–X	Squeezin Backwater Valve		90.00
–Y	Sediment Bucket (Not Available with -V)		53.00

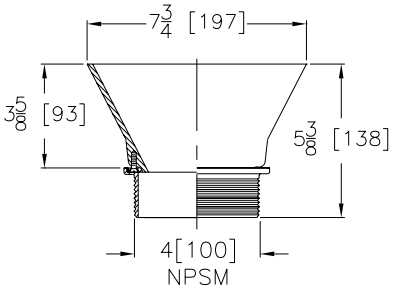

Z400 "TYPE BL" ROUND STRAINER WITH DEX-O-TEX FLANGE

ENGINEERING SPECIFICATION

Zurn Z( )400BL "Type BL" round adjustable light-duty strainer features Dura-Coated cast iron 13" [330 mm] diameter latex membrane flange, nickel bronze or polished bronze frame, and secured grate. (Specify ZB or ZN finish.)

Strainer Designation	Top Size inch [mm]	Open Area sq in [cm²]	Approximate Weight lb [kg]
-5BL	5 [127]	7 [45]	5 [2]

PREFIXES	DESCRIPTION	STRAINER DESIGNATION	LIST PRICE
ZN400*	Polished Nickel Bronze Top	-5BL	868.00
ZB400	Polished Bronze Top	-5BL	847.00
SUFFIXES			**ADD**
–CP	Chrome-Plated Bronze Top		59.00
⏲ –PC	Protective Cover		55.00
–VP	Vandal-Proof Secured Top		41.00
–Y	Sediment Bucket		53.00

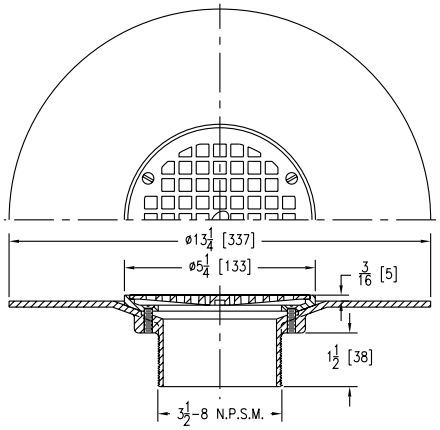

*Regularly furnished unless otherwise specified.

⏲ *This symbol denotes a product that is engineered to reduce installation and rework time.*

For additional product information, please visit www.zurn.ca

Z400 "TYPE C" ROUND HINGED STRAINER

ENGINEERING SPECIFICATION

Zurn Z( )400C "Type C" round adjustable light-duty strainer top includes slotted heel-proof openings and hinged grate. (Specify ZB or ZN finish.)

Strainer Designation	Dimensions in inches [mm]		Open Area sq in [cm²]	Approximate Weight lb [kg]
	Size B	Height F		
-5C	5 [127]	2 [51]	8 [52]	2 [1]
-6C	6 [152]	2-1/4 [57]	9 [58]	3 [1]
-7C	7 [178]	2-5/8 [67]	13 [84]	4 [2]
-8C	8 [203]		18 [116]	5 [2]

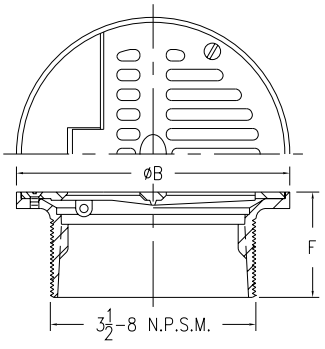

PREFIXES	DESCRIPTION	STRAINER DESIGNATION	LIST PRICE
ZN400*	Polished Nickel Bronze Top	-5C	594.00
		-6C	664.00
		-7C	821.00
		-8C	901.00
ZB400	Polished Bronze Top	-5C	561.00
		-6C	629.00
		-7C	779.00
		-8C	854.00

SUFFIXES		ADD
–CP	Chrome-Plated Bronze Top	59.00
⏲ –PC	Protective Cover	55.00
–V	Backwater Valve (Not Available with -Y)	448.00
–VP	Vandal-Proof Secured Top	41.00
–Y	Sediment Bucket (Not Available with -V)	53.00

Z400 "TYPE E" ROUND STRAINER WITH INTEGRAL FUNNEL

ENGINEERING SPECIFICATION

Zurn Z( )400E "Type E" round adjustable strainer top includes combination funnel/grate with perimeter openings. (Specify ZB or ZN finish.)

Strainer Designation	Top Size inch [mm]	Open Area sq in [cm²]	Approximate Weight lb [kg]
-7E	7 [178]	5 [32]	10 [5]

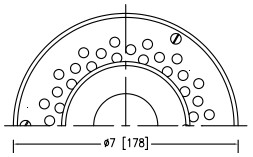

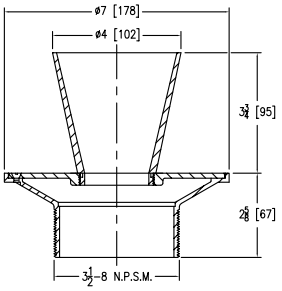

PREFIXES	DESCRIPTION	STRAINER DESIGNATION	LIST PRICE
ZN400*	Polished Nickel Bronze Top	-7E	999.00
ZB400	Polished Bronze Top	-7E	921.00

SUFFIXES		ADD
–V	Backwater Valve (Not Available with -Y)	400.00
–VP	Vandal-Proof Secured Top	59.00
–Y	Sediment Bucket (Not Available with -V)	116.00

For additional product information, please visit www.zurn.ca

**Regularly furnished unless otherwise specified.*

⏲ *This symbol denotes a product that is engineered to reduce installation and rework time.*

Z400 "TYPE G" ROUND STRAINER WITH DOME

ENGINEERING SPECIFICATION

Zurn Z( )400G "Type G" round adjustable strainer top includes secured slotted dome strainer. (Specify ZB or ZN finish.)

Strainer Designation	Dimensions in inches [mm]		Open Area sq in [cm²]	Approximate Weight lb [kg]
	Size B	Height F		
-5G	5 [127]	2 [51]	15 [97]	2 [1]
-6G	6 [152]	2-1/4 [57]		4 [2]

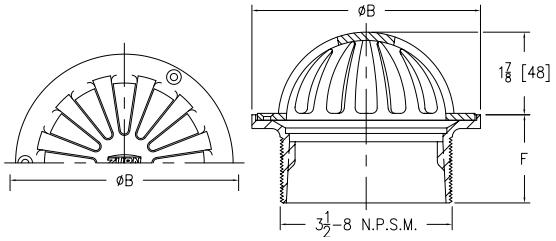

PREFIXES	DESCRIPTION	STRAINER DESIGNATION	LIST PRICE
ZN400*	Polished Nickel Bronze Top	-5G	294.00
		-6G	359.00
SUFFIXES			**ADD**
–SS	Stainless Mesh Screen Over Dome		301.00
–V	Backwater Valve (Not Available with -Y)		448.00
–VP	Vandal-Proof Secured Top		41.00
–Y	Sediment Bucket (Not Available with -V)		53.00

ZXN400 "TYPE H" HEAVY-DUTY SQUARE ADJUSTABLE STRAINER

ENGINEERING SPECIFICATION

Zurn ZXN400 "Type H" heavy-duty square polished nickel bronze adjustable strainer top.

Strainer Designation	B Top Size Inches [mm]	Open Area sq in [cm²]	Approximate Weight lb [kg]
-6H	6 x 6 [152 x 152]	12 [77]	4 [2]

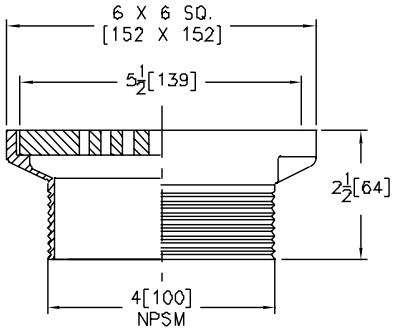

PREFIXES	DESCRIPTION	STRAINER DESIGNATION	LIST PRICE
ZXN400*	Heavy-Duty Square Polished Nickel Bronze Top	-6H	435.00
SUFFIXES			**ADD**
–VP	Vandal-Proof Secured Top		41.00
–X	Squeezin Backwater Valve		90.00
–Y	Sediment Bucket		53.00

*Regularly furnished unless otherwise specified.

This symbol denotes a product that is engineered to reduce installation and rework time.

For additional product information, please visit www.zurn.ca

Z400 "TYPE I" ROUND STRAINER WITH RAISED LIP

ENGINEERING SPECIFICATION

Zurn Z( )400I "Type I" round adjustable strainer top includes loose set recessed grate. (Specify ZB or ZN finish.)

Strainer Designation	Dimensions in inches [mm]			Open Area sq in [cm²]	Approximate Weight lb [kg]
	Size B	C	Height F		
-5I	5-7/16 [138]	7/8 [22]	3 [76]	8 [52]	5 [2]
-7I	7-3/8 [187]	1 [25]	3-3/4 [95]	13 [84]	10 [5]
-9I	9 [229]	1/2 [13]	3-1/2 [89]	23 [148]	14 [6]

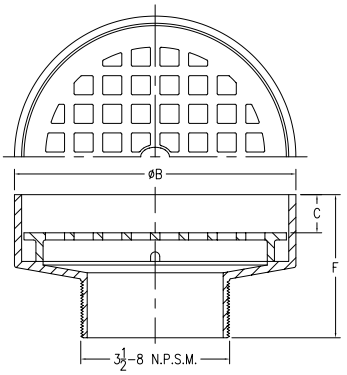

PREFIXES	DESCRIPTION	STRAINER DESIGNATION	LIST PRICE
ZN400*	Polished Nickel Bronze Top	-5I	627.00
		-7I	779.00
		-9I	1,055.00
ZB400	Polished Bronze Top	-5I	596.00
		-7I	743.00
		-9I	1,005.00
SUFFIXES			**ADD**
–TS	Top Secured with Slotted Screws		59.00
–V	Backwater Valve (Not Available with -Y)		448.00
–VP	Vandal-Proof Secured Top		41.00
–Y	Sediment Bucket (Not Available with -V)		53.00

Z400 "TYPE J" RECTANGULAR STRAINER WITH HEEL-PROOF SLOTTED OPENINGS

ENGINEERING SPECIFICATION

Zurn Z( )400J "Type J" rectangular adjustable light-duty heel-proof strainer top with Dura-Coated cast iron head, polished frame and secured slotted grate. (Specify ZB or ZN finish.)

Strainer Designation	Dimensions in inches [mm]		Open Area sq in [cm²]	Approximate Weight lb [kg]
	Size B' x B	Height F		
-8J	4-1/2 [114] x 8 [203]	3 [76]	12 [77]	4 [2]
-9J	5 [127] x 9 [229]		15 [97]	5 [2]
-13J	5-1/2 [140] x 13 [330]	4-7/8 [124]	20 [129]	9 [4]
-17J	5 [127] x 17 [432]	3-1/2 [89]	29 [187]	14 [6]
-21J	5 [127] x 21 [533]		32 [206]	18 [8]
-20J	10 [254] x 20 [508]	3-5/8 [92]	66 [426]	34 [15]

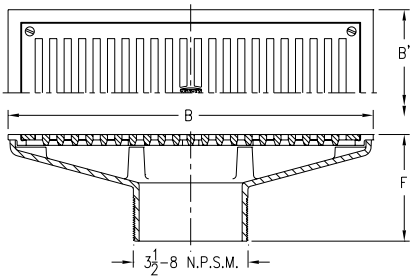

PREFIXES	DESCRIPTION	STRAINER DESIGNATION	LIST PRICE
ZN400*	Polished Nickel Bronze Top	-8J	554.00
		-9J	554.00
		-13J	601.00
		-17J	1,301.00
		-21J	2,010.00
		-20J	4,063.00
ZB400	Polished Bronze Top	-8J	528.00
		-9J	528.00
		-13J	575.00
		-17J	1,234.00
		-21J	1,913.00
		-20J	3,861.00
SUFFIXES			**ADD**
–G	Galvanized Cast Iron		173.00
–V	Backwater Valve (Not Available with -Y)		357.00
–VP	Vandal-Proof Secured Top		41.00
–Y	Sediment Bucket (Not Available with -V)		53.00

For additional product information, please visit www.zurn.ca

**Regularly furnished unless otherwise specified.*

This symbol denotes a product that is engineered to reduce installation and rework time.

Z400 "TYPE K" ANGULAR STRAINER

ENGINEERING SPECIFICATION

Zurn Z( )400K "Type K" angular adjustable light-duty strainer top includes secured flush type angle grate. (Specify ZB or ZN finish.)

Strainer Designation	Dimensions in inches [mm]				Open Area sq in [cm²]	Approximate Weight lb [kg]
	Size B x B'	C	D	Height F		
-5K	3-3/4 [95] x 5 [127]	1-7/32 [31]	3-3/4 [95]	2-3/8 [60]	11 [71]	9 [4]
-7K	6-5/8 [168] x 7 [178]	2-15/46 [59]	6-5/8 [168]	3-3/4 [95]	29 [187]	16 [7]

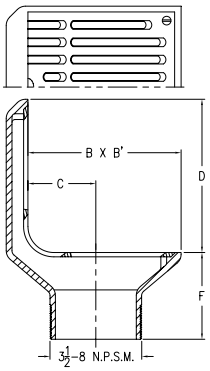

PREFIXES	DESCRIPTION	STRAINER DESIGNATION	LIST PRICE
ZN400*	Polished Nickel Bronze Top	-5K	686.00
		-7K	1,075.00
ZB400	Polished Bronze Top	-5K	646.00
		-7K	1,022.00
SUFFIXES			**ADD**
–V	Backwater Valve (Not Available with -Y)		448.00
–VP	Vandal-Proof Secured Top		41.00
–Y	Sediment Bucket (Not Available with -V)		116.00

Z400 "TYPE M" ROUND STRAINER WITH SLOTTED OPENINGS AND SUR-SET BUCKET

ENGINEERING SPECIFICATION

Zurn Z( )400M "Type M" round adjustable light-duty strainer top includes slotted heel-proof openings, secured grate, and Sur-Set bucket. (Specify ZB or ZN finish.)

Strainer Designation	Dimensions in inches [mm]		Open Area sq in [cm²]	Approximate Weight lb [kg]
	Size B	Height F		
-5M	5 [127]	2 [51]	4-1/2 [29]	2 [1]

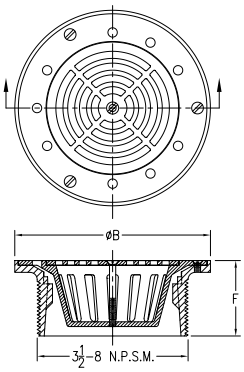

PREFIXES	DESCRIPTION	STRAINER DESIGNATION	LIST PRICE
ZN400*	Polished Nickel Bronze Top	-5M	1,158.00
ZB400	Polished Bronze Top	-5M	1,089.00
SUFFIXES			**ADD**
⏲ –PC	Protective Cover		55.00
–VP	Vandal-Proof Secured Top		41.00

*Regularly furnished unless otherwise specified.

⏲ *This symbol denotes a product that is engineered to reduce installation and rework time.*

For additional product information, please visit www.zurn.ca

Z400 "TYPE N" ROUND STRAINER WITH DEEP FLANGED GRATE

ENGINEERING SPECIFICATION

Zurn Z( )400N "Type N" round adjustable light-duty strainer top includes loose set deep flanged grate. (Specify Z, ZB or ZN finish.)

Strainer Designation	Dimensions in inches [mm]		Open Area sq in [cm²]	Approximate Weight lb [kg]
	Size B	Height F		
-7N	7 [178]	2-3/4 [70]	12 [77]	8 [4]
-9N	9 [229]	3 [76]	23 [148]	12 [5]

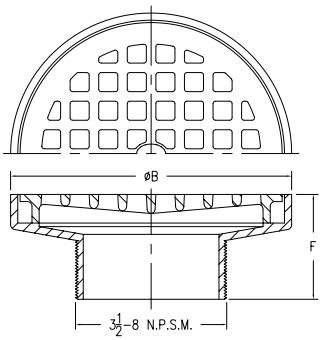

PREFIXES	DESCRIPTION	STRAINER DESIGNATION		LIST PRICE
ZN400*	Polished Nickel Bronze Top	-7N		693.00
		-9N		1,038.00
Z400	Dura-Coated Cast Iron Top	-7N		174.00
		-9N		258.00
ZB400	Polished Bronze Top	-7N		659.00
		-9N		985.00
SUFFIXES				**ADD**
–DG	Ductile Grate		7″	132.00
			9″	168.00
-G	Galvanized Cast Iron Top			249.00
–TS	Top Secured with Slotted Screws			41.00
–V	Backwater Valve (Not Available with -Y)			448.00
–VP	Vandal-Proof Secured Top			41.00
–Y	Sediment Bucket (Not Available with -V)			53.00

ZN400 "TYPE R" CIRCULAR ADJUSTABLE STRAINER WITH SURFACE CLAMP RING AND GRATE

ENGINEERING SPECIFICATION

Zurn ZN400 "Type R" nickel bronze circular adjustable strainer with surface clamp ring and grate.

Strainer Designation	Dimensions in inches [mm]		Open Area sq in [cm²]	Approximate Weight lb [kg]
	Size B	Height F		
-6R	6 [152]	2-1/8 [54]	8 [52]	3 [1]

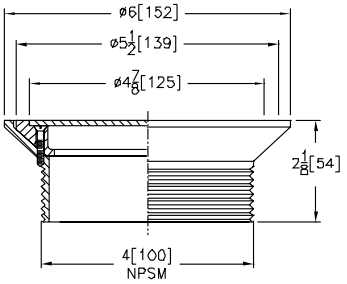

PREFIXES	DESCRIPTION	STRAINER DESIGNATION	LIST PRICE
ZN400*	Polished Nickel Bronze Top	-6R	511.00
SUFFIXES			**ADD**
–ST	Solid Top (6″ [152 mm] Only)		178.00
–VP	Vandal-Proof Secured Top		41.00
–Y	Sediment Bucket		53.00

For additional product information, please visit www.zurn.ca

**Regularly furnished unless otherwise specified.*

This symbol denotes a product that is engineered to reduce installation and rework time.

Z400 "TYPE S" SQUARE STRAINER

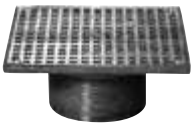

ENGINEERING SPECIFICATION

Zurn Z( )400S "Type S" square adjustable light-duty strainer top includes secured heel-proof grate. (Specify ZB or ZN finish.)

Strainer Designation	Dimensions in inches [mm]		Open Area sq in [cm²]	Approximate Weight lb [kg]
	Size B	Height F		
-5S	5 x 5 [127]	2- 1/8 [54]	9 [58]	3 [1]
-6S	6 x 6 [152]	2-11/32 [60]	13 [84]	4 [2]
-7S	7 x 7 [178]	2-3/8 [60]	21 [135]	5 [2]
-8S	8 x 8 [203]		28 [181]	6 [3]
-10S	10 x 10 [254]			12 [5]

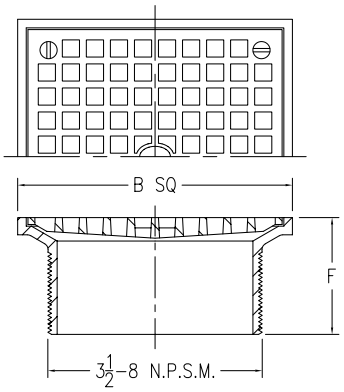

PREFIXES	DESCRIPTION	STRAINER DESIGNATION	LIST PRICE
ZN400*	Polished Nickel Bronze Top	-5S	475.00
		-6S	553.00
		-7S	707.00
		-8S	893.00
		-10S	1,536.00
ZB400	Polished Bronze Top	-5S	421.00
		-6S	515.00
		-7S	645.00
		-8S	792.00
		-10S	1,421.00
SUFFIXES			**ADD**
–CP	Chrome-Plated Bronze Top		29.00
–HD	Heavy-Duty Slotted Grate (ZN 6″ x 6″ only with 4″ shank)		215.00
–OF	Oval Funnel (6″, 7″, 8″, 10″ Strainers Only) (See Z329-7)		239.00
◷ –PC	Protective Cover		55.00
–V	Backwater Valve (Not Available with -Y)		357.00
–VP	Vandal-Proof Secured Top		41.00
–Y	Sediment Bucket (Not Available with -V)		53.00
–4	4″ Diameter Funnel (See Z328)		230.00

ZS400 "TYPE SS" SQUARE STRAINER

ENGINEERING SPECIFICATION

Zurn ZS400SS "Type SS" square adjustable strainer top includes heel-proof, medium-duty grate.

Strainer Designation	Dimensions in inches [mm]		Open Area sq in [cm²]	Approximate Weight lb [kg]
	Size B	Height F		
-5SS	5 x 5 [127]	2 [51]	8-1/2 [55]	2-1/2 [1]
-6SS	6 x 6 [152]	2-1/4 [57]	13 [84]	3-1/2 [2]
-8SS	8 x 8 [203]		24-1/2 [158]	6-1/2 [3]

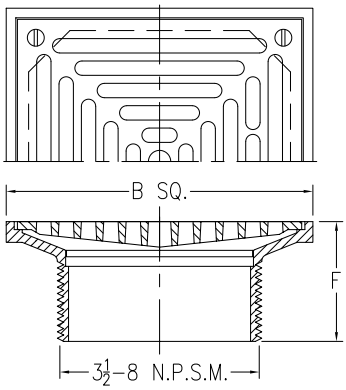

PREFIXES	DESCRIPTION	STRAINER DESIGNATION	LIST PRICE
ZS400*	Type 304 (CF8) Stainless Steel Top	-5SS	401.00
		-6SS	418.00
		-8SS	952.00
ZM400	Type 316 (CF8M) Stainless Steel Top	-5SS	POA
		-6SS	POA
		-8SS	POA
SUFFIXES			**ADD**
–VP	Vandal-Proof Secured Top		41.00
–Y	Stainless Steel Sediment Bucket		53.00

**Regularly furnished unless otherwise specified.*

◷ *This symbol denotes a product that is engineered to reduce installation and rework time.*

For additional product information, please visit www.zurn.ca

Z400 "TYPE SC" SQUARE STRAINER WITH SOLID HINGED COVER

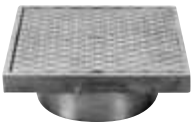

ENGINEERING SPECIFICATION

Zurn Z( )400SC "Type SC" square adjustable strainer top includes secondary strainer and solid, scoriated, hinged, light-duty cover. (Specify ZB or ZN finish).

Strainer Designation	Dimensions in inches [mm]		Approximate Weight lb [kg]
	Size B	Height F	
-6SC	6 [152]	2-15/16 [75]	7 [3]

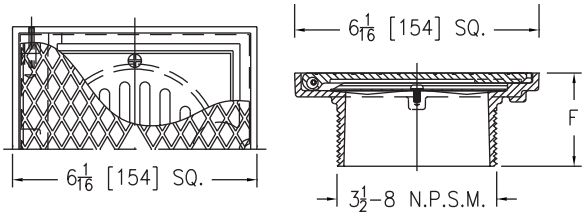

PREFIXES	DESCRIPTION	STRAINER DESIGNATION	LIST PRICE
ZN400*	Polished Nickel Bronze Top	-6SC	1,103.00
ZB400	Polished Bronze Top	-6SC	939.00
SUFFIXES			**ADD**
–CP	Chrome-Plated		313.00
-GC	Gasketed Cover		72.00
–LR	Lift Ring		235.00
–TS	Top Secured with Slotted Screw		59.00
–VP	Vandal-Proof Secured Top		59.00
–Y	Sediment Bucket		116.00

Z400 "TYPE SH" SQUARE HINGED STRAINER

ENGINEERING SPECIFICATION

Zurn Z( )400SH "Type SH" square adjustable strainer top includes light-duty hinged grate. (Specify ZB or ZN finish.)

Strainer Designation	Dimensions in inches [mm]		Open Area sq in [cm²]	Approximate Weight lb [kg]
	Size B	Height F		
-6SH	6 x 6 [152]	2-1/4 [57]	12 [77]	4 [2]
-8SH	8 x 8 [203]	3 [76]	21 [135]	8 [4]

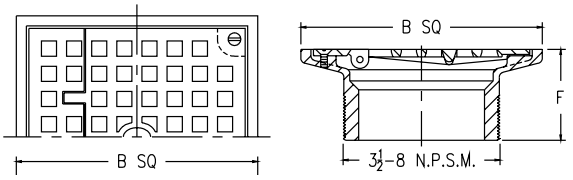

PREFIXES	DESCRIPTION	STRAINER DESIGNATION	LIST PRICE
ZN400*	Polished Nickel Bronze Top	-6SH	840.00
		-8SH	1,174.00
ZB400	Polished Bronze Top	-6SH	801.00
		-8SH	1,076.00
SUFFIXES			**ADD**
–V	Backwater Valve (Not Available with -Y)		357.00
–VP	Vandal-Proof Secured Top		41.00
–Y	Sediment Bucket (Not Available with -V)		53.00

For additional product information, please visit www.zurn.ca

**Regularly furnished unless otherwise specified.*

This symbol denotes a product that is engineered to reduce installation and rework time.

Z400-SR FLOOR DRAIN STABILIZER RING

Patented

ENGINEERING SPECIFICATION

Zurn Z400-SR floor drain stabilizer ring features Dura-Coated cast iron ring with four 1/4" [6 mm] -20 x 1/2" [13 mm] securing screws, four 1/4" [6 mm] -20 x 1-1/2" [38 mm] securing screws, and four 3/8" [10 mm] -16 x 7" [178 mm] long threaded rods. Stabilizer ring is designed to accommodate 2" [51 mm], 3" [76 mm] , and 4" [102 mm] pipe and used with 8-3/8" [213 mm] diameter (Z415) drain body.

A Pipe Size inches [mm]	Approximate Weight lb [kg]
2 [51], 3 [76], 4 [102]	3 [1]

PREFIXES	DESCRIPTION	A PIPE SIZE	LIST PRICE
Z400-SR*	Stabilizer Ring	2", 3", 4"	68.00

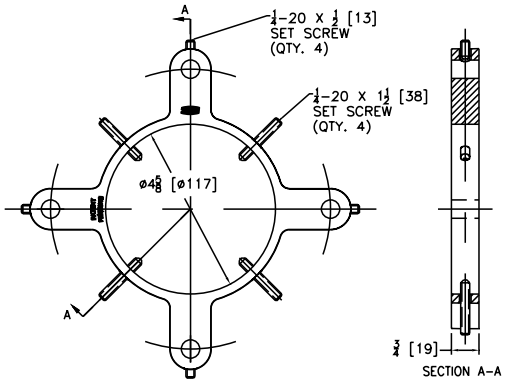

Z400-U ADJUSTABLE STRAINER EXTENSION

ENGINEERING SPECIFICATION

Zurn Z400-U "Type U" adjustable strainer extension is used as a drain extension, but also as a hub drain.

Product Designation	Size inch [mm]	Approximate Weight lb [kg]
-U	3-1/2 [89]	2 [1]

PREFIXES	DESCRIPTION	A PIPE SIZE	LIST PRICE
Z400-U*	D.C.C.I.	3-1/2"	101.00
ZN400-U	Cast Nickel Bronze Body	3-1/2"	544.00

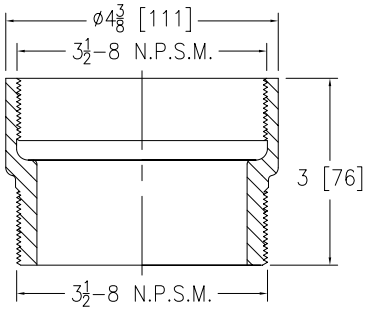

Z400-18 LEVELING RING

ENGINEERING SPECIFICATION

Zurn Z400-18 with Dura-Coated cast iron tapered ring can level Z415 clamp collar for 1/8" [3 mm] out-of-level conditions.

PREFIXES	DESCRIPTION	LIST PRICE
Z400-18*	Leveling Ring	38.00

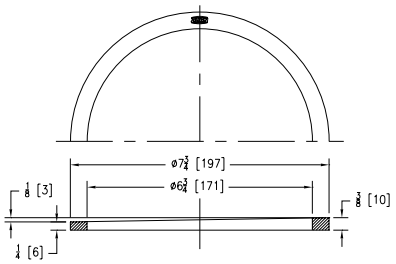

*Regularly furnished unless otherwise specified.

This symbol denotes a product that is engineered to reduce installation and rework time.

For additional product information, please visit www.zurn.ca

Z400 "TYPE Y" SQUARE STRAINER

ENGINEERING SPECIFICATION

Zurn Z400 "Type Y" square adjustable strainer top.

Strainer Designation	Dimensions in inches [mm]		Open Area sq in [cm²]	Approximate Weight lb [kg]
	Size B	Height F		
-5Y	5 x 5 [127 x 127]	2-1/2 [64 mm]	9 [58]	2 [1]
-6Y	6 x 6 [152 x 152]		12 [77]	

PREFIXES	DESCRIPTION	STRAINER DESIGNATION	LIST PRICE
ZN400	Polished Nickel Bronze Top	-5Y	385.00
		-6Y	435.00
SUFFIXES			**ADD**
–VP	Vandal-Proof Secured Top		41.00
–Y	Sediment Bucket		53.00

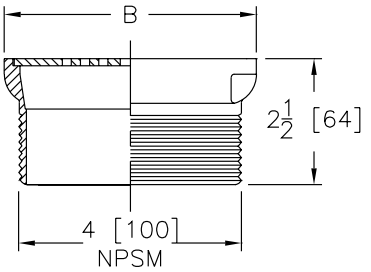

ZSS400 "TYPE Y" SQUARE STAINLESS STEEL STRAINER

ENGINEERING SPECIFICATION

Zurn ZSS400 "Type Y" square adjustable stainless steel strainer top.

Strainer Designation	Dimensions in inches [mm]		Open Area sq in [cm²]	Approximate Weight lb [kg]
	Size B	Height F		
-5Y	5 x 5 [127 x 127]	2-1/2 [64 mm]	9 [58]	2 [1]

PREFIXES	DESCRIPTION	STRAINER DESIGNATION	LIST PRICE
ZSS400*	Stainless Steel Top	-5Y	447.00
SUFFIXES			**ADD**
–VP	Vandal-Proof Secured Top		41.00
–Y	Sediment Bucket		53.00

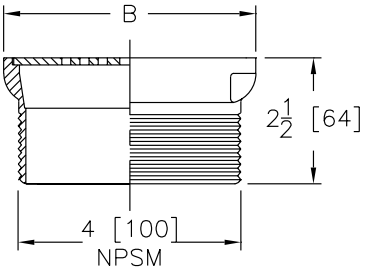

ZXN400 "TYPE Y" HEAVY-DUTY SQUARE ADJUSTABLE STRAINER

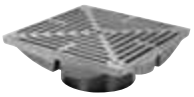

ENGINEERING SPECIFICATION

Zurn ZXN400 "Type Y" heavy-duty square 8" x 8" [203 mm x 203 mm] adjustable polished nickel bronze strainer top.

Strainer Designation	Dimensions in inches [mm]		Open Area sq in [cm²]	Approximate Weight lb [kg]
	Size B	Height F		
-8Y	8 x 8 [203 x 203]	2-3/4 [70]	26 [168]	6 [3]

PREFIXES	DESCRIPTION	STRAINER DESIGNATION	LIST PRICE
ZX400	Cast Iron Top	-8Y	282.00
ZXN400	Polished Nickel Bronze Top	-8Y	800.00
SUFFIXES			**ADD**
–G	Galvanized (ZX Only)		101.00
–VP	Vandal-Proof Secured Top		41.00
–Y	Sediment Bucket		53.00

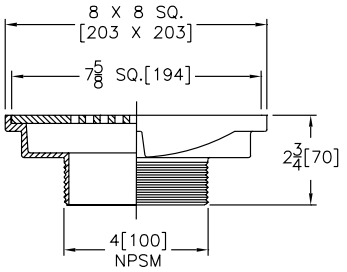

For additional product information, please visit www.zurn.ca

**Regularly furnished unless otherwise specified.*

This symbol denotes a product that is engineered to reduce installation and rework time.

Z499B ROUND PROTECTIVE COVER FOR FLOOR DRAINS

ENGINEERING SPECIFICATION

Zurn Z499B floor drain protective cover features galvanized carbon steel plate with slotted screw holes to allow rotational assembly and removal without disengaging the strainer screws. Designed for use with standard ZB and ZN400 'Type B' strainer assemblies.

PREFIXES	DESCRIPTION	PRODUCT DESIGNATION	LIST PRICE
Z499B*	Floor Drain Protective Cover	-5, -6, -7, -8, -10	385.00

Product Designation	No. of Screw Slots	Diameter A inch [mm]	B RBC inch [mm]
-5	3	5-3/16 [132]	2-1/4 [57]
-6		6-3/16 [157]	2-3/4 [70]
-7		7 [178]	3-1/8 [79]
-8		8 [203]	3-5/8 [92]
-10	4	9-5/8 [244]	4-1/8 [104]

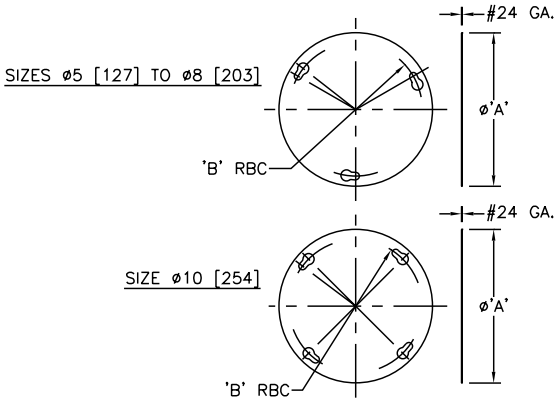

Z499S SQUARE PROTECTIVE COVER FOR FLOOR DRAINS

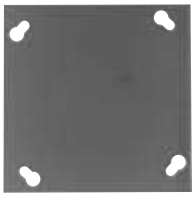

ENGINEERING SPECIFICATION

Zurn Z499S floor drain protective cover features galvanized carbon steel plate with slotted screw holes to allow rotational assembly and removal without disengaging the strainer screws. Designed for use with standard ZB and ZN400 'Type S' strainer assemblies.

PREFIXES	DESCRIPTION	PRODUCT DESIGNATION	LIST PRICE
Z499S*	Floor Drain Protective Cover	-5, -6, -7, -8, -10	385.00

Product Designation	No. of Screw Slots	Diameter A inch [mm]	B RBC inch [mm]
-5	4	5 [127]	3-7/8 [98]
-6		6 [152]	4-7/8 [124]
-7		7 [178]	6 [152]
-8		8 [203]	7-1/8 [181]
-9		9 [229]	
-10		10 [254]	

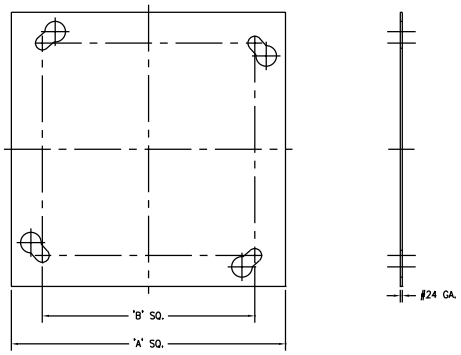

*Regularly furnished unless otherwise specified.

This symbol denotes a product that is engineered to reduce installation and rework time.

For additional product information, please visit www.zurn.ca

Z414 4" [102 MM] ROUND FUNNEL

ENGINEERING SPECIFICATION

Zurn Z414 4" [102 mm] Round Funnel. 4" [102 mm] or 6" [152 mm] (specify) diameter funnel converting assembly, Dura-Coated cast iron (or nickel bronze), with necessary fasteners to secure funnel to strainer. Note: For Stainless Steel, see Z1724

PREFIXES	DESCRIPTION	PRODUCT DESIGNATION	LIST PRICE
Z414*	D.C.C.I. Funnel	-4	118.00
		-6	118.00
ZN414	Polished Nickel Bronze Funnel	-4	240.00
		-6	240.00
SUFFIXES			**ADD**
–G	Galvanized		103.00

Size	Open Area Inches [mm]
-4	4 [102]
-6	6 [152]

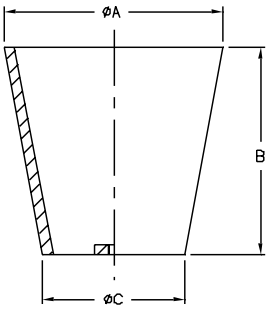

Z414-1 3-1/2" X 9" [89 MM X 229 MM] OVAL FUNNEL

ENGINEERING SPECIFICATION

Zurn Z414-1 3-1/2" x 9" [89 mm x 229 mm] Oval Funnel. 3-1/2" x 9" [89 mm x 229 mm] diameter funnel converting assembly, Dura-Coated cast iron (or nickel bronze), with necessary fasteners to secure funnel to strainer. (Available on 6" [152 mm] diameter or larger size drain tops only.)

NOTES

For stainless steel, see Z1725.

PREFIXES	DESCRIPTION	LIST PRICE
Z414-1*	D.C.C.I. Funnel	158.00
ZN414-1	Polished Nickel Bronze Funnel	328.00
SUFFIXES		**ADD**
–G	Galvanized	118.00

Approximate Weight lb [kg]	Open Area Inches [mm]
3 [1]	3-1/2 x 9 [89 x229]

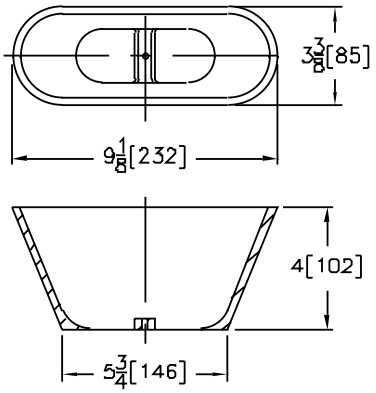

Z415-BZ1 BODY ASSEMBLY W/ "TYPE B" STRAINER AND EZ1™ TECHNOLOGY

Patent Pending

ENGINEERING SPECIFICATION

Zurn Z415-BZ1 floor and shower drain features Dura-coated cast iron body with bottom outlet, combination invertible membrane clamp and adjustable collar with seepage slots, and top assembly. EZ1 drainage series is engineered to simplify product installation, comprised of concrete shield, up to 1" [25 mm] of vertical post pour adjustment, pre-packaged shims for tilt correction and integrated self-contained "Type B" light duty strainer with rough-in cover for protection during concrete pour.

NOTES

Minimum K dimension only with -LR option for 6" [152 mm] and 8"

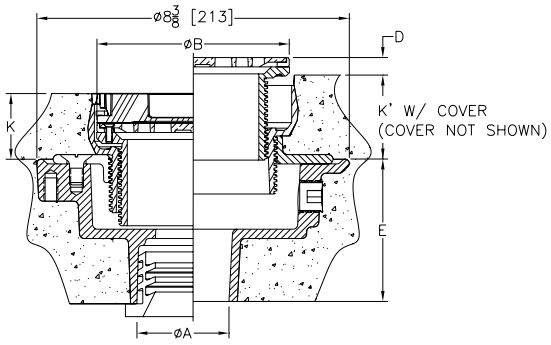

Strainer Designation	Dimensions in inches								Strainer Open Area Sq. In [cm²]	Approximate Weight lb [kg]
	A Pipe Size	B Strainer Dia.	D		K		K'			
			Min.	Max.	Min.	Max.	Min.	Max.		
-5B	2-3 [51-76]	5 [127]	0	1 [25]	1-25/32 [45]	2-31/32 [75]	2-9/32 [58]	3-15/32 [88]	6-1/4 [40]	16 [7]
-6B	2-3-4 [51-76-102]	6 [152]	0	1 [25]	1-13/16 [46]	3 [76]	2-5/16 [59]	3-1/2 [89]	9 [58]	19 [9]
-8B	3-4 [76-102]	8 [203]	0	31/32 [25]	2-5/32 [55]	3-11/32 [85]	2-21/32 [67]	3-27/32 [98]	20 [129]	24 [11]
-8B	6 [152]	8 [203]	0	31/32 [25]	2-5/32 [55]	3-11/32 [85]	2-21/32 [67]	3-27/32 [98]	20 [129]	26 [12]

PREFIXES	DESCRIPTION	STRAINER DESIG.	PIPE SIZE	LIST PRICE
ZN415-BZ1*	D.C.C.I. Body Assembly with Polished Nickel Bronze Top	–5B	2", 3"	853.00
		–6B	2", 3", 4"	891.00
		–8B	3", 4"	1,122.00
			6"	POA
ZB415-BZ1	D.C.C.I. Body Assembly with Polished Bronze Top	–5B	2", 3"	831.00
		–6B	2", 3", 4"	952.00
		–8B	3", 4"	1,188.00
			6"	POA
ZS415-BZ1	D.C.C.I. Body Assembly with Stainless Steel Top	–5B	2", 3"	952.00
		–6B	2", 3", 4"	1,045.00
		–8B	3", 4"	2,046.00
			6"	POA

OUTLETS (SPECIFY PIPE SIZE IN INCHES AND TYPE OF OUTLET)				
OUTLET TYPE		PIPE SIZE/ OUTLET TYPE	E BODY HT. DIM.	ADD
IC	Inside Caulk	2IC, 3IC, 4IC	4-3/16"	157.00
IP	Threaded	2IP	2-7/16"	N/C
		3IP	2-3/4"	98.00
		4IP	2-13/16"	98.00
		6IP	2-7/8"	98.00
NH	No-Hub	2NH, 3NH, 4NH	3-13/16"	N/C
NL	Neo-Loc	2NL, 3NL, 4NL	3-7/8"	98.00

SUFFIXES			ADD
–EF	3/4" Extension Frame		226.00
–G	Galvanized Cast Iron		173.00
–LR	Low Rough-In (For 6" & 8" Only)		235.00
–P	Trap Primer Connection (Specify 1/2"*)		22.00
–SA	Stabilizer Assembly (See Z1035)		141.00
–SQ	Stabilizer Q-deck (See Z1035-Q)		194.00
–SR	Stabilizer Ring (See Z400-SR)		68.00
–TC	Neo-Loc Test Cap Gasket (2", 3", 4" NL Bottom Outlet Only)		116.00
–TSP	Trap Seal Protection Device (Size Matches Drain Outlet Selected, See Z1072)		POA
–U	2"-3-1/4" High Extension Adapter	D.C.	101.00
		Galv.	275.00
–UP	1-3/4" Pre-Pour Adjustment Extension Adapter		171.00
–VP	Vandal-Proof Secured Top		41.00
–Y	Sediment Bucket		53.00

*Regularly furnished unless otherwise specified.

This symbol denotes a product that is engineered to reduce installation and rework time.

For additional product information, please visit www.zurn.ca

Z415-SZ1 BODY ASSEMBLY W/ "TYPE S" STRAINER AND EZ1™ TECHNOLOGY

Patent Pending

ENGINEERING SPECIFICATION

Zurn Z415-SZ1 floor and shower drain features Dura-coated cast iron body with bottom outlet, combination invertible membrane clamp, and adjustable collar with seepage slots and top assembly. EZ1 drainage series is engineered to simplify product installation, comprised of concrete shield, up to 1" [25 mm] of vertical post pour adjustment, pre-packaged shims for tilt correction and integrated self-contained "Type S" nickel bronze light duty strainer with rough-in cover for protection during concrete pour.

NOTES

Minimum K dimension only with -LR option

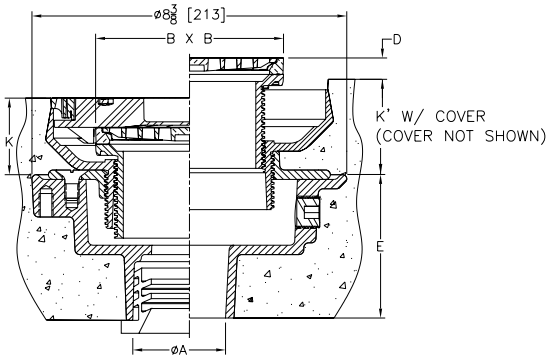

Strainer Designation	Dimensions in inches								Strainer Open Area Sq. In [cm²]	Approximate Weight lb [kg]
	A Pipe Size	BxB Strainer Top Size	D		K		K'			
			Min.	Max.	Min.	Max.	Min.	Max.		
-5S	2-3 [51-76]	5 X 5 [127 X 127]	0	1 [25]	2-1/16 [52]	3-1/4 [83]	2-9/16 [65]	3-3/4 [95]	9 [58]	19 [9]
-6S	2-3-4 [51-76-102]	6 X 6 [152 X 152]	0	1 [25]	2-1/8 [54]	3-5/16 [84]	2-5/8 [67]	3-13/16 [97]	13 [84]	22 [10]
-8S	3-4 [76-102]	8 X 8 [203 X 203]	0	15/16 [24]	2-1/2 [64]	3-11/16 [94]	3 [76]	4-3/16 [106]	27 [174]	27 [12]
-8S	6 [152]	8 X 8 [203 X 203]	0	15/16 [24]	2-1/2 [64]	3-11/16 [94]	3 [76]	4-3/16 [106]	27 [174]	28 [13]

PREFIXES	DESCRIPTION	STRAINER DESIG.	PIPE SIZE	LIST PRICE
ZN415-SZ1*	D.C.C.I. Body Assembly with Polished Nickel Bronze Top	–5S	2", 3"	POA
		–6S	2", 3", 4"	POA
		–8S	3", 4"	POA
ZB415-SZ1	D.C.C.I. Body Assembly with Polished Bronze Top	–5S	2", 3"	POA
		–6S	2", 3", 4"	POA
		–8S	3", 4"	POA
ZS415-SZ1	D.C.C.I. Body Assembly with Stainless Steel Top	–5S	2", 3"	POA
		–6S	2", 3", 4"	POA
		–8S	3", 4"	POA

OUTLETS (SPECIFY PIPE SIZE IN INCHES AND TYPE OF OUTLET)				
OUTLET TYPE		PIPE SIZE/ OUTLET TYPE	E BODY HT. DIM.	ADD
IC	Inside Caulk	2IC, 3IC, 4IC	4-3/16"	POA
IP	Threaded	2IP	2-7/16"	POA
		3IP	2-3/4"	POA
		4IP	2-13/16"	POA
		6IP	2-7/8"	POA
NH	No-Hub	2NH, 3NH, 4NH	3-13/16"	POA
NL	Neo-Loc	2NL, 3NL, 4NL	3-7/8"	POA

SUFFIXES			ADD
–EF	3/4" Extension Frame		POA
–G	Galvanized Cast Iron		POA
–LR	Low Rough-In		POA
–P	Trap Primer Connection (Specify 1/2"*)		POA
–SA	Stabilizer Assembly (See Z1035)		POA
–SQ	Stabilizer Q-deck (See Z1035-Q)		POA
–SR	Stabilizer Ring (See Z400-SR)		POA
–TC	Neo-Loc Test Cap Gasket (2", 3", 4" NL Bottom Outlet Only)		POA
–TSP	Trap Seal Protection Device (Size Matches Drain Outlet Selected, See Z1072)		POA
–U	2"-3-1/4" High Extension Adapter	D.C.	POA
		Galv.	POA
–UP	1-3/4" Pre-Pour Adjustment Extension Adapter		POA
–VP	Vandal-Proof Secured Top		POA
–Y	Sediment Bucket		POA

For additional product information, please visit www.zurn.ca

**Regularly furnished unless otherwise specified.*

This symbol denotes a product that is engineered to reduce installation and rework time.

Z415-BZ1-DP BODY ASSEMBLY W/ "TYPE B" STRAINER, DECK PLATE AND EZ1™ TECHNOLOGY

Patent Pending

ENGINEERING SPECIFICATION

Zurn Z415-BZ1-DP floor and shower drain features Dura-Coated cast iron body with bottom outlet, stainless steel deck plate and top assembly. EZ1 drainage series is engineered to simplify product installation, comprised of concrete shield to provide up to 1" [25 mm] of vertical post pour adjustment, pre-packaged shims for tilt correction, and integrated, self-contained "Type B" light duty strainer with rough-in cover for protection during concrete pour.

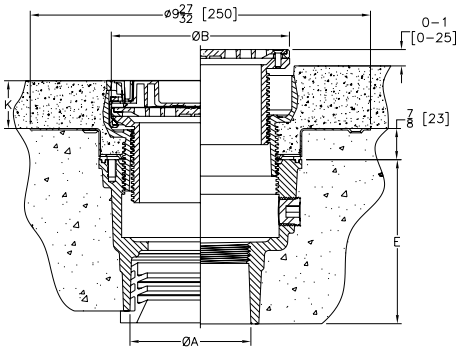

Strainer Designation	Dimensions in inches				Strainer Open Area Sq. In [cm²]	Approximate Weight lb [kg]
	A Pipe Size	B Strainer Diameter	K			
			Min.	Max.		
-5B	2-3-4 [51-76-102]	5 [127]	29/32 [23]	1-13/16 [46]	6-1/4 [40]	14 [6]

PREFIXES	DESCRIPTION	STRAINER DESIG.	PIPE SIZE	LIST PRICE
ZN415-5BZ1-DP*	D.C.C.I. Body Assembly with Polished Nickel Bronze Top	–5B	2", 3", 4"	**POA**
ZB415-5BZ1-DP	D.C.C.I. Body Assembly with Polished Bronze Top	–5B	2", 3", 4"	**POA**
ZS415-5BZ1-DP	D.C.C.I. Body Assembly with Stainless Steel Top	–5B	2", 3", 4"	**POA**

OUTLETS (SPECIFY PIPE SIZE IN INCHES AND TYPE OF OUTLET)				
OUTLET TYPE		PIPE SIZE/ OUTLET TYPE	E BODY HT. DIM.	ADD
NH	No-Hub	2NH, 3NH	4-3/4"	**POA**
		4NH	4-3/8"	**POA**
NL	Neo-Loc	2NL	5-1/4"	**POA**
		3NL, 4NL	4-3/8"	**POA**

SUFFIXES			ADD
–AR	Acid Resisting Epoxy Coated Cast Iron		**POA**
–CC	Stainless Steel Clamp Collar		**POA**
–EF	3/4" Extension Frame		**POA**
–G	Galvanized Cast Iron		**POA**
–P	Trap Primer Connection (1/2"*)		**POA**
–TC	Neo-Loc Test Cap Gasket (2", 3", 4" NL Bottom Outlet Only)		**POA**
–TSP	Trap Seal Protection Device (Size Matches Drain Outlet Selected, Not Available in 4", See Z1072)		**POA**
–U	2"-3-1/4" High Extension Adapter	D.C.	**POA**
		Galv.	**POA**
–UP	1-3/4" Pre-Pour Adjustment Extension Adapter		**POA**
–VP	Vandal-Proof Secured Top		**POA**
–Y	Sediment Bucket		**POA**

**Regularly furnished unless otherwise specified.*

This symbol denotes a product that is engineered to reduce installation and rework time.

For additional product information, please visit www.zurn.ca

Z415-SZ1-DP BODY ASSEMBLY W/ "TYPE S" STRAINER, DECK PLATE AND EZ1™ TECHNOLOGY

Patent Pending

ENGINEERING SPECIFICATION

Zurn Z415-SZ1-DP floor and shower drain features Dura-Coated cast iron body with bottom outlet, stainless steel deck plate, and top assembly. EZ1 drainage series is engineered to simplify product installation, comprised of concrete shield to provide up to 1" [25 mm] of vertical post pour adjustment, pre-packaged shims for tilt correction, and integrated, self-contained "Type S" light duty strainer with rough-in cover for protection during concrete pour.

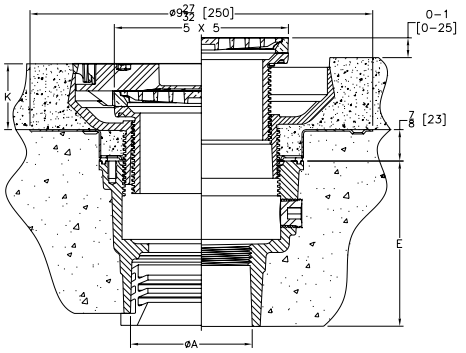

Strainer Designation	Dimensions in inches				Strainer Open Area Sq. In [cm²]	Approximate Weight lb [kg]
	A Pipe Size	BxB Strainer Top Size	K			
			Min.	Max.		
-5S	2-3-4 [51-76-102]	5 X 5 [127 X127]	1-15/16 [49]	2-3/32 [53]	9 [58]	16 [7]

PREFIXES	DESCRIPTION	STRAINER DESIG.	PIPE SIZE	LIST PRICE
ZN415-5SZ1-DP*	D.C.C.I. Body Assembly with Polished Nickel Bronze Top	–5S	2", 3", 4"	**POA**
ZB415-5SZ1-DP	D.C.C.I. Body Assembly with Polished Bronze Top	–5S	2", 3", 4"	**POA**
ZS415-5SZ1-DP	D.C.C.I. Body Assembly with Stainless Steel Top	–5S	2", 3", 4"	**POA**

OUTLETS (SPECIFY PIPE SIZE IN INCHES AND TYPE OF OUTLET)				
OUTLET TYPE		PIPE SIZE/ OUTLET TYPE	E BODY HT. DIM.	ADD
NH	No-Hub	2NH, 3NH	4-3/4"	**POA**
		4NH	4-3/8"	**POA**
NL	Neo-Loc	2NL	5-1/4"	**POA**
		3NL, 4NL	4-3/8"	**POA**

SUFFIXES			ADD
–AR	Acid Resisting Epoxy Coated Cast Iron		**POA**
–CC	Stainless Steel Clamp Collar		**POA**
–EF	3/4" Extension Frame		**POA**
–G	Galvanized Cast Iron		**POA**
–P	Trap Primer Connection (1/2"*)		**POA**
–TC	Neo-Loc Test Cap Gasket (2", 3", 4" NL Bottom Outlet Only)		**POA**
–TSP	Trap Seal Protection Device (Size Matches Drain Outlet Selected, Not Available in 4", See Z1072)		**POA**
–U	2"-3-1/4" High Extension Adapter	D.C.	**POA**
		Galv.	**POA**
–UP	1-3/4" Pre-Pour Adjustment Extension Adapter		**POA**
–VP	Vandal-Proof Secured Top		**POA**
–Y	Sediment Bucket		**POA**

For additional product information, please visit www.zurn.ca

**Regularly furnished unless otherwise specified.*

This symbol denotes a product that is engineered to reduce installation and rework time.

Z415B-DP BODY ASSEMBLY W/ "TYPE B" STRAINER AND DECK PLATE

Patent Pending

ENGINEERING SPECIFICATION

Zurn Z415B-DP floor and shower drain features Dura-Coated cast iron body with bottom outlet, stainless steel deck plate, and "Type B" polished nickel bronze light duty top assembly.

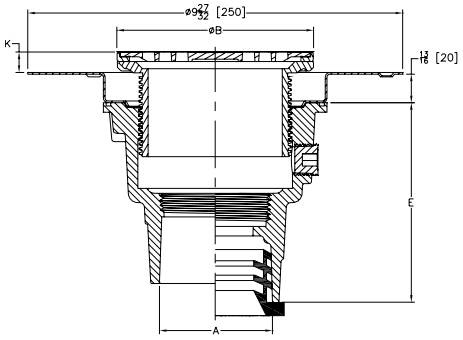

Strainer Designation	Dimensions in inches				Strainer Open Area Sq. In [cm²]	Approximate Weight lb [kg]
	A Pipe Size	B Strainer Diameter	K			
			Min.	Max.		
-5B	2-3-4 [51-76-102]	5 [127]	0	1-7/16 [37]	6-1/4 [40]	11 [5]

PREFIXES	DESCRIPTION	STRAINER DESIG.	PIPE SIZE	LIST PRICE
ZN415-B-DP*	D.C.C.I. Body Assembly with Polished Nickel Bronze Top	–5B	2", 3", 4"	POA
ZB415-B-DP	D.C.C.I. Body Assembly with Polished Bronze Top	–5B	2", 3", 4"	POA
ZS415-B-DP	D.C.C.I. Body Assembly with Stainless Steel Top	–5B	2", 3", 4"	POA

OUTLETS (SPECIFY PIPE SIZE IN INCHES AND TYPE OF OUTLET)				
OUTLET TYPE		PIPE SIZE/ OUTLET TYPE	E BODY HT. DIM.	ADD
NH	No-Hub	2NH	4-7/8"	POA
		3NH	4-3/4"	POA
		4NH	4"	POA
NL	Neo-Loc	2NL	5-1/4"	POA
		3NL	4-3/8"	POA
		4NL	4-3/8"	POA

SUFFIXES			ADD
–AR	Acid Resisting Epoxy Coated Cast Iron		POA
–CC	Stainless Steel Clamp Collar		POA
–EF	3/4" Extension Frame		POA
–FI	Floor Insert		POA
–G	Galvanized Cast Iron		POA
–P	Trap Primer Connection (1/2"*)		POA
–TC	Neo-Loc Test Cap Gasket (2", 3", 4" NL Bottom Outlet Only)		POA
–U	2"-3-1/4" High Extension Adapter	D.C.	POA
		Galv.	POA
–VP	Vandal-Proof Secured Top		POA
–Y	Sediment Bucket		POA

*Regularly furnished unless otherwise specified.

This symbol denotes a product that is engineered to reduce installation and rework time.

For additional product information, please visit www.zurn.ca

Z415S-DP BODY ASSEMBLY W/ "TYPE S" STRAINER AND DECK PLATE

Patent Pending

ENGINEERING SPECIFICATION

Zurn Z415S-DP floor and shower drain, Dura-Coated cast iron body with bottom outlet, stainless steel deck plate, and "Type S" polished nickel bronze light duty top assembly.

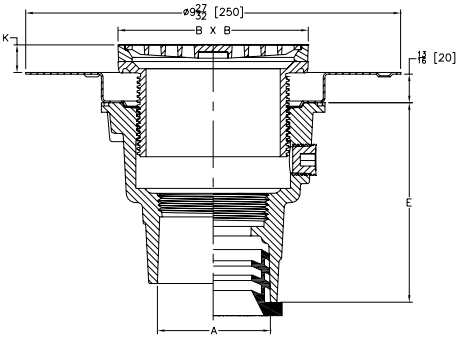

Strainer Designation	Dimensions in inches				Strainer Open Area Sq. In [cm²]	Approximate Weight lb [kg]
	A Pipe Size	BxB Strainer Top Size	K			
			Min.	Max.		
-5S	2-3-4 [51-76-102]	5 X 5 [127 X 127]	7/16 [11]	1-7/16 [37]	9 [58]	12 [5]

PREFIXES	DESCRIPTION	STRAINER DESIG.	PIPE SIZE	LIST PRICE
ZN415-S-DP*	D.C.C.I. Body Assembly with Polished Nickel Bronze Top	–5S	2", 3", 4"	POA
ZB415-S-DP	D.C.C.I. Body Assembly with Polished Bronze Top	–5S	2", 3", 4"	POA
ZS415-S-DP	D.C.C.I. Body Assembly with Stainless Steel Top	–5S	2", 3", 4"	POA

OUTLETS (SPECIFY PIPE SIZE IN INCHES AND TYPE OF OUTLET)				
OUTLET TYPE		PIPE SIZE/ OUTLET TYPE	E BODY HT. DIM.	ADD
NH	No-Hub	2NH	4-7/8"	POA
		3NH	4-3/4"	POA
		4NH	4"	POA
NL	Neo-Loc	2NL	5-1/4"	POA
		3NL	4-3/8"	POA
		4NL	4-3/8"	POA

SUFFIXES			ADD
–AR	Acid Resisting Epoxy Coated Cast Iron		POA
–CC	Stainless Steel Clamp Collar		POA
–EF	3/4" Extension Frame		POA
–G	Galvanized Cast Iron		POA
–P	Trap Primer Connection (1/2"*)		POA
–TC	Neo-Loc Test Cap Gasket (2", 3", 4" NL Bottom Outlet Only)		POA
–U	2"-3-1/4" High Extension Adapter	D.C.	POA
		Galv.	POA
–VP	Vandal-Proof Secured Top		POA
–Y	Sediment Bucket		POA

For additional product information, please visit www.zurn.ca

**Regularly furnished unless otherwise specified.*

This symbol denotes a product that is engineered to reduce installation and rework time.

Z415 FLOOR DRAIN BODY WITH CLAMPING COLLAR

ENGINEERING SPECIFICATION

Zurn Z415 cast iron body with bottom outlet, combination invertible membrane clamp and adjustable collar with seepage holes. For use with Z400 Strainer Series.

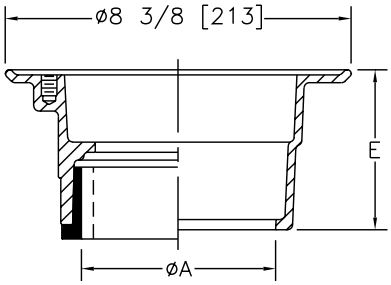

A Pipe Size	Approximate Weight lb [kg]
2 [51], 3 [76], 4 [102]	8 [4]
6 [152]	10 [5]

PREFIXES	DESCRIPTION	STRAINER DESIG.	PIPE SIZE	LIST PRICE
Z415	D.C.C.I. Body Assembly ONLY (add "-L/Top" to product sku)	No Strainer	2", 3", 4"	158.00
			6"	448.00

OUTLETS (SPECIFY PIPE SIZE IN INCHES AND TYPE OF OUTLET)				
OUTLET TYPE		PIPE SIZE/OUTLET TYPE	E BODY HT. DIM.	ADD
IC	Inside Caulk	2IC, 3IC, 4IC	3-7/8" [98 mm]	N/C
IG	Inside Gasket	2IG	3-7/8" [98 mm]	41.00
IP	Threaded	2IP, 3IP, 4IP, 6IP	2-5/8" [67 mm]	98.00
NH	No-Hub	2NH, 3NH, 4NH	3-7/8" [98 mm]	N/C
		6NH (6IP with Z1040)	5-1/2" [140 mm]	354.00
NL	Neo-Loc	2NL, 3NL, 4NL	4-5/8" [117 mm]	41.00

SUFFIXES		ADD
–AR	Acid Resisting Epoxy Coated Cast Iron	349.00
–G	Galvanized Cast Iron	157.00
–P	Trap Primer Connection (Specify 1/2" [13 mm] or 3/4" [19 mm])	22.00
◷ –SR	Stabilizer Ring (See Z400-SR)	68.00
–U	1"-3" [25 mm-76 mm] High Extension Adapter (See Z400-U)	101.00
	For each additional 1" [25 mm] above 3" [76 mm]	101.00
–90	90° Threaded Side Outlet Body (2" [51 mm] and 3" [76 mm] Only)	194.00
	For Side Outlet Body Assembly Only	354.00

**Regularly furnished unless otherwise specified.*

◷ This symbol denotes a product that is engineered to reduce installation and rework time.

For additional product information, please visit www.zurn.ca

ZX415-A FLOOR DRAIN WITH HEAVY-DUTY ROUND STRAINER

ENGINEERING SPECIFICATION

Zurn ZX415-A Floor and Shower Drain, Dura-Coated cast iron body with bottom outlet, combination invertible membrane clamp and adjustable collar with seepage holes, and "Type A" heavy-duty Dura-Coated cast iron strainer.

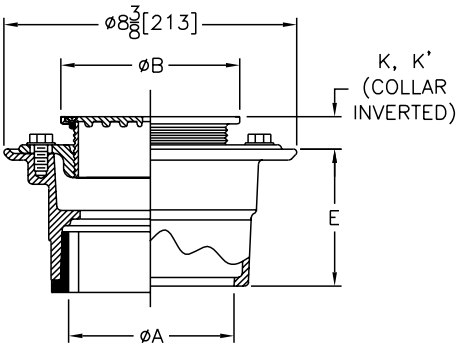

Strainer Designation	Dimensions in inches [mm]						Str. Open Area sq in [cm²]	Approximate Weight lb [kg]
	A Pipe Size	B Diameter	K		K			
			Min.	Max.	Min.	Max.		
-5A	2 [51], 3 [76], 4 [102]	5 [127]	1/2 [13]	1-5/8 [41]	1-3/8 [35]	2-3/8 [60]	7 [45]	11 [5]
-5A	6 [152]							13 [6]

PREFIXES	DESCRIPTION	STRAINER DESIG.	PIPE SIZE	LIST PRICE
ZX415*	D.C.C.I. Body Assembly with heavy-duty dura-coated cast iron strainer	–5A	2", 3", 4"	285.00
		–5A	6"	577.00
Z415	D.C.C.I. Body Assembly ONLY (add "-L/Top" to product sku)	No Strainer	2", 3", 4"	158.00
			6"	448.00

OUTLETS (SPECIFY PIPE SIZE IN INCHES AND TYPE OF OUTLET)

OUTLET TYPE		PIPE SIZE/OUTLET TYPE	E BODY HT. DIM.	ADD
IC	Inside Caulk	2IC, 3IC, 4IC	3-7/8" [98 mm]	N/C
IP	Threaded	2IP, 3IP, 4IP, 6IP	2-5/8" [67 mm]	98.00
NH	No-Hub	2NH, 3NH, 4NH	3-7/8" [98 mm]	N/C
		6NH (6IP with Z1040)	5-1/2" [140 mm]	354.00
NL	Neo-Loc	2NL, 3NL, 4NL	4-5/8" [117 mm]	41.00

SUFFIXES		ADD
–AR	Acid Resisting Epoxy Coated Cast Iron	349.00
–FS	Floating Slab	457.00
–G	Galvanized Cast Iron	173.00
–P	Trap Primer Connection (Specify 1/2" [13 mm] or 3/4" [19 mm])	22.00
⏲ –PC	Protective Cover	55.00
⏲ –SA	Stabilizer Assembly (See Z1035)	141.00
⏲ –SQ	Stabilizer Q-deck (See Z1035-Q)	194.00
⏲ –SR	Stabilizer Ring (See Z400-SR)	68.00
⏲ –TC	Neo-Loc Test Cap Gasket (2", 3", 4" NL Bottom Outlet Only)	26.00
–U	1"-3" [25mm-76mm] High Extension Adapter (See Z400-U)	101.00
	For each additional 1" [25 mm] above 3" [76 mm]	101.00
–V	Backwater Valve (Not Available with -Y)	357.00
–VP	Vandal-Proof Secured Top	41.00
–X	Squeezin Backwater Valve	90.00
–Y	Sediment Bucket (Not Available with -V)	53.00
–414	4" [102 mm] Diameter Nickel Bronze Funnel	240.00
–90	90° Threaded Side Outlet Body (2" [51 mm] and 3" [76 mm] Only)	194.00
	For Side Outlet Body Assembly Only	354.00

For additional product information, please visit www.zurn.ca

**Regularly furnished unless otherwise specified.*

⏲ *This symbol denotes a product that is engineered to reduce installation and rework time.*

ZXN415-A FLOOR DRAIN WITH HEAVY-DUTY ROUND STRAINER

ENGINEERING SPECIFICATION

Zurn ZXN415-A Floor and Shower Drain, Dura-Coated cast iron body with bottom outlet, combination invertible membrane clamp and adjustable collar with seepage holes, and "Type A" heavy-duty strainer.

NOTES

For other available strainer variations see Z400 Strainer Series. Add price for required strainer to "BODY ONLY" price in chart. Specify type and size required.

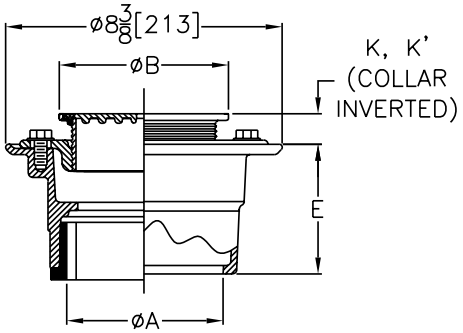

Strainer Designation	Dimensions in inches [mm]						Str. Open Area sq in [cm²]	Approximate Weight lb [kg]
	A Pipe Size	B Diameter	K		K			
			Min.	Max.	Min.	Max.		
-5A	2 [51], 3 [76], 4 [102]	5 [127]	1/2 [13]	1-5/8 [41]	1-3/8 [35]	2-3/8 [60]	7 [45]	10 [5]
-5A	6 [152]							12 [5]
-6A	2 [51], 3 [76], 4 [102]	6 [152]	3/4 [19]	1-3/4 [44]	1-5/8 [41]	2-3/4 [70]	11 [71]	11 [5]
-6A	6 [152]							14 [6]

PREFIXES	DESCRIPTION	STRAINER DESIG.	PIPE SIZE	LIST PRICE
ZXN415*	D.C.C.I. Body Assembly with heavy-duty polished nickel bronze strainer	–5A	2", 3", 4"	431.00
		–5A	6"	720.00
		–6A	2", 3", 4"	541.00
		–6A	6"	829.00
Z415	D.C.C.I. Body Assembly ONLY (add "-L/Top" to product sku)	No Strainer	2", 3", 4"	158.00
			6"	448.00

OUTLETS (SPECIFY PIPE SIZE IN INCHES AND TYPE OF OUTLET)

OUTLET TYPE		PIPE SIZE/OUTLET TYPE	E BODY HT. DIM.	ADD
IC	Inside Caulk	2IC, 3IC, 4IC	3-7/8" [98 mm]	N/C
IG	Inside Gasket	2IG	3-7/8" [98 mm]	41.00
IP	Threaded	2IP, 3IP, 4IP, 6IP	2-5/8" [67 mm]	98.00
NH	No-Hub	2NH, 3NH, 4NH	3-7/8" [98 mm]	N/C
		6NH (6IP with Z1040)	5-1/2" [140 mm]	354.00
NL	Neo-Loc	2NL, 3NL, 4NL	4-5/8" [117 mm]	41.00

SUFFIXES		ADD
–AR	Acid Resisting Epoxy Coated Cast Iron	349.00
–EF	3/8" [10 mm] Extension Frame	226.00
–FS	Floating Slab	457.00
–G	Galvanized Cast Iron	173.00
–P	Trap Primer Connection (Specify 1/2" [13 mm] or 3/4" [19 mm])	22.00
◷ –PC	Protective Cover	55.00
◷ –SA	Stabilizer Assembly (See Z1035)	141.00
◷ –SQ	Stabilizer Q-deck (See Z1035-Q)	194.00
◷ –SR	Stabilizer Ring (See Z400-SR)	68.00
◷ –TC	Neo-Loc Test Cap Gasket (2", 3", 4" NL Bottom Outlet Only)	26.00
–U	1"-3" [25 mm-76 mm] High Extension Adapter (See Z400-U)	101.00
	For each additional 1" [25 mm] above 3" [76 mm]	101.00
–V	Backwater Valve (Not Available with -Y)	357.00
–VP	Vandal-Proof Secured Top	41.00
–X	Squeezin Backwater Valve	90.00
–Y	Sediment Bucket (Not Available with -V)	53.00
–414	4" [102 mm] Diameter Nickel Bronze Funnel	240.00
–90	90° Threaded Side Outlet Body (2" [51 mm] and 3" [76 mm] Only)	194.00
	For Side Outlet Body Assembly Only	354.00

**Regularly furnished unless otherwise specified.*

◷ *This symbol denotes a product that is engineered to reduce installation and rework time.*

For additional product information, please visit www.zurn.ca

ZN415-B FLOOR AND SHOWER DRAIN WITH ROUND STRAINER

ENGINEERING SPECIFICATION

Zurn ZN415-B Floor and Shower Drain, Dura-Coated cast iron body with bottom outlet, combination invertible membrane clamp and adjustable collar with seepage holes, and "Type B" polished nickel bronze strainer.

NOTES

For other available strainer variations see Z400 Strainer Series. Add price for required strainer to "BODY ONLY" price in chart. Specify type and size required.

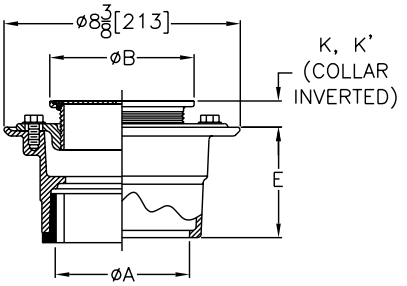

Strainer Designation	Dimensions in inches [mm]						Str. Open Area sq in [cm²]	Approximate Weight lb [kg]
	A Pipe Size	B Diameter	K		K			
			Min.	Max.	Min.	Max.		
-5B	2 [51], 3 [76], 4 [102]	5 [127]	1/2 [13]	1-5/8 [41]	1-3/8 [35]	2-3/8 [60]	8 [52]	11 [5]
-5B	6 [152]							
-6B	2 [51], 3 [76], 4 [102]	6 [152]	3/4 [19]	1-3/4 [44]	1-5/8 [41]	2-3/4 [70]	9 [58]	13 [6]
-6B	6 [152]							
-7B	2 [51], 3 [76], 4 [102]	7 [178]	1 [25]	2-1/4 [57]	2 [51]	3-1/8 [79]	12 [77]	14 [6]
-7B	6 [152]							
-8B	3 [76], 4 [102]	8 [203]	1-1/8 [29]				18 [116]	16 [7]
	6 [152]							

PREFIXES	DESCRIPTION	STRAINER DESIG.	PIPE SIZE	LIST PRICE
ZN415*	D.C.C.I. Body Assembly with Polished Nickel Bronze Top	–5B	2", 3", 4"	343.00
		–5B	6"	631.00
		–6B	2", 3", 4"	437.00
		–6B	6"	729.00
		–7B	2", 3", 4"	575.00
		–7B	6"	865.00
		–8B	3", 4"	777.00
		–8B	6"	1,067.00
Z415	D.C.C.I. Body Assembly ONLY (add "–L/Top" to product sku)	No Strainer	2", 3", 4"	158.00
			6"	448.00

OUTLETS (SPECIFY PIPE SIZE IN INCHES AND TYPE OF OUTLET)

OUTLET TYPE		PIPE SIZE/ OUTLET TYPE	E BODY HT. DIM.	ADD
IC	Inside Caulk	2IC, 3IC, 4IC	3-7/8" [98 mm]	N/C
IP	Threaded	2IP, 3IP, 4IP, 6IP	2-5/8" [67 mm]	98.00
NH	No-Hub	2NH, 3NH, 4NH	3-7/8" [98 mm]	N/C
		6NH (6IP with Z1040)	5-1/2" [140 mm]	354.00
NL	Neo-Loc	2NL, 3NL, 4NL	4-5/8" [117 mm]	41.00

SUFFIXES		ADD
–AR	Acid Resisting Epoxy Coated Cast Iron	349.00
–FS	Floating Slab	457.00
–G	Galvanized Cast Iron	173.00
–P	Trap Primer Connection (Specify 1/2" [13 mm] or 3/4" [19 mm])	22.00
◷ –PC	Protective Cover	55.00
◷ –SA	Stabilizer Assembly (See Z1035)	141.00
◷ –SQ	Stabilizer Q-deck (See Z1035-Q)	194.00
◷ –SR	Stabilizer Ring (See Z400-SR)	68.00
◷ –TC	Neo-Loc Test Cap Gasket (2", 3", 4" NL Bottom Outlet Only)	26.00
–U	1"-3" [25 mm-76 mm] High Extension Adapter (See Z400-U)	101.00
	For each additional 1" [25 mm] above 3" [76 mm]	101.00
–V	Backwater Valve (Not Available with -Y)	357.00
–VP	Vandal-Proof Secured Top	41.00
–X	Squeezin Backwater Valve	90.00
–Y	Sediment Bucket (Not Available with -V)	53.00
–414	4" [102 mm] Diameter Nickel Bronze Funnel	240.00
–90	90° Threaded Side Outlet Body (2" [51 mm] and 3" [76 mm] Only)	194.00
	For Side Outlet Body Assembly Only	354.00

For additional product information, please visit www.zurn.ca

**Regularly furnished unless otherwise specified.*

◷ *This symbol denotes a product that is engineered to reduce installation and rework time.*

ZN415-BE FUNNEL FLOOR DRAIN

ENGINEERING SPECIFICATION

Zurn ZN415-BE Funnel Floor Drain features a Dura-Coated cast iron body with bottom outlet, combination invertible membrane clamp and adjustable collar with seepage holes, and "Type BE" polished nickel bronze round funnel grate.

NOTES

For other available strainer variations see Z400 Strainer Series. Add price for required strainer to "BODY ONLY" price in chart. Specify type and size required.

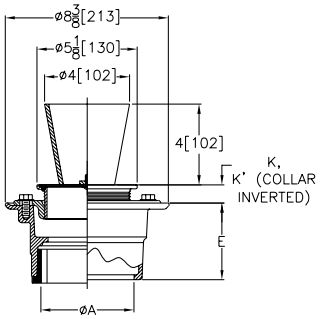

Strainer Designation	Dimensions in inches [mm]						Str. Open Area sq in [cm²]	Approximate Weight lb [kg]
	A Pipe Size	B Diameter	K		K			
			Min.	Max.	Min.	Max.		
-5BE	2 [51], 3 [76], 4 [102]	5 [127]	1/2 [13]	1-5/8 [41]	1-3/8 [35]	2-3/8 [60]	5 [32]	8 [4]
-5BE	6 [152]							

PREFIXES	DESCRIPTION	STRAINER DESIG.	PIPE SIZE	LIST PRICE
ZN415*	D.C.C.I. Body Assembly with Polished Nickel Bronze Round Funnel Grate	–5BE	2", 3", 4"	578.00
		–5BE	6"	865.00
Z415	D.C.C.I. Body Assembly ONLY (add "-L/Top" to product sku)	No Strainer	2", 3", 4"	158.00
			6"	448.00

OUTLETS (SPECIFY PIPE SIZE IN INCHES AND TYPE OF OUTLET)				
OUTLET TYPE		PIPE SIZE/ OUTLET TYPE	E BODY HT. DIM.	ADD
IC	Inside Caulk	2IC, 3IC, 4IC	3-7/8" [98 mm]	N/C
IG	Inside Gasket	2IG	3-7/8" [98 mm]	41.00
IP	Threaded	2IP, 3IP, 4IP, 6IP	2-5/8" [67 mm]	98.00
NH	No-Hub	2NH, 3NH, 4NH	3-7/8" [98 mm]	N/C
		6NH (6IP with Z1040)	5-1/2" [140 mm]	354.00
NL	Neo-Loc	2NL, 3NL, 4NL	4-5/8" [117 mm]	41.00

SUFFIXES		ADD
–AR	Acid Resisting Epoxy Coated Cast Iron	349.00
–EF	3/8" [10 mm] Extension Frame	226.00
–FS	Floating Slab	457.00
–G	Galvanized Cast Iron Body and C/C	173.00
	Galvanized Complete	267.00
–P	Trap Primer Connection (Specify 1/2" [13 mm] or 3/4" [19 mm])	22.00
◷ –SA	Stabilizer Assembly (See Z1035)	141.00
◷ –SQ	Stabilizer Q-deck (See Z1035-Q)	194.00
◷ –SR	Stabilizer Ring (See Z400-SR)	68.00
◷ –TC	Neo-Loc Test Cap Gasket (2", 3", 4" NL Bottom Outlet Only)	26.00
–U	1"-3" [25 mm-76 mm] High Extension Adapter (See Z400-U)	101.00
	For each additional 1" [25 mm] above 3" [76 mm]	101.00
–V	Backwater Valve (Not Available with -Y)	357.00
–VP	Vandal-Proof Secured Top	41.00
–X	Squeezin Backwater Valve	90.00
–Y	Sediment Bucket (Not Available with -V)	53.00
–90	90° Threaded Side Outlet Body (2" [51 mm] and 3" [76 mm] Only)	194.00
	For Side Outlet Body Assembly Only	354.00

**Regularly furnished unless otherwise specified.*

◷ This symbol denotes a product that is engineered to reduce installation and rework time.

For additional product information, please visit www.zurn.ca

ZN415-BF OVAL FUNNEL FLOOR DRAIN

ENGINEERING SPECIFICATION

Zurn ZN415-BF Oval Funnel Floor Drain features a Dura-Coated cast iron body with bottom outlet, combination invertible membrane clamp and adjustable collar with seepage holes, and "Type BF" polished nickel bronze open throat oval funnel grate.

NOTES

For other available strainer variations see Z400 Strainer Series. Add price for required strainer to "BODY ONLY" price in chart. Specify type and size required.

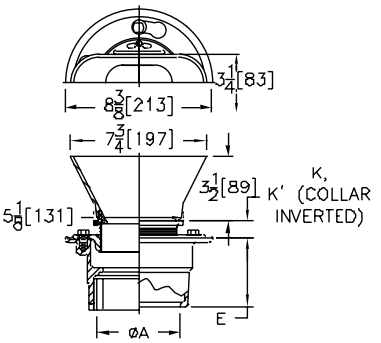

Strainer Designation	Dimensions in inches [mm]						Str. Open Area sq in [cm²]	Approximate Weight lb [kg]
	A Pipe Size	Strainer Size	K		K			
			Min.	Max.	Min.	Max.		
-BF	2 [51], 3 [76], 4 [102]	3-1/4 x 8 [83 x 203]	1/2 [13]	1-5/8 [41]	1-3/8 [35]	2-3/8 [60]	3 [19]	12 [5]
-BF	6 [152]							

PREFIXES	DESCRIPTION	STRAINER DESIG.	PIPE SIZE	LIST PRICE
ZN415*	D.C.C.I. Body Assembly with Polished Nickel Bronze Oval Funnel Grate	–BF	2", 3", 4"	686.00
		–BF	6"	974.00
Z415	D.C.C.I. Body Assembly ONLY (add "-L/Top" to product sku)	No Strainer	2", 3", 4"	158.00
			6"	448.00

OUTLETS (SPECIFY PIPE SIZE IN INCHES AND TYPE OF OUTLET)				
OUTLET TYPE		PIPE SIZE/ OUTLET TYPE	E BODY HT. DIM.	ADD
IC	Inside Caulk	2IC, 3IC, 4IC	3-7/8" [98 mm]	N/C
IG	Inside Gasket	2IG	3-7/8" [98 mm]	41.00
IP	Threaded	2IP, 3IP, 4IP, 6IP	2-5/8" [67 mm]	98.00
NH	No-Hub	2NH, 3NH, 4NH	3-7/8" [98 mm]	N/C
		6NH (6IP with Z1040)	5-1/2" [140 mm]	354.00
NL	Neo-Loc	2NL, 3NL, 4NL	4-5/8" [117 mm]	41.00

SUFFIXES		ADD
–AR	Acid Resisting Epoxy Coated Cast Iron	349.00
–EF	3/8" [10 mm] Extension Frame	226.00
–FS	Floating Slab	457.00
–G	Galvanized Cast Iron Body and C/C	173.00
	Galvanized Complete	267.00
–P	Trap Primer Connection (Specify 1/2" [13 mm] or 3/4" [19 mm])	22.00
◷ –SA	Stabilizer Assembly (See Z1035)	141.00
◷ –SQ	Stabilizer Q-deck (See Z1035-Q)	194.00
◷ –SR	Stabilizer Ring (See Z400-SR)	68.00
◷ –TC	Neo-Loc Test Cap Gasket (2", 3", 4" NL Bottom Outlet Only)	26.00
–U	1"-3" [25 mm-76 mm] High Extension Adapter (See Z400-U)	101.00
	For each additional 1" [25 mm] above 3" [76 mm]	101.00
–V	Backwater Valve (Not Available with -Y)	357.00
–VP	Vandal-Proof Secured Top	41.00
–X	Squeezin Backwater Valve	90.00
–Y	Sediment Bucket (Not Available with -V)	53.00
–90	90° Threaded Side Outlet Body (2" [51 mm] and 3" [76 mm] Only)	194.00
	For Side Outlet Body Assembly Only	354.00

For additional product information, please visit www.zurn.ca

**Regularly furnished unless otherwise specified.*

◷ *This symbol denotes a product that is engineered to reduce installation and rework time.*

ZS415 BODY ASSEMBLY WITH "TYPE BS" STRAINER

ENGINEERING SPECIFICATION

Zurn ZS415BS floor and shower drain features Dura-Coated cast iron body with bottom outlet, combination invertible membrane clamp and adjustable collar with seepage slots, and "Type BS" stainless steel heel-proof, medium-duty strainer assembly.

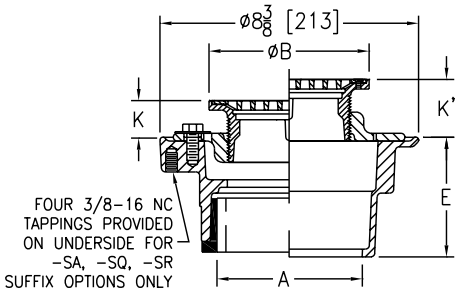

Strainer Designation	Dimensions in inches [mm]						Str. Open Area sq in [cm²]	Approximate Weight lb [kg]
	A Pipe Size	B Diameter	K		K'			
			Min.	Max.	Min.	Max.		
-5BS	2 [51], 3 [76]	5 [127]	1 [25]	1-1/2 [38]	1-3/32 [27]	2-1/4 [57]	6-3/4 [44]	10 [5]
-6BS	2 [51], 3 [76], 4 [102]	6 [152]		1-25/32 [45]	1-13/32 [36]	2-17/32 [64]	10-1/2 [68]	11 [5]
-7BS		7 [178]		2-1/8 [54]	1-23/32 [44]	2-7/8 [73]	15 [97]	12 [5]
-8BS	3 [76], 4 [102]	8 [203]	1-5/32 [29]		1-3/4 [44]		20 [129]	13 [6]
	6 [152]							15 [7]
-10BS		10 [254]	1-7/16 [37]	2-1/2 [64]	2 [51]	3-1/4 [83]	26-1/2 [171]	17 [8]

PREFIXES	DESCRIPTION	STRAINER DESIG.	PIPE SIZE	LIST PRICE
ZS415*	D.C.C.I. Body Assembly with Type 304 Stainless Steel Top	–5BS	2", 3"	966.00
		–6BS	2", 3", 4"	1,213.00
		–7BS	2", 3", 4"	1,576.00
		–8BS	3", 4"	1,648.00
			6"	1,940.00
		–10BS	6"	2,266.00
ZM415	D.C.C.I. Body Assembly with Type 316 (CF8M) Stainless Steel Top	–5BS	2", 3"	POA
		–6BS	2", 3", 4"	POA
		–7BS	2", 3", 4"	POA
		–8BS	3", 4"	POA
			6"	POA
		–10BS	6"	POA

OUTLETS (SPECIFY PIPE SIZE IN INCHES AND TYPE OF OUTLET)				
OUTLET TYPE		PIPE SIZE/ OUTLET TYPE	E BODY HT. DIM.	ADD
IC	Inside Caulk	2IC, 3IC, 4IC	4-3/16"	157.00
IP	Threaded	2IP	2-7/16"	N/C
		3IP	2-3/4"	98.00
		4IP	2-13/16"	98.00
		6IP	2-7/8"	98.00
NH	No-Hub	2NH, 3NH, 4NH	3-13/16"	N/C
NL	Neo-Loc	2NL, 3NL, 4NL	3-7/8"	98.00

SUFFIXES			ADD
–AR	Acid Resisting Epoxy Coated Cast Iron		349.00
–G	Galvanized Cast Iron		173.00
–P	Trap Primer Connection (1/2"*)		22.00
◷ –TC	Neo-Loc Test Cap Gasket (2", 3", 4" NL Bottom Outlet Only)		116.00
–TSP	Trap Seal Protection Device (Size Matches Drain Outlet Selected, See Z1072)		POA
–U	1"-3" High Extension Adapter (See Z400-U)	D.C.	101.00
		Galv.	275.00
	For each additional 1" above 3"		101.00
–V	Backwater Valve (Not Available with -Y)		357.00
–VP	Vandal-Proof Secured Top		41.00
–Y	Sediment Bucket (Not Available with -V)		53.00

*Regularly furnished unless otherwise specified.

◷ *This symbol denotes a product that is engineered to reduce installation and rework time.*

For additional product information, please visit www.zurn.ca

Z415 BODY ASSEMBLY WITH "TYPE BL" STRAINER

ENGINEERING SPECIFICATION

Zurn ZN415BL floor and shower drain features Dura-Coated cast iron body with bottom outlet, combination invertible membrane clamp and adjustable collar with seepage slots, and "Type BL" D.C.C.I. wide flanged head and polished nickel bronze, light-duty strainer.

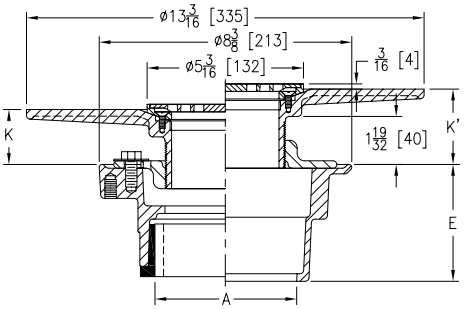

Strainer Designation	Dimensions in inches [mm]					Str. Open Area sq in [cm²]	Approximate Weight lb [kg]
	A Pipe Size	K		K'			
		Min.	Max.	Min.	Max.		
-5BL	2 [51], 3 [76], 4 [102], 5 [127], 6 [152]	7/8 [22]	2-1/4 [57]	1-11/16 [43]	3 [76]	6-1/4 [40]	14 [6]

PREFIXES	DESCRIPTION	STRAINER DESIG.	PIPE SIZE	LIST PRICE
ZN415*	D.C.C.I. Body Assembly with Polished Nickel Bronze Top	–5BL	2", 3", 4", 6"	1,027.00
ZB415	D.C.C.I. Body Assembly with Polished Bronze Top	–5BL	2", 3", 4", 6"	1,007.00
Z415	D.C.C.I. Body Assembly ONLY (add "-L/Top" to product sku)	No Strainer	2", 3", 4",	158.00
			6"	448.00

OUTLETS (SPECIFY PIPE SIZE IN INCHES AND TYPE OF OUTLET)				
OUTLET	TYPE	PIPE SIZE/ OUTLET TYPE	E BODY HT. DIM.	ADD
IC	Inside Caulk	2IC, 3IC, 4IC	4-3/16"	N/C
IP	Threaded	2IP	2-7/16"	98.00
		3IP	2-3/4"	98.00
		4IP	2-13/16"	98.00
		6IP	2-7/8"	98.00
NH	No-Hub	2NH, 3NH, 4NH	3-13/16"	N/C
NL	Neo-Loc	2NL, 3NL, 4NL	3-7/8"	41.00

SUFFIXES			ADD
–AR	Acid Resisting Epoxy Coated Cast Iron		349.00
–CP	Chrome-Plated Bronze Top		59.00
–G	Galvanized Cast Iron		173.00
–P	Trap Primer Connection (1/2"*)		22.00
◷ –PC	Protective Cover		55.00
◷ -SA	Stabilizer Assembly (See Z1035)		141.00
◷ –TC	Neo-Loc Test Cap Gasket (2", 3", 4" NL Bottom Outlet Only)		26.00
–U	1"-3" High Extension Adapter (See Z400-U)	D.C.	101.00
		Galv.	275.00
	For each additional 1" above 3"		101.00
–VP	Vandal-Proof Secured Top		41.00
–Y	Sediment Bucket		53.00
–90	90° Threaded Side Outlet Body Assembly (2" and 3" Only)		194.00

For additional product information, please visit www.zurn.ca

**Regularly furnished unless otherwise specified.*

◷ This symbol denotes a product that is engineered to reduce installation and rework time.

Z415 BODY ASSEMBLY WITH "TYPE C" STRAINER

ENGINEERING SPECIFICATION

Zurn ZN415C floor and shower drain features Dura-Coated cast iron body with bottom outlet, combination invertible membrane clamp and adjustable collar with seepage slots, and "Type C" polished, hinged nickel bronze, light-duty strainer.

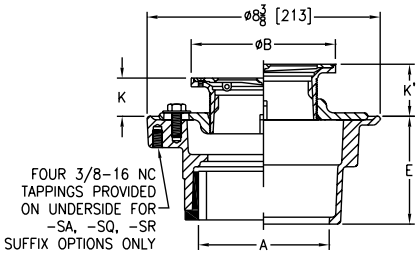

Strainer Designation	Dimensions in inches [mm]						Str. Open Area sq in [cm²]	Approximate Weight lb [kg]
	A Pipe Size	B Diameter	K		K'			
			Min.	Max.	Min.	Max.		
-5C	2 [51], 3 [76]	5 [127]	1 [25]	1-1/2 [38]	1-3/32 [27]	2-1/4 [57]	8 [52]	11 [5]
-6C	2 [51], 3 [76], 4 [102]	6 [152]		1-25/32 [45]	1-13/32 [36]	2-17/32 [64]	9 [58]	13 [6]
-7C		7 [178]		2-1/8 [54]	1-23/32 [44]	2-7/8 [73]	13 [84]	14 [6]
-8C	3 [76], 4 [102]	8 [203]	1-5/32 [29]		1-3/4 [44]		18 [116]	16 [7]
	6 [152]							18 [8]

PREFIXES	DESCRIPTION	STRAINER DESIG.	PIPE SIZE	LIST PRICE
ZN415*	D.C.C.I. Body Assembly with Polished Nickel Bronze Top	–5C	2", 3"	751.00
		–6C	2", 3", 4"	821.00
		–7C	2", 3", 4"	979.00
		–8C	3", 4"	1,055.00
			6"	1,509.00
ZB415	D.C.C.I. Body Assembly with Polished Bronze Top	–5C	2", 3"	720.00
		–6C	2", 3", 4"	785.00
		–7C	2", 3", 4"	935.00
		–8C	3", 4"	1,012.00
			6"	1,435.00
Z415	D.C.C.I. Body Assembly ONLY (add "-L/Top" to product sku)	No Strainer	2", 3", 4"	158.00
			6"	448.00

OUTLETS (SPECIFY PIPE SIZE IN INCHES AND TYPE OF OUTLET)				
OUTLET TYPE		PIPE SIZE/ OUTLET TYPE	E BODY HT. DIM.	ADD
IC	Inside Caulk	2IC, 3IC, 4IC	4-13/16"	N/C
IP	Threaded	2IP	2-7/16"	98.00
		3IP	2-3/4"	98.00
		4IP	2-13/16"	98.00
		6IP	2-7/8"	98.00
NH	No-Hub	2NH, 3NH, 4NH	3-13/16"	N/C
NL	Neo-Loc	2NL, 3NL, 4NL	3-7/8"	41.00

SUFFIXES			ADD
–AR	Acid Resisting Epoxy Coated Cast Iron		349.00
–CP	Chrome-Plated Bronze Top		29.00
–G	Galvanized Cast Iron		173.00
–P	Trap Primer Connection (1/2"*)		22.00
◷ –PC	Protective Cover		55.00
◷ –SA	Stabilizer Assembly (See Z1035)		141.00
◷ –SQ	Stabilizer Q-Deck (See Z1035-Q)		194.00
◷ –SR	Stabilizer Ring (See Z400-SR)		68.00
◷ –TC	Neo-Loc Test Cap Gasket (2", 3", 4" NL Bottom Outlet Only)		26.00
–U	1"-3" High Extension Adapter (See Z400-U)	D.C.	101.00
		Galv.	275.00
	For each additional 1" above 3"		101.00
–V	Backwater Valve (Not Available with -Y)		357.00
–VP	Vandal-Proof Secured Top		41.00
–Y	Sediment Bucket (Not Available with -V)		53.00
–90	90° Threaded Side Outlet Body Assembly (2" and 3" Only)		194.00

*Regularly furnished unless otherwise specified.

◷ *This symbol denotes a product that is engineered to reduce installation and rework time.*

For additional product information, please visit www.zurn.ca

Z415 BODY ASSEMBLY WITH "TYPE E" STRAINER

ENGINEERING SPECIFICATION

Zurn ZN415E floor and shower drain features Dura-Coated cast iron body with bottom outlet, combination invertible membrane clamp and adjustable collar with seepage slots, and "Type E" polished, nickel bronze strainer with 4" [102 mm] diameter funnel.

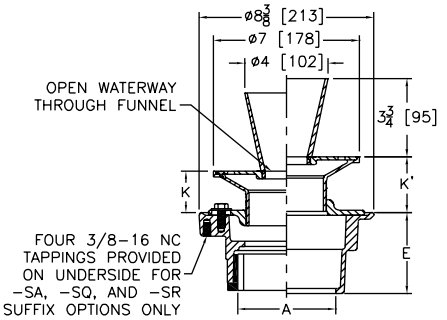

Strainer Designation	Dimensions in inches [mm]					Str. Open Area sq in [cm²]	Approximate Weight lb [kg]
	A Pipe Size	K		K'			
		Min.	Max.	Min.	Max.		
-7E	2 [51], 3 [76], 4 [102]	1 [25]	2-1/8 [54]	1-5/8 [41]	2-15/16 [75]	5 [32]	19 [9]

PREFIXES	DESCRIPTION	STRAINER DESIG.	PIPE SIZE	LIST PRICE
ZN415*	D.C.C.I. Body Assembly with Polished Nickel Bronze Top	–7E	2", 3", 4"	1,154.00
ZB415	D.C.C.I. Body Assembly with Polished Bronze Top	–7E	2", 3", 4"	1,078.00
Z415	D.C.C.I. Body Assembly ONLY (add "-L/Top" to product sku)	No Strainer	2", 3", 4"	158.00

OUTLETS (SPECIFY PIPE SIZE IN INCHES AND TYPE OF OUTLET)

OUTLET TYPE		PIPE SIZE/ OUTLET TYPE	E BODY HT. DIM.	ADD
IC	Inside Caulk	2IC, 3IC, 4IC	4-13/16"	N/C
IP	Threaded	2IP	2-7/16"	98.00
		3IP	2-3/4"	98.00
		4IP	2-13/16"	98.00
NH	No-Hub	2NH, 3NH, 4NH	3-13/16"	N/C
NL	Neo-Loc	2NL, 3NL, 4NL	3-7/8"	41.00

SUFFIXES			ADD
–AR	Acid Resisting Epoxy Coated Cast Iron		349.00
–G	Galvanized Cast Iron		173.00
–P	Trap Primer Connection (1/2"*)		22.00
⏲ –SA	Stabilizer Assembly (See Z1035)		141.00
–SC	Solid Cover		169.00
⏲ –SQ	Stabilizer Q-Deck (See Z1035-Q)		194.00
⏲ –SR	Stabilizer Ring (See Z400-SR)		68.00
⏲ –TC	Neo-Loc Test Cap Gasket (2", 3", 4" NL Bottom Outlet Only)		26.00
⏲ –U	1"-3" High Extension Adapter (See Z400-U)	D.C.	101.00
		Galv.	275.00
	For each additional 1" above 3"		104.00
–V	Backwater Valve (Not Available with -Y)		357.00
–VP	Vandal-Proof Secured Top		41.00
–Y	Sediment Bucket (Not Available with -V)		53.00
–90	90° Threaded Side Outlet Body Assembly (2" and 3" Only)		194.00

For additional product information, please visit www.zurn.ca

**Regularly furnished unless otherwise specified.*

⏲ *This symbol denotes a product that is engineered to reduce installation and rework time.*

Z415 BODY ASSEMBLY WITH "TYPE G" STRAINER

ENGINEERING SPECIFICATION

Zurn ZN415G floor and shower drain features Dura-Coated cast iron body with bottom outlet, combination invertible membrane clamp and adjustable collar with seepage slots, and "Type G" polished, nickel bronze strainer with dome grate.

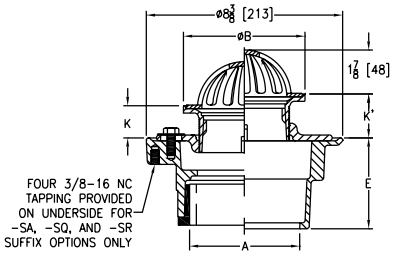

Strainer Designation	Dimensions in inches [mm]						Str. Open Area sq in [cm²]	Approximate Weight lb [kg]
	A Pipe Size	B Diameter	K		K'			
			Min.	Max.	Min.	Max.		
-5G	2 [51], 3 [76]	5 [127]	1 [25]	1-1/2 [38]	1-3/32 [27]	2-1/4 [57]	10 [65]	11 [5]
-6G	2 [51], 3 [76], 4 [102]	6 [152]		1-25/32 [45]	1-13/32 [36]	2-17/32 [64]	12 [77]	13 [6]

PREFIXES	DESCRIPTION	STRAINER DESIG.	PIPE SIZE	LIST PRICE
ZN415*	D.C.C.I. Body Assembly with Polished Nickel Bronze Top	–5G	2", 3"	404.00
		–6G	2", 3", 4"	457.00
Z415	D.C.C.I. Body Assembly ONLY (add "-L/Top" to product sku)	No Strainer	2", 3", 4"	158.00

OUTLETS (SPECIFY PIPE SIZE IN INCHES AND TYPE OF OUTLET)

OUTLET TYPE		PIPE SIZE/ OUTLET TYPE	E BODY HT. DIM.	ADD
IC	Inside Caulk	2IC, 3IC, 4IC	4-13/16"	N/C
IP	Threaded	2IP	2-7/16"	98.00
		3IP	2-3/4"	98.00
		4IP	2-13/16"	98.00
NH	No-Hub	2NH, 3NH, 4NH	3-13/16"	N/C
NL	Neo-Loc	2NL, 3NL, 4NL	3-7/8"	41.00

SUFFIXES			ADD
–AR	Acid Resisting Epoxy Coated Cast Iron		349.00
–G	Galvanized Cast Iron		173.00
–P	Trap Primer Connection (1/2"*)		22.00
⏲ –SA	Stabilizer Assembly (See Z1035)		141.00
⏲ –SQ	Stabilizer Q-Deck (See Z1035-Q)		194.00
⏲ –SR	Stabilizer Ring (See Z400-SR)		68.00
–SS	Stainless Steel Mesh Screen Over Dome		POA
⏲ –TC	Neo-Loc Test Cap Gasket (2", 3", 4" NL Bottom Outlet Only)		26.00
–U	1"-3" High Extension Adapter (See Z400-U)	D.C.	101.00
		Galv.	275.00
	For each additional 1" above 3"		101.00
–V	Backwater Valve (Not Available with -Y)		357.00
–VP	Vandal-Proof Secured Top		41.00
–Y	Sediment Bucket (Not Available with -V)		53.00
–90	90° Threaded Side Outlet Body Assembly (2" and 3" Only)		194.00

**Regularly furnished unless otherwise specified.*

⏲ This symbol denotes a product that is engineered to reduce installation and rework time.

For additional product information, please visit www.zurn.ca

ZXN415-H FLOOR DRAIN WITH HEAVY-DUTY SQUARE GRATE

ENGINEERING SPECIFICATION

Zurn ZXN-415-H Floor and Shower Drain features a Dura-Coated cast iron body with bottom outlet, combination invertible membrane clamp and adjustable collar with seepage holes, and "Type H" polished nickel bronze strainer with flashing clamp device.

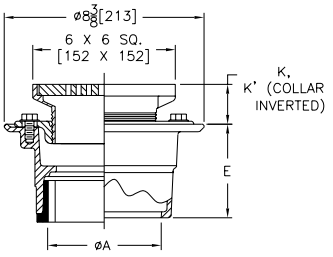

Strainer Designation	Dimensions in inches [mm]						Str. Open Area sq in [cm²]	Approximate Weight lb [kg]
	A Pipe Size	Strainer Size	K		K'			
			Min.	Max.	Min.	Max.		
-6H	2 [51], 3 [76], 4 [102]	6 x 6 [152 x 152]	1 [25]	1-25/32 [45]	1-13/32 [36]	2-17/32 [64]	12 [77]	13 [6]

PREFIXES	DESCRIPTION	STRAINER DESIG.	PIPE SIZE	LIST PRICE
ZXN415*	D.C.C.I. Body Assembly with Polished Nickel Bronze Top	-6H	2", 3", 4"	591.00
Z415	D.C.C.I. Body Assembly ONLY (add "-L/Top" to product sku)	No Strainer	2", 3", 4"	158.00

OUTLETS (SPECIFY PIPE SIZE IN INCHES AND TYPE OF OUTLET)

OUTLET TYPE		PIPE SIZE/ OUTLET TYPE	E BODY HT. DIM.	ADD
IG	Inside Gasket	2IG, 3IG, 4IG	3-7/8" [98 mm]	41.00
IP	Threaded	2IP, 3IP, 4IP, 6IP	2-5/8" [67 mm]	98.00
NH	No-Hub	2NH, 3NH, 4NH	3-7/8" [98 mm]	N/C
		6NH (6IP with Z1040)	5-1/2" [140 mm]	354.00
NL	Neo-Loc	2NL, 3NL, 4NL	4-5/8" [117 mm]	41.00

SUFFIXES			ADD
–AR	Acid Resisting Epoxy Coated Cast Iron		349.00
–G	Galvanized Cast Iron		173.00
–P	Trap Primer Connection (Specify 1/2" [13 mm] or 3/4" [19 mm])		22.00
◷ –SA	Stabilizer Assembly (See Z1035)		141.00
◷ –SQ	Stabilizer Q-Deck (See Z1035-Q)		194.00
◷ –SR	Stabilizer Ring (See Z400-SR)		68.00
◷ –TC	Neo-Loc Test Cap Gasket (2", 3", 4" NL Bottom Outlet Only)		26.00
–U	1"-3" [25 mm-76 mm] High Extension Adapter (See Z400-U)	D.C.	101.00
		Galv.	275.00
	For each additional 1" [25 mm] above 3" [76 mm]		101.00
–V	Backwater Valve (Not Available with -Y)		357.00
–X	Squeezin Backwater Valve		90.00
–VP	Vandal-Proof Secured Top		41.00
–Y	Sediment Bucket (Not Available with -V)		53.00

For additional product information, please visit www.zurn.ca

**Regularly furnished unless otherwise specified.*

◷ *This symbol denotes a product that is engineered to reduce installation and rework time.*

Z415 BODY ASSEMBLY WITH "TYPE H" STRAINER

ENGINEERING SPECIFICATION

Zurn ZN415H floor and shower drain features Dura-Coated cast iron body with bottom outlet, combination invertible membrane clamp and adjustable collar with seepage slots, and "Type H" polished, nickel bronze light-duty strainer with flashing clamp device for clamping at the finished floor level.

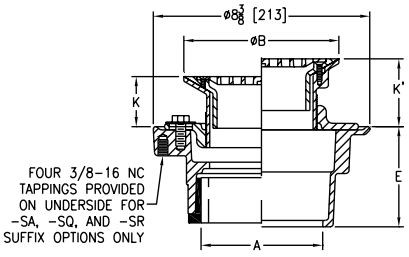

Strainer Designation	Dimensions in inches [mm]						Str. Open Area sq in [cm²]	Approximate Weight lb [kg]
	A Pipe Size	B Diameter	K		K'			
			Min.	Max.	Min.	Max.		
-6H	2 [51], 3 [76], 4 [102]	6 [152]	1-1/4 [32]	2-3/8 [60]	2-3/16 [56]	3-5/16 [84]	7 [45]	13 [6]
-9H		9 [229]	1-11/16 [43]	2-5/8 [67]	2-7/16 [62]	3-9/16 [90]	18 [116]	20 [9]

PREFIXES	DESCRIPTION	STRAINER DESIG.	PIPE SIZE	LIST PRICE
ZN415*	D.C.C.I. Body Assembly with Polished Nickel Bronze Top	-6H	2", 3", 4"	591.00
		-9H	2", 3", 4"	4,675.00
ZB415	D.C.C.I. Body Assembly with Polished Bronze Top	-6H	2", 3", 4"	1,628.00
		-9H	2", 3", 4"	3,817.00
Z415	D.C.C.I. Body Assembly ONLY (add "-L/Top" to product sku)	No Strainer	2", 3", 4"	158.00

OUTLETS (SPECIFY PIPE SIZE IN INCHES AND TYPE OF OUTLET)				
OUTLET TYPE		PIPE SIZE/ OUTLET TYPE	E BODY HT. DIM.	ADD
IP	Threaded	2IP	2-7/16"	98.00
		3IP	2-3/4"	98.00
		4IP	2-13/16"	98.00
NH	No-Hub	2NH, 3NH, 4NH	3-13/16"	N/C
NL	Neo-Loc	2NL, 3NL, 4NL	3-7/8"	41.00

SUFFIXES			ADD
–AR	Acid Resisting Epoxy Coated Cast Iron		349.00
–G	Galvanized Cast Iron		173.00
–P	Trap Primer Connection (1/2"*)		22.00
⏲ –SA	Stabilizer Assembly (See Z1035)		141.00
⏲ –SQ	Stabilizer Q-Deck (See Z1035-Q)		194.00
⏲ –SR	Stabilizer Ring (See Z400-SR)		68.00
⏲ –TC	Neo-Loc Test Cap Gasket (2", 3", 4" NL Bottom Outlet Only)		26.00
–U	1"-3" High Extension Adapter (See Z400-U)	D.C.	101.00
		Galv.	275.00
	For each additional 1" above 3"		101.00
–V	Backwater Valve (Not Available with -Y)		357.00
–VP	Vandal-Proof Secured Top		41.00
–Y	Sediment Bucket (Not Available with -V)		53.00

*Regularly furnished unless otherwise specified.

⏲ *This symbol denotes a product that is engineered to reduce installation and rework time.*

For additional product information, please visit www.zurn.ca

Z415 BODY ASSEMBLY WITH "TYPE I" STRAINER

ENGINEERING SPECIFICATION

Zurn ZN415I floor and shower drain features Dura-Coated cast iron body with bottom outlet, combination invertible membrane clamp and adjustable collar with seepage slots, and "Type I" polished, nickel bronze strainer with raised flange.

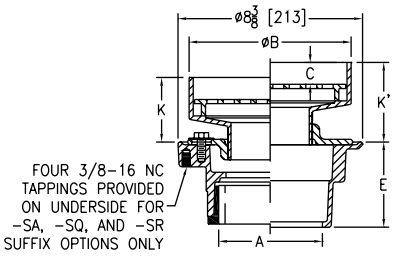

Strainer Designation	Dimensions in inches [mm]							Str. Open Area sq in [cm²]	Approximate Weight lb [kg]
	A Pipe Size	B Diameter	C	K		K'			
				Min.	Max.	Min.	Max.		
-5I	2 [51], 3 [76]	5-7/16 [138]	7/8 [22]	1-9/16 [40]	2-5/8 [67]	2-1/8 [54]	3-3/8 [86]	8 [52]	14 [6]
-7I	2 [51], 3 [76], 4 [102]	7-3/8 [187]	1 [25]	2-9/16 [65]	3-3/8 [86]	2-7/8 [73]	4-1/8 [104]	13 [84]	19 [9]
-9I	3 [76], 4 [102]	9 [229]	1/2 [13]	2-3/16 [56]	3-1/8 [79]	2-5/8 [67]	3-7/8 [98]	23 [148]	23 [10]
	6 [152]								

PREFIXES	DESCRIPTION	STRAINER DESIG.	PIPE SIZE	LIST PRICE
ZN415*	D.C.C.I. Body Assembly with Polished Nickel Bronze Top	-5I	2", 3"	784.00
		-7I	2", 3", 4"	935.00
		-9I	3", 4"	1,213.00
			6"	2,077.00
ZB415	D.C.C.I. Body Assembly with Polished Bronze Top	-5I	2", 3"	747.00
		-7I	2", 3", 4"	898.00
		-9I	3", 4"	1,159.00
			6"	1,938.00
Z415	D.C.C.I. Body Assembly ONLY (add "-L/Top" to product sku)	No Strainer	2", 3"	158.00
			2", 3", 4"	158.00
			3", 4"	158.00
			6"	448.00

OUTLETS (SPECIFY PIPE SIZE IN INCHES AND TYPE OF OUTLET)				
OUTLET TYPE		PIPE SIZE/ OUTLET TYPE	E BODY HT. DIM.	ADD
IC	Inside Caulk	2IC, 3IC, 4IC	4-13/16"	N/C
IP	Threaded	2IP	2-7/16"	98.00
		3IP	2-3/4"	98.00
		4IP	2-13/16"	98.00
		6IP	2-7/8"	98.00
NH	No-Hub	2NH, 3NH, 4NH	3-13/16"	N/C
NL	Neo-Loc	2NL, 3NL, 4NL	3-7/8"	41.00

SUFFIXES			ADD
–AR	Acid Resisting Epoxy Coated Cast Iron		349.00
–G	Galvanized Cast Iron		173.00
–P	Trap Primer Connection (1/2"*)		22.00
◷ –SA	Stabilizer Assembly (See Z1035)		141.00
◷ –SQ	Stabilizer Q-deck (See Z1035-Q)		194.00
◷ –SR	Stabilizer Ring (See Z400-SR)		68.00
◷ –TC	Neo-Loc Test Cap Gasket (2", 3", 4" NL Bottom Outlet Only)		26.00
–TS	Top Secured with Slotted Screws		59.00
–TSP	Trap Seal Protection Device (Size Matches Drain Outlet Selected, See Z1072)		POA
–U	1"-3" High Extension Adapter (See Z400-U)	D.C.	101.00
		Galv.	275.00
	For each additional 1" above 3"		104.00
–V	Backwater Valve (Not Available with -Y)		357.00
–VP	Vandal-Proof Secured Top		41.00
–Y	Sediment Bucket (Not Available with -V)		53.00
–90	90° Threaded Side Outlet Body Assembly (2" and 3" Only)		194.00

For additional product information, please visit www.zurn.ca

**Regularly furnished unless otherwise specified.*

◷ This symbol denotes a product that is engineered to reduce installation and rework time.

Z415 BODY ASSEMBLY WITH "TYPE J" HEEL-PROOF STRAINER

ENGINEERING SPECIFICATION

Zurn ZN415J floor and shower drain features Dura-Coated cast iron body with bottom outlet, combination invertible membrane clamp and adjustable collar with seepage slots, and "Type J" polished, nickel bronze rectangular light-duty, heel-proof strainer.

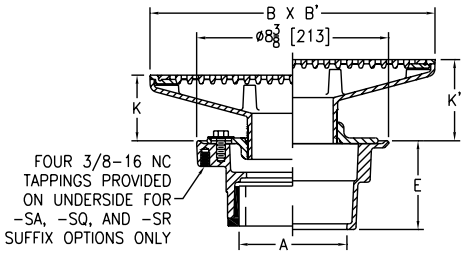

Strainer Designation	Dimensions in inches [mm]						Str. Open Area sq in [cm²]	Approximate Weight lb [kg]
	A Pipe Size	B Diameter	K		K'			
			Min.	Max.	Min.	Max.		
-8J	2 [51], 3 [76], 4 [102]	4-1/2 [114] x 8 [203]	1-3/8 [35]	2-5/8 [67]	2-1/8 [54]	3-3/8 [86]	12 [77]	13 [6]
-9J		5 [127] x 9 [229]	1-5/8 [41]	2-13/16 [71]	2-3/8 [60]	3-5/8 [92]	15 [97]	14 [6]
-13J	3 [76], 4 [102]	5-1/2 [140] x 13 [330]	2-3/32 [53]	3-5/16 [84]	2-13/16 [71]	4 [102]	20 [129]	18 [8]
-17J		5 [127] x 17 [432]	2-1/4 [57]				29 [187]	23 [10]
-21J		5 [127] x 21 [533]	2-5/16 [59]				32 [206]	27 [12]
-20J	6 [152]	10 [254] x 20 [508]	2-9/16 [65]	3-1/4 [83]	2-7/8 [73]		66 [426]	45 [20]

PREFIXES	DESCRIPTION	STRAINER DESIG.	PIPE SIZE	LIST PRICE
ZN415*	D.C.C.I. Body Assembly with Polished Nickel Bronze Top	-8J	2", 3", 4"	711.00
		-9J	2", 3", 4"	711.00
		-13J	3", 4"	762.00
		-17J	3", 4"	1,454.00
		-21J	3", 4"	2,170.00
		-20J	6"	7,810.00
ZB415	D.C.C.I. Body Assembly with Polished Bronze Top	-8J	2", 3", 4"	686.00
		-9J	2", 3", 4"	686.00
		-13J	3", 4"	733.00
		-17J	3", 4"	1,390.00
		-21J	3", 4"	2,068.00
		-20J	6"	7,920.00
Z415	D.C.C.I. Body Assembly ONLY (add "-L/Top" to product sku)	No Strainer	2", 3", 4"	158.00
			6"	448.00

OUTLETS (SPECIFY PIPE SIZE IN INCHES AND TYPE OF OUTLET)

OUTLET TYPE		PIPE SIZE/ OUTLET TYPE	E BODY HT. DIM.	ADD
IC	Inside Caulk	2IC, 3IC, 4IC	4-13/16"	N/C
IP	Threaded	2IP	2-7/16"	98.00
		3IP	2-3/4"	98.00
		4IP	2-13/16"	98.00
		6IP	2-7/8"	98.00
NH	No-Hub	2NH, 3NH, 4NH	3-13/16"	N/C
NL	Neo-Loc	2NL, 3NL, 4NL	3-7/8"	41.00

SUFFIXES			ADD
–AR	Acid Resisting Epoxy Coated Cast Iron		349.00
–G	Galvanized Cast Iron		173.00
–P	Trap Primer Connection (1/2"*)		22.00
◷ –SA	Stabilizer Assembly (See Z1035)		141.00
◷ –SQ	Stabilizer Q-deck (See Z1035-Q)		194.00
◷ –SR	Stabilizer Ring (See Z400-SR)		68.00
◷ –TC	Neo-Loc Test Cap Gasket (2", 3", 4" NL Bottom Outlet Only)		26.00
–U	1"-3" High Extension Adapter (See Z400-U)	D.C.	101.00
		Galv.	275.00
	For each additional 1" above 3"		101.00
–V	Backwater Valve (Not Available with -Y)		357.00
–VP	Vandal-Proof Secured Top		41.00
–Y	Sediment Bucket (Not Available with -V)		53.00
–90	90° Threaded Side Outlet Body Assembly (2" and 3" Only)		194.00

**Regularly furnished unless otherwise specified.*

◷ *This symbol denotes a product that is engineered to reduce installation and rework time.*

For additional product information, please visit www.zurn.ca

Z415 BODY ASSEMBLY WITH "TYPE K" STRAINER

ENGINEERING SPECIFICATION

Zurn ZN415K floor and shower drain features Dura-Coated cast iron body with bottom outlet, combination invertible membrane clamp and adjustable collar with seepage slots, and "Type K" polished, nickel bronze, angular, light-duty strainer.

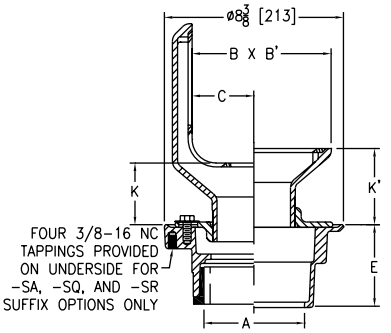

Strainer Designation	Dimensions in inches [mm]							Str. Open Area sq in [cm²]	Approximate Weight lb [kg]
	A Pipe Size	B x B'	C	K		K'			
				Min.	Max.	Min.	Max.		
-5K	2 [51], 3 [76], 4 [102]	3-3/4 [95] x 5 [127]	1-7/32 [31]	1 [25]	2 [51]	1-3/4 [44]	2-3/4 [70]	11 [71]	18 [8]
-7K		6-5/8 [143] x 7 [178]	2-15/16 [75]	2-3/16 [56]	3-3/8 [86]	2-7/8 [73]	4-1/8 [105]	29 [187]	25 [11]

PREFIXES	DESCRIPTION	STRAINER DESIG.	PIPE SIZE	LIST PRICE
ZN415*	D.C.C.I. Body Assembly with Polished Nickel Bronze Top	-5K	2", 3", 4"	1,231.00
		-7K	2", 3", 4"	1,301.00
ZB415	D.C.C.I. Body Assembly with Polished Bronze Top	-5K	2", 3", 4"	801.00
		-7K	2", 3", 4"	1,177.00
Z415	D.C.C.I. Body Assembly ONLY (add "-L/Top" to product sku)	No Strainer	2", 3", 4"	158.00

OUTLETS (SPECIFY PIPE SIZE IN INCHES AND TYPE OF OUTLET)				
OUTLET TYPE		PIPE SIZE/ OUTLET TYPE	E BODY HT. DIM.	ADD
IP	Threaded	2IP	2-7/16"	98.00
		3IP	2-3/4"	98.00
		4IP	2-13/16"	98.00
NH	No-Hub	2NH, 3NH, 4NH	3-13/16"	N/C
NL	Neo-Loc	2NL, 3NL, 4NL	3-7/8"	41.00

SUFFIXES			ADD
–AR	Acid Resisting Epoxy Coated Cast Iron		349.00
–G	Galvanized Cast Iron		173.00
–P	Trap Primer Connection (1/2"*)		22.00
◷ –SA	Stabilizer Assembly (See Z1035)		141.00
◷ –SQ	Stabilizer Q-Deck (See Z1035-Q)		194.00
◷ –SR	Stabilizer Ring (See Z400-SR)		68.00
◷ –TC	Neo-Loc Test Cap Gasket (2", 3", 4" NL Bottom Outlet Only)		26.00
–U	1"-3" High Extension Adapter (See Z400-U)	D.C.	101.00
		Galv.	275.00
	For each additional 1" above 3"		101.00
–V	Backwater Valve (Not Available with -Y)		357.00
–VP	Vandal-Proof Secured Top		41.00
–Y	Sediment Bucket (Not Available with -V)		53.00
–90	90° Threaded Side Outlet Body Assembly (2" and 3" Only)		194.00

For additional product information, please visit www.zurn.ca

**Regularly furnished unless otherwise specified.*

◷ This symbol denotes a product that is engineered to reduce installation and rework time.

Z415 BODY ASSEMBLY WITH "TYPE M" STRAINER AND SUR-SET BUCKET

ENGINEERING SPECIFICATION

Zurn ZN415M floor and shower drain features Dura-Coated cast iron body with bottom outlet, combination invertible membrane clamp and adjustable collar with seepage slots, and "Type M" polished nickel bronze strainer and Sur-Set bucket.

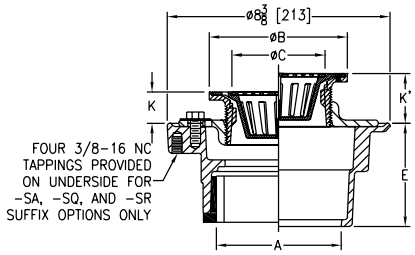

Strainer Designation	Dimensions in inches [mm]							Str. Open Area sq in [cm²]	Approximate Weight lb [kg]
	A Pipe Size	B Diameter	C	K		K'			
				Min.	Max.	Min.	Max.		
-5M	2 [51], 3 [76], 4 [102]	5 [127]	3-1/2 [89]	7/8 [22]	1-5/8 [41]	1-3/16 [30]	2-3/8 [60]	4-1/2 [29]	11 [5]

PREFIXES	DESCRIPTION	STRAINER DESIG.	PIPE SIZE	LIST PRICE
ZN415*	D.C.C.I. Body Assembly with Polished Nickel Bronze Top	-5M	2", 3", 4"	1,017.00
ZB415	D.C.C.I. Body Assembly with Polished Bronze Top	-5M	2", 3", 4"	965.00
Z415	D.C.C.I. Body Assembly ONLY (add "-L/Top" to product sku)	No Strainer	2", 3", 4"	158.00

OUTLETS (SPECIFY PIPE SIZE IN INCHES AND TYPE OF OUTLET)

OUTLET TYPE		PIPE SIZE/ OUTLET TYPE	E BODY HT. DIM.	ADD
IP	Threaded	2IP	2-7/16"	98.00
		3IP	2-3/4"	98.00
		4IP	2-13/16"	98.00
NH	No-Hub	2NH, 3NH, 4NH	3-13/16"	N/C
NL	Neo-Loc	2NL, 3NL, 4NL	3-7/8"	41.00

SUFFIXES			ADD
–G	Galvanized Cast Iron		173.00
–P	Trap Primer Connection (1/2"*)		22.00
⏲ –PC	Protective Cover		55.00
⏲ –SA	Stabilizer Assembly (See Z1035)		141.00
⏲ –SQ	Stabilizer Q-Deck (See Z1035-Q)		194.00
⏲ –SR	Stabilizer Ring (See Z400-SR)		68.00
⏲ –TC	Neo-Loc Test Cap Gasket (2", 3", 4" NL Bottom Outlet Only)		26.00
–U	1"-3" High Extension Adapter (See Z400-U)	D.C.	101.00
		Galv.	275.00
	For each additional 1" above 3"		101.00
–VP	Vandal-Proof Secured Top		41.00

**Regularly furnished unless otherwise specified.*

⏲ This symbol denotes a product that is engineered to reduce installation and rework time.

For additional product information, please visit www.zurn.ca

Z415 BODY ASSEMBLY WITH "TYPE N" STRAINER

ENGINEERING SPECIFICATION

Zurn Z415N floor and shower drain features Dura-Coated cast iron body with bottom outlet, combination invertible membrane clamp and adjustable collar with seepage slots, and "Type N" D.C.C.I. light-duty strainer with deep flanged grate.

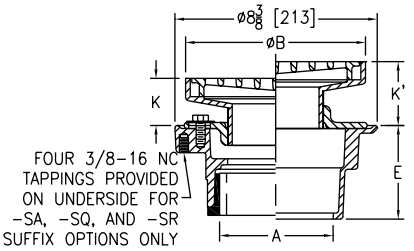

Strainer Designation	Dimensions in inches [mm]						Str. Open Area sq in [cm²]	Approximate Weight lb [kg]
	A Pipe Size	B Diameter	K		K'			
			Min.	Max.	Min.	Max.		
-7N	2 [51], 3 [76], 4 [102]	7 [178]	1-9/16 [40]	2-3/8 [60]	1-7/8 [48]	3-1/8 [79]	12 [77]	17 [8]
-9N	2 [51], 3 [76], 4 [102]	9 [229]	1-11/16 [43]	2-5/8 [67]	2-3/16 [56]	3-3/8 [86]	23 [148]	21 [10]
	6 [152]							23 [10]

PREFIXES	DESCRIPTION	STRAINER DESIG.	PIPE SIZE	LIST PRICE
Z415*	D.C.C.I. Body Assembly with Dura-Coated Top	-7N	2", 3", 4"	569.00
		-9N	2", 3", 4"	698.00
			6"	1,269.00
ZB415	D.C.C.I. Body Assembly with Polished Bronze Top	-7N	2", 3", 4"	1,075.00
		-9N	2", 3", 4"	1,504.00
			6"	2,075.00
ZN415	D.C.C.I. Body Assembly with Polished Nickel Bronze Top	-7N	2", 3", 4"	1,173.00
		-9N	2", 3", 4"	1,625.00
			6"	2,198.00
Z415	D.C.C.I. Body Assembly ONLY (add "-L/Top" to product sku)	No Strainer	2", 3", 4"	158.00
			2", 3", 4"	158.00
			6"	448.00

OUTLETS (SPECIFY PIPE SIZE IN INCHES AND TYPE OF OUTLET)

OUTLET TYPE		PIPE SIZE/ OUTLET TYPE	E BODY HT. DIM.	ADD
IP	Threaded	2IP	2-7/16"	98.00
		3IP	2-3/4"	98.00
		4IP	2-13/16"	98.00
		6IP	2-7/8"	98.00
NH	No-Hub	2NH, 3NH, 4NH	3-13/16"	N/C
NL	Neo-Loc	2NL, 3NL, 4NL	3-7/8"	41.00

SUFFIXES			ADD
–AR	Acid Resisting Epoxy Coated Cast Iron		349.00
–DG	Duresist Grate	7"	132.00
		9"	158.00
–G	Galvanized Cast Iron		173.00
–P	Trap Primer Connection (1/2"*)		22.00
◷ –SA	Stabilizer Assembly (See Z1035)		141.00
◷ –SQ	Stabilizer Q-Deck (See Z1035-Q)		194.00
◷ –SR	Stabilizer Ring (See Z400-SR)		68.00
◷ –TC	Neo-Loc Test Cap Gasket (2", 3", 4" NL Bottom Outlet Only)		26.00
–TS	Top Secured with Slotted Screws		59.00
–U	1"-3" High Extension Adapter (See Z400-U)	D.C.	101.00
		Galv.	275.00
	For each additional 1" above 3"		101.00
–V	Backwater Valve (Not Available with -Y)		357.00
–VP	Vandal-Proof Secured Top		41.00
–Y	Sediment Bucket (Not Available with -V)		53.00
–90	90° Threaded Side Outlet Body Assembly (2" and 3" Only)		194.00

For additional product information, please visit www.zurn.ca

**Regularly furnished unless otherwise specified.*

◷ *This symbol denotes a product that is engineered to reduce installation and rework time.*

ZN415-R FLOOR DRAIN WITH CIRCULAR ADJUSTABLE STRAINER WITH SURFACE CLAMP RING AND GRATE

ENGINEERING SPECIFICATION

Zurn ZN415-R Floor and Shower Drain features a Dura-Coated cast iron body with bottom outlet, combination invertible membrane clamp and adjustable collar with seepage holes, and "Type R" polished nickel bronze strainer (surface clamp ring and grate).

NOTES

For other available strainer variations see Z400 Strainer Series. Add price for required strainer to "BODY ONLY" price in chart. Specify type and size required.

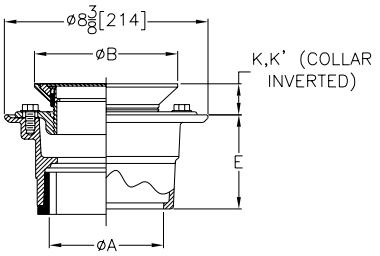

Strainer Designation	Dimensions in inches [mm]						Str. Open Area sq in [cm²]	Approximate Weight lb [kg]
	A Pipe Size	B Diameter	K		K'			
			Min.	Max.	Min.	Max.		
-6R	2 [51], 3 [76], 4 [102]	6 [152]	1-1/8 [29]	2-3/8 [60]	1-3/4 [44]	2-7/8 [73]	8 [52]	11 [5]
-9R	2 [51], 3 [76], 4 [102]	9 [229]					17 [110]	13 [6]

PREFIXES	DESCRIPTION	STRAINER DESIG.	PIPE SIZE	LIST PRICE
ZN415	D.C.C.I. Body Assembly with Polished Nickel Bronze Top	-6R	2", 3", 4"	668.00
		-9R	2", 3", 4"	1,102.00

OUTLETS (SPECIFY PIPE SIZE IN INCHES AND TYPE OF OUTLET)				
OUTLET TYPE		PIPE SIZE/OUTLET TYPE	E BODY HT. DIM.	ADD
IC	Inside Caulk	2IC, 3IC, 4IC	3-7/8" [98 mm]	N/C
IG	Inside Gasket	2IG, 3IG, 4IG	3-7/8" [98 mm]	41.00
IP	Threaded	2IP, 3IP, 4IP, 6IP	2-5/8" [67 mm]	98.00
NH	No-Hub	2NH, 3NH, 4NH	3-7/8" [98 mm]	N/C
		6NH (6IP with Z1040)	5-1/2" [140 mm]	354.00
NL	Neo-Loc	2NL, 3NL, 4NL	4-5/8" [117 mm]	41.00

SUFFIXES			ADD
–AR	Acid Resisting Epoxy Coated Cast Iron		349.00
–EF	3/8" [10 mm] Extension Frame		226.00
–FS	Floating Slab		457.00
–G	Galvanized Cast Iron		173.00
–P	Trap Primer Connection (Specify 1/2" [13 mm] or 3/4" [19 mm])		22.00
◷ –SA	Stabilizer Assembly (See Z1035)		141.00
◷ –SQ	Stabilizer Q-Deck (See Z1035-Q)		194.00
◷ –SR	Stabilizer Ring (See Z400-SR)		68.00
◷ –ST	Solid Top (6" [152 mm] Only)		178.00
◷ –TC	Neo-Loc Test Cap Gasket (2", 3", 4" NL Bottom Outlet Only)		26.00
–U	1"-3" [25 mm-76 mm] High Extension Adapter (See Z400-U)	D.C.	101.00
		Galv.	275.00
	For each additional 1" [25 mm] above 3" [76 mm]		101.00
–VP	Vandal-Proof Secured Top		41.00
–Y	Sediment Bucket (Not Available with -V)		53.00
–414	4" [102 mm] Diameter Nickel Bronze Funnel		240.00
–90	90° Threaded Side Outlet Body (2" [51 mm] and 3" [76 mm] Only)		194.00
	For Side Outlet Body Assembly Only		354.00

**Regularly furnished unless otherwise specified.*

◷ *This symbol denotes a product that is engineered to reduce installation and rework time.*

For additional product information, please visit www.zurn.ca

Z415 BODY ASSEMBLY WITH "TYPE S" STRAINER

ENGINEERING SPECIFICATION

Zurn ZN415S floor and shower drain features Dura-Coated cast iron body with bottom outlet, combination invertible membrane clamp and adjustable collar with seepage slots, and "Type S" polished, nickel bronze, square heel-proof, light-duty strainer.

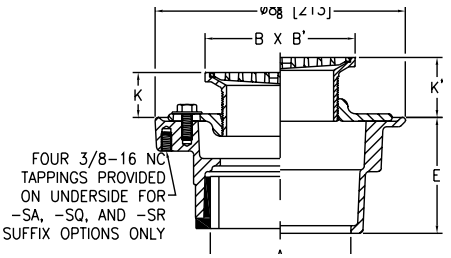

Strainer Designation	Dimensions in inches [mm]						Str. Open Area sq in [cm²]	Approximate Weight lb [kg]
	A Pipe Size	B x B' Strainer Top Size	K		K'			
			Min.	Max.	Min.	Max.		
-5S	2 [51], 3 [76]	5 x 5 [127]	1 [25]	1-19/32 [40]	1-1/4 [32]	2-3/8 [60]	19 [122]	12 [5]
-6S	2 [51], 3 [76], 4 [102]	6 x 6 [152]		1-27/32 [47]	1-13/32 [36]	2-19/32 [66]	13 [84]	13 [6]
-7S		7 x 7 [178]		1-7/8 [48]	1-3/8 [35]	2-5/8 [67]	21 [135]	14 [6]
-8S	3 [76], 4 [102]	8 x 8 [203]	1-3/32 [27]		1-3/4 [44]		28 [181]	15 [7]
-10S	6 [152]	10 x 10 [254]						21 [10]

PREFIXES	DESCRIPTION	STRAINER DESIG.	PIPE SIZE	LIST PRICE
ZN415*	D.C.C.I. Body Assembly with Polished Nickel Bronze Top	-5S	2", 3"	678.00
		-6S	2", 3", 4"	756.00
		-7S	2", 3", 4"	907.00
		-8S	3", 4"	1,095.00
		-10S	6"	2,313.00
ZB415	D.C.C.I. Body Assembly with Polished Bronze Top	-5S	2", 3"	622.00
		-6S	2", 3", 4"	714.00
		-7S	2", 3", 4"	849.00
		-8S	3", 4"	993.00
		-10S	6"	1,623.00
Z415	D.C.C.I. Body Assembly ONLY (add "-L/Top" to product sku)	No Strainer	2", 3", 4"	158.00
			6"	448.00

OUTLETS (SPECIFY PIPE SIZE IN INCHES AND TYPE OF OUTLET)				
OUTLET TYPE		PIPE SIZE/ OUTLET TYPE	E BODY HT. DIM.	ADD
IC	Inside Caulk	2IC, 3IC, 4IC	4-13/16"	N/C
IG	Inside Gasket	2IG, 3IG, 4IG	4-13/16"	41.00
IP	Threaded	2IP	2-7/16"	98.00
		3IP	2-3/4"	98.00
		4IP	2-13/16"	98.00
		6IP	2-7/8"	98.00
NH	No-Hub	2NH, 3NH, 4NH	3-13/16"	N/C
NL	Neo-Loc	2NL, 3NL, 4NL	3-7/8"	41.00

SUFFIXES			ADD
–AR	Acid Resisting Epoxy Coated Cast Iron		349.00
–CP	Chrome-Plated Bronze Top		29.00
–G	Galvanized Cast Iron		173.00
–HD	Heavy-Duty Grate (ZN 6" x 6" only)		215.00
–OF	Oval Funnel (6", 7", 8", 10" strainers only) (See Z329-7)		239.00
–P	Trap Primer Connection (1/2"*)		22.00
◷ –PC	Protective Cover		55.00
◷ –SA	Stabilizer Assembly (See Z1035)		141.00
◷ –SQ	Stabilizer Q-Deck (See Z1035-Q)		194.00
◷ –TC	Neo-Loc Test Cap Gasket (2", 3", 4" NL Bottom Outlet Only)		26.00
–U	1"-3" High Extension Adapter (See Z400-U)	D.C.	101.00
		Galv.	275.00
	For each additional 1" above 3"		101.00
–V	Backwater Valve (Not Available with -Y)		357.00
–VP	Vandal-Proof Secured Top		41.00
–Y	Sediment Bucket (Not Available with -V)		53.00
–4	4" Diameter Funnel (See Z328)		230.00
–90	90° Threaded Side Outlet Body Assembly (2" and 3" Only)		194.00

For additional product information, please visit www.zurn.ca

**Regularly furnished unless otherwise specified.*

◷ *This symbol denotes a product that is engineered to reduce installation and rework time.*

ZS415 BODY ASSEMBLY WITH "TYPE SS" STRAINER

ENGINEERING SPECIFICATION

Zurn ZS415SS floor and shower drain features Dura-Coated cast iron body with bottom outlet, combination invertible membrane clamp and adjustable collar with seepage slots, and "Type SS" heel-proof, stainless steel, medium-duty square strainer.

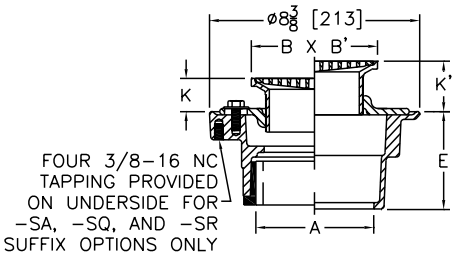

Strainer Designation	Dimensions in inches [mm]						Str. Open Area sq in [cm²]	Approximate Weight lb [kg]
	A Pipe Size	B x B' Strainer Top Size	K		K'			
			Min.	Max.	Min.	Max.		
-5SS	2 [51], 3 [76]	5 x 5 [127]	1 [25]	1-19/32 [40]	1-1/4 [32]	2-3/8 [60]	8-1/2 [55]	11 [5]
-6SS	2 [51], 3 [76], 4 [102]	6 x 6 [152]		1-27/32 [47]	1-13/32 [36]	2-19/32 [66]	13 [84]	12 [5]
-8SS	3 [76], 4 [102]	8 x 8 [203]	1-3/32 [27]	1-7/8 [48]	1-3/4 [44]	2-5/8 [67]	24-1/2 [158]	15 [7]

PREFIXES	DESCRIPTION	STRAINER DESIG.	PIPE SIZE	LIST PRICE
ZS415*	D.C.C.I. Body Assembly with Square Type 304 (CF8) Stainless Steel Top	-5SS	2", 3"	557.00
		-6SS	2", 3", 4"	572.00
		-8SS	3", 4"	1,106.00
ZM415	D.C.C.I. Body Assembly with Square Type 316 (CF8M) Stainless Steel Top	-5SS	2", 3"	POA
		-6SS	2", 3", 4"	1,485.00
		-8SS	3", 4"	3,245.00
Z415	D.C.C.I. Body Assembly ONLY (add "-L/Top" to product sku)	No Strainer	2", 3", 4"	158.00

OUTLETS (SPECIFY PIPE SIZE IN INCHES AND TYPE OF OUTLET)

OUTLET TYPE		PIPE SIZE/ OUTLET TYPE	E BODY HT. DIM.	ADD
IC	Inside Caulk	2IC, 3IC, 4IC	4-13/16"	N/C
IP	Threaded	2IP	2-7/16"	98.00
		3IP	2-3/4"	98.00
		4IP	2-13/16"	98.00
NH	No-Hub	2NH, 3NH, 4NH	3-13/16"	N/C
NL	Neo-Loc	2NL, 3NL, 4NL	3-7/8"	41.00

SUFFIXES			ADD
–AR	Acid Resisting Epoxy Coated Cast Iron		349.00
–G	Galvanized Cast Iron		173.00
–P	Trap Primer Connection (1/2"*)		22.00
⏲ –TC	Neo-Loc Test Cap Gasket (2", 3", 4" NL Bottom Outlet Only)		26.00
–U	1"-3" High Extension Adapter (See Z400-U)	D.C.	101.00
		Galv.	275.00
	For each additional 1" above 3"		101.00
–V	Backwater Valve (Not Available with -Y)		357.00
–VP	Vandal-Proof Secured Top		41.00
–Y	Sediment Bucket (Not Available with -V)		53.00

*Regularly furnished unless otherwise specified.

⏲ *This symbol denotes a product that is engineered to reduce installation and rework time.*

For additional product information, please visit www.zurn.ca

Z415 BODY ASSEMBLY WITH "TYPE SC" STRAINER

ENGINEERING SPECIFICATION

Zurn ZN415SC floor and shower drain features Dura-Coated cast iron body with bottom outlet, combination invertible membrane clamp, adjustable collar with seepage slots, and "Type SC" polished, nickel bronze strainer with flashing clamp device and adjustable strainer top with scoriated, hinged, light-duty cover.

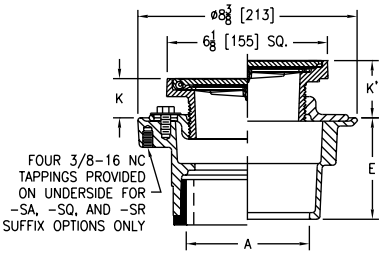

Strainer Designation	Dimensions in inches [mm]					Approximate Weight lb [kg]
	A Pipe Size	K		K'		
		Min.	Max.	Min.	Max.	
-6SC	2 [51], 3 [76], 4 [102]	1-3/16 [30]	1-15/16 [152]	1-3/4 [44]	2-7/8 [73]	16 [7]

PREFIXES	DESCRIPTION	STRAINER DESIG.	PIPE SIZE	LIST PRICE
ZN415*	D.C.C.I. Body Assembly with Polished Nickel Bronze Top	-6SC	2", 3", 4"	1,209.00
ZB415	D.C.C.I. Body Assembly with Polished Bronze Top	-6SC	2", 3", 4"	1,044.00
Z415	D.C.C.I. Body Assembly ONLY (add "-L/Top" to product sku)	No Strainer	2", 3", 4"	158.00

OUTLETS (SPECIFY PIPE SIZE IN INCHES AND TYPE OF OUTLET)				
OUTLET TYPE		PIPE SIZE/ OUTLET TYPE	E BODY HT. DIM.	ADD
NH	No-Hub	2NH, 3NH, 4NH	3-13/16"	N/C
NL	Neo-Loc	2NL, 3NL, 4NL	3-7/8"	41.00

SUFFIXES			ADD
–AR	Acid Resisting Epoxy Coated Cast Iron		349.00
-CP	Chrome-Plated Bronze Top		59.00
–G	Galvanized Cast Iron		173.00
–GC	Gasketed Cover		72.00
–LR	Lift Ring		235.00
–P	Trap Primer Connection (1/2"*)		22.00
◷ –SA	Stabilizer Assembly (See Z1035)		141.00
◷ –SQ	Stabilizer Q-deck (See Z1035-Q)		194.00
◷ –SR	Stabilizer Ring (See Z400-SR)		68.00
◷ –TC	Neo-Loc Test Cap Gasket (2", 3", 4" NL Bottom Outlet Only)		26.00
–TS	Top Secured with Slotted Screw		41.00
–U	1"-3" High Extension Adapter (See Z400-U)	D.C.	101.00
		Galv.	275.00
	For each additional 1" above 3"		101.00
–V	Backwater Valve (Not Available with -Y)		357.00
–VP	Vandal-Proof Secured Top		41.00
–Y	Sediment Bucket (Not Available with -V)		53.00

For additional product information, please visit www.zurn.ca

**Regularly furnished unless otherwise specified.*

◷ *This symbol denotes a product that is engineered to reduce installation and rework time.*

Z415 BODY ASSEMBLY WITH "TYPE SH" STRAINER

ENGINEERING SPECIFICATION

Zurn ZN415SH floor and shower drain features Dura-Coated cast iron body with bottom outlet, combination invertible membrane clamp and adjustable collar with seepage slots, and "Type SH" polished, nickel bronze, square, hinged, light-duty strainer.

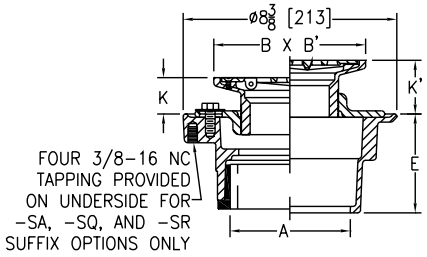

Strainer Designation	Dimensions in inches [mm]						Str. Open Area sq in [cm²]	Approximate Weight lb [kg]
	A Pipe Size	B x B' Strainer Top Size	K		K'			
			Min.	Max.	Min.	Max.		
-6SH	2 [51], 3 [76], 4 [102]	6 x 6 [152]	1 [25]	1-7/8 [48]	1-3/4 [44]	2-5/8 [67]	12 [77]	13 [6]
-8SH	2 [51], 3 [76], 4 [102]	8 x 8 [203]	1-5/32 [29]	2 [51]	2 [51]	3-3/4 [95]	21 [135]	17 [8]
	6 [152]							19 [9]

PREFIXES	DESCRIPTION	STRAINER DESIG.	PIPE SIZE	LIST PRICE
ZN415*	D.C.C.I. Body Assembly with Polished Nickel Bronze Top	-6SH	2", 3", 4"	919.00
		-8SH	2", 3", 4"	1,256.00
			6"	1,829.00
ZB415	D.C.C.I. Body Assembly with Polished Bronze Top	-6SH	2", 3", 4"	885.00
		-8SH	2", 3", 4"	1,158.00
			6"	1,729.00
Z415	D.C.C.I. Body Assembly ONLY (add "-L/Top" to product sku)	No Strainer	2", 3", 4"	158.00
			6"	448.00

OUTLETS (SPECIFY PIPE SIZE IN INCHES AND TYPE OF OUTLET)				
OUTLET TYPE		PIPE SIZE/ OUTLET TYPE	E BODY HT. DIM.	ADD
IP	Threaded	2IP	2-7/16"	98.00
		3IP	2-3/4"	98.00
		4IP	2-13/16"	98.00
		6IP	2-7/8"	98.00
NH	No-Hub	2NH, 3NH, 4NH	3-13/16"	N/C
NL	Neo-Loc	2NL, 3NL, 4NL	3-7/8"	41.00

SUFFIXES			ADD
–AR	Acid Resisting Epoxy Coated Cast Iron		349.00
–G	Galvanized Cast Iron		173.00
–P	Trap Primer Connection (1/2"*)		22.00
⏲ –SA	Stabilizer Assembly (See Z1035)		141.00
⏲ –SQ	Stabilizer Q-deck (See Z1035-Q)		194.00
⏲ –SR	Stabilizer Ring (See Z400-SR)		68.00
⏲ –TC	Neo-Loc Test Cap Gasket (2", 3", 4" NL Bottom Outlet Only)		26.00
–U	1"-3" High Extension Adapter (See Z400-U)	D.C.	101.00
		Galv.	275.00
	For each additional 1" above 3"		101.00
–V	Backwater Valve (Not Available with -Y)		357.00
–VP	Vandal-Proof Secured Top		41.00
–Y	Sediment Bucket (Not Available with -V)		53.00
–90	90° Threaded Side Outlet Body Assembly (2" and 3" Only)		194.00

*Regularly furnished unless otherwise specified.

⏲ *This symbol denotes a product that is engineered to reduce installation and rework time.*

For additional product information, please visit www.zurn.ca

Z415-U BODY ASSEMBLY WITH "TYPE U" HUB FUNNEL

ENGINEERING SPECIFICATION

Zurn ZN415-U Hub Floor Drain, Dura-Coated cast iron body with bottom outlet, combination invertible membrane clamp and adjustable collar with seepage holes, and "Type U" circular adjustable hub funnel (specify Dura-Coat or nickel bronze).

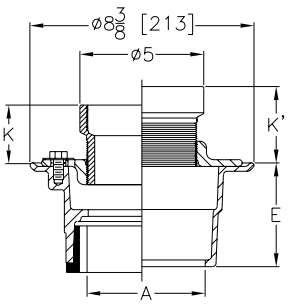

Strainer Designation	Dimensions in inches [mm]					Approximate Weight lb [kg]
	A Pipe Size	K		K'		
		Min.	Max.	Min.	Max.	
-5U	2 [51], 3 [76], 4 [102]	1-3/8 [35]	2-1/2 [64]	2-1/4 [57]	3-3/8 [86]	10 [5]
	6 [152]					

PREFIXES	DESCRIPTION	PIPE SIZE	LIST PRICE
ZN415-U*	D.C.C.I. Body Assembly with Polished Nickel Bronze Top	2", 3", 4"	699.00
		6"	717.00
Z415-U	D.C.C.I. Body Assembly	2", 3", 4"	253.00
		6"	543.00

OUTLETS (SPECIFY PIPE SIZE IN INCHES AND TYPE OF OUTLET)

OUTLET TYPE		PIPE SIZE/ OUTLET TYPE	E BODY HT. DIM.	ADD
IC	Inside Caulk	2IC, 3IC, 4IC	3-7/8" [98 mm]	N/C
IG	Inside Gasket	2IG, 3IG, 4IG	3-7/8" [98 mm]	N/C
IP	Threaded	2IP, 3IP, 4IP, 6IP	2-5/8" [67 mm]	98.00
NH	No-Hub	2NH, 3NH, 4NH	3-7/8" [98 mm]	N/C
		6NH (6IP with Z1040)	5-1/2" [140 mm]	N/C
NL	Neo-Loc	2NL, 3NL, 4NL	4-5/8" [117 mm]	41.00

SUFFIXES			ADD
–AR	Acid Resisting Epoxy Coated Cast Iron		350.00
–FS	Floating Slab		457.00
–G	Galvanized Cast Iron		173.00
–P	1/2" [13 mm] Trap Primer Connection		22.00
◷ –SR	Stabilizer Ring (See Z400-SR)		68.00
–U	1"-3" [25 mm-76 mm] High Extension Adapter (See Z400-U)	D.C.	101.00
		Galv.	275.00
	For each additional 1" [25 mm] above 3" [76 mm]		101.00
–VP	Vandal-Proof Secured Top		41.00
–Y	Sediment Bucket (Not Available with -V)		53.00
–90	90° Threaded Side Outlet Body Assembly (2" [51 mm] and 3" [76 mm] Only)		194.00

For additional product information, please visit www.zurn.ca

**Regularly furnished unless otherwise specified.*

◷ This symbol denotes a product that is engineered to reduce installation and rework time.

ZN415-Y FLOOR DRAIN WITH NICKEL BRONZE SQUARE STRAINER

ENGINEERING SPECIFICATION

Zurn ZN415-Y Floor and Shower Drain features a Dura-Coated cast iron body with bottom outlet, combination invertible membrane clamp and adjustable collar with seepage holes, and "Type Y" polished nickel bronze square strainer.

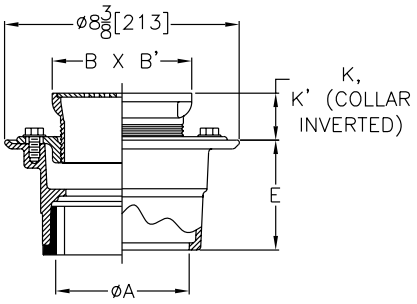

Strainer Designation	Dimensions in inches [mm]						Str. Open Area sq in [cm²]	Approximate Weight lb [kg]
	A Pipe Size	B x B' Strainer Top Size	K		K'			
			Min.	Max.	Min.	Max.		
-5Y	2 [51], 3 [76], 4 [102]	5 x 5 [127]	1-1/4 [32]	2-1/8 [54]	2 [51]	2-7/8 [73]	9 [58]	10 [5]
-6Y	2 [51], 3 [76], 4 [102]	6 x 6 [152]					12 [77]	

PREFIXES	DESCRIPTION	STRAINER DESIG.	PIPE SIZE	LIST PRICE
ZN415*	D.C.C.I. Body Assembly with Polished Nickel Bronze Top	-5Y	2", 3", 4"	471.00
		-6Y	2", 3", 4"	696.00

OUTLETS (SPECIFY PIPE SIZE IN INCHES AND TYPE OF OUTLET)

OUTLET TYPE		PIPE SIZE/OUTLET TYPE	E BODY HT. DIM.	ADD
IC	Inside Caulk	2IC, 3IC, 4IC	3-7/8" [98 mm]	N/C
IG	Inside Gasket	2IG, 3IG, 4IG	3-7/8" [98 mm]	41.00
IP	Threaded	2IP, 3IP, 4IP	2-3/8" [60 mm]	98.00
NH	No-Hub	2NH, 3NH, 4NH	3-7/8" [98 mm]	N/C
NL	Neo-Loc	2NL, 3NL, 4NL	3-3/4" [95 mm]	41.00

SUFFIXES			ADD
–AR	Acid Resisting Epoxy Coated Cast Iron		350.00
–FS	Floating Slab		457.00
–G	Galvanized Cast Iron		173.00
–P	1/2" [13 mm] Trap Primer Connection		22.00
◷ –SA	Stabilizer Assembly (See Z1035)		141.00
◷ –SQ	Stabilizer Q-Deck (See Z1035-Q)		194.00
◷ –SR	Stabilizer Ring (See Z400-SR)		68.00
◷ –TC	Neo-Loc Test Cap Gasket (2", 3", 4" NL Bottom Outlet Only)		26.00
–U	1"-3" [25 mm-76 mm] High Extension Adapter (See Z400-U)	D.C.	101.00
		Galv.	275.00
	For each additional 1" [25 mm] above 3" [76 mm]		101.00
–VP	Vandal-Proof Secured Top		41.00
–Y	Sediment Bucket (Not Available with -V)		53.00
–414	4" [102 mm] Diameter Nickel Bronze Funnel		240.00
–90	90° Threaded Side Outlet Body (2" [51 mm] and 3" [76 mm] Only)		194.00
	For Side Outlet Body Assembly Only		354.00

**Regularly furnished unless otherwise specified.*

◷ This symbol denotes a product that is engineered to reduce installation and rework time.

For additional product information, please visit www.zurn.ca

ZX(N)415-Y8 FLOOR DRAIN WITH HEAVY-DUTY SQUARE ADJUSTABLE CAST IRON STRAINER

ENGINEERING SPECIFICATION

Zurn ZN415-Y8 Floor and Shower Drain features a Dura-Coated cast iron body with bottom outlet, combination invertible membrane clamp and adjustable collar with seepage holes, and "Type Y8" heavy-duty Dura-Coated cast iron strainer.

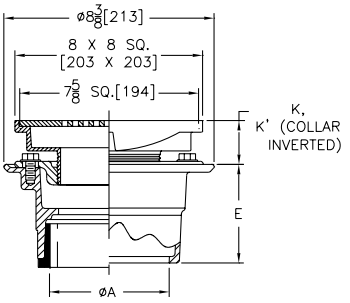

Strainer Designation	Dimensions in inches [mm]				Str. Open Area sq in [cm²]	Approximate Weight lb [kg]
	A Pipe Size	B x B' Strainer Top Size	K			
			Min.	Max.		
-Y8	2 [51], 3 [76], 4 [102]	8 x 8 [204]	2-3/8 [60]	3-1/2 [89]	26 [168]	14 [6]

PREFIXES	DESCRIPTION	STRAINER DESIG.	PIPE SIZE	LIST PRICE
ZX415*	D.C.C.I. Body Assembly with Heavy-Duty Dura-Coated Cast Iron Top	-Y8	2", 3", 4"	437.00
ZXN415*	D.C.C.I. Body Assembly with Polished Nickel Bronze Top	-Y8	2", 3", 4"	868.00
Z415	D.C.C.I. Body Assembly ONLY (add "-L/Top" to product sku)	No Strainer	2", 3", 4"	158.00
			6"	448.00

OUTLETS (SPECIFY PIPE SIZE IN INCHES AND TYPE OF OUTLET)				
OUTLET TYPE		PIPE SIZE/OUTLET TYPE	E BODY HT. DIM.	ADD
IC	Inside Caulk	2IC, 3IC, 4IC	3-7/8" [98 mm]	N/C
IG	Inside Gasket	2IG, 3IG, 4IG	3-7/8" [98 mm]	41.00
IP	Threaded	2IP, 3IP, 4IP, 6IP	2-5/8" [67 mm]	98.00
NH	No-Hub	2NH, 3NH, 4NH	3-7/8" [98 mm]	N/C
		6NH (6IP with Z1040)	5-1/2" [140 mm]	354.00
NL	Neo-Loc	2NL, 3NL, 4NL	4-5/8" [117 mm]	41.00

SUFFIXES			ADD
–AR	Acid Resisting Epoxy Coated Cast Iron		350.00
–FS	Floating Slab		457.00
–G	Galvanized Cast Iron		173.00
–P	1/2" [13 mm] Trap Primer Connection		22.00
◷ –SA	Stabilizer Assembly (See Z1035)		141.00
◷ –SQ	Stabilizer Q-Deck (See Z1035-Q)		194.00
◷ –SR	Stabilizer Ring (See Z400-SR)		68.00
◷ –TC	Neo-Loc Test Cap Gasket (2", 3", 4" NL Bottom Outlet Only)		26.00
–U	1"-3" [25 mm-76 mm] High Extension Adapter (See Z400-U)	D.C.	101.00
		Galv.	275.00
	For each additional 1" [25 mm] above 3" [76 mm]		101.00
–VP	Vandal-Proof Secured Top		41.00
–Y	Sediment Bucket (Not Available with -V)		53.00
–414	4" [102 mm] Diameter Nickel Bronze Funnel		240.00
–90	90° Threaded Side Outlet Body (2" [51 mm] and 3" [76 mm] Only)		194.00
	For Side Outlet Body Assembly Only		354.00

For additional product information, please visit www.zurn.ca

**Regularly furnished unless otherwise specified.*

◷ *This symbol denotes a product that is engineered to reduce installation and rework time.*

Z420 DEEP SHANK FLOOR AND SHOWER DRAIN FOR MARBLE AND GRANITE APPLICATIONS

ENGINEERING SPECIFICATION

Zurn ZN420 deep shank floor and shower drain features white acid resisting coated cast iron body and invertible membrane clamp with seepage slots, polished nickel bronze adjustable head with 2" [51 mm] N.P.S.M. shank, and 4" [102 mm] diameter round, secured strainer.

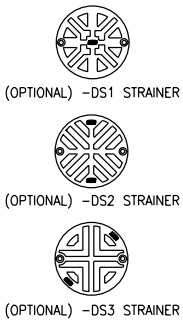

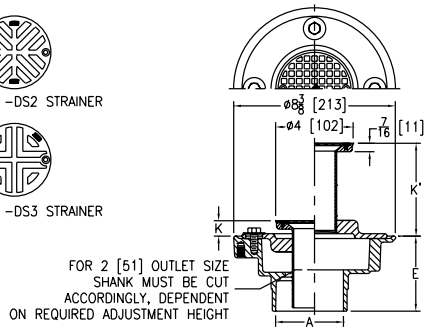

Dimensions in inches [mm]					Str. Open Area sq in [cm²]	Approximate Weight lb [kg]
A Pipe Size	K		K'			
	Min.	Max.	Min.	Max.		
2 [51], 3 [76], 4 [102]	13/16 [21]	3-3/4 [95]	1-1/4 [32]	4-13/16 [122]	5 [32]	15 [7]
6 [152]						13 [6]

PREFIXES	DESCRIPTION	PIPE SIZE	LIST PRICE
ZN420*	White A.R.C. Cast Iron Body and Collar with Polished Nickel Bronze Top	2", 3", 4"	702.00
		6"	1,961.00
ZB420	White A.R.C. Cast Iron Body and Collar with Polished Bronze Top	2", 3", 4"	667.00
		6"	1,733.00

OUTLETS (SPECIFY PIPE SIZE IN INCHES AND TYPE OF OUTLET)

OUTLET TYPE		PIPE SIZE/ OUTLET TYPE	E BODY HT. DIM.	ADD
IC	Inside Caulk	2IC, 3IC, 4IC	4-13/16"	N/C
IP	Threaded	2IP	2-7/16"	98.00
		3IP	2-3/4"	98.00
		4IP	2-13/16"	98.00
		6IP	2-7/8"	98.00
NH	No-Hub	2NH, 3NH, 4NH	3-13/16"	N/C
NL	Neo-Loc	2NL, 3NL, 4NL	3-7/8"	41.00

SUFFIXES		ADD
–DS1	Decorative Strainer	N/C
–DS2	Decorative Strainer	N/C
–DS3	Decorative Strainer	N/C
–G	Galvanized Cast Iron	173.00
–P	Trap Primer Connection (1/2"*)	22.00
◷ –SA	Stabilizer Assembly (See Z1035)	141.00
◷ –SQ	Stabilizer Q-deck (See Z1035-Q)	194.00
◷ –SR	Stabilizer Ring (See Z400-SR)	68.00
◷ –TC	Neo-Loc Test Cap Gasket (2", 3", 4" NL Bottom Outlet Only)	26.00
–VP	Vandal-Proof Secured Top	41.00

-DS1 Option

-DS2 Option

-DS3 Option

*Regularly furnished unless otherwise specified.

◷ *This symbol denotes a product that is engineered to reduce installation and rework time.*

For additional product information, please visit www.zurn.ca

Z450 DRUM TRAP DRAIN WITH "TYPE B" STRAINER

ENGINEERING SPECIFICATION

Zurn ZN450B drum trap floor and shower drain features Dura-Coated cast iron body with integral trap, side outlet, seepage pan, and adjustable "Type B" polished, nickel bronze strainer.

NOTES

For other available strainer variations, see our Z400 Strainer Series. Add price for required strainer to "BODY ONLY" price in chart. Specify strainer designation required.

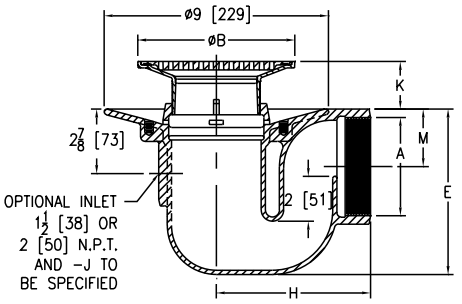

Strainer Designation	Dimensions in inches [mm]								Str. Open Area sq in [cm²]	Approximate Weight lb [kg]
	A Pipe Size	B Diameter	H		K		M			
			IP	NH	Min.	Max.	IP	NH		
-5B	2 [51]	5 [127]	6-1/16 [154]	11 [279]	7/8 [22]	2 [51]	1-15/32 [37]	2 [51]	8 [52]	18 [8]
	3 [76]		6-7/16 [164]				2-3/32 [53]	2-9/16 [65]		
	4 [102]		6-7/8 [175]				2-19/32 [66]	2-19/32 [66]		
-6B	2 [51]	6 [152]	6-1/16 [154]		1-1/8 [29]	2-1/4 [57]	1-15/32 [37]	2 [51]	9 [58]	19 [9]
	3 [76]		6-7/16 [164]				2-3/32 [53]	2-9/16 [65]		
	4 [102]		6-7/8 [175]				2-19/32 [66]	2-19/32 [66]		
-8B	2 [51]	8 [203]	6-1/16 [154]		1-1/2 [38]	2-5/8 [67]	1-15/32 [37]	2 [51]	18 [116]	33 [15]
	3 [76]		6-7/16 [164]				2-3/32 [53]	2-9/16 [65]		
	4 [102]		6-7/8 [175]				2-19/32 [66]	2-19/32 [66]		

PREFIXES	DESCRIPTION	STRAINER DESIG.	PIPE SIZE	LIST PRICE
ZN450B*	D.C.C.I. Body Assembly with Polished Nickel Bronze Top	-5B	2", 3"	1,023.00
			4"	1,346.00
		-6B	2", 3"	1,119.00
			4"	1,445.00
		-8B	2", 3"	1,507.00
			4"	1,784.00
ZB450B	D.C.C.I. Body Assembly with Polished Bronze Top	-5B	2", 3"	1,023.00
			4"	1,346.00
		-6B	2", 3"	1,119.00
			4"	1,445.00
		-8B	2", 3"	1,507.00
			4"	1,782.00
Z450	D.C.C.I. Body Assembly ONLY (add "-L/Top" to product sku)	No Strainer	2", 3"	841.00
			4"	1,164.00

OUTLETS (SPECIFY PIPE SIZE IN INCHES AND TYPE OF OUTLET)				
OUTLET TYPE		PIPE SIZE/ OUTLET TYPE	E BODY HT. DIM.	ADD
IP	Threaded	2IP, 3IP	6-17/32"	N/C
		4IP	7-7/16"	N/C
NH	No-Hub	2NH, 3NH	7-7/16"	N/C
		4NH	7-7/16"	N/C

SUFFIXES			ADD
–C	Clamp Collar		N/C
–G	Galvanized Cast Iron		272.00
–P	Trap Primer Connection (1/2"*)		22.00
⏲ –PC	Protective Cover		55.00
–U	1"-3" High Extension Adapter (See Z400-U)	D.C.	104.00
		Galv.	275.00
	For each additional 1" above 3"		104.00
–V	Backwater Valve (Not Available with -Y) (Ball Float Type)		798.00
–VP	Vandal-Proof Secured Top		41.00
–Y	Sediment Bucket (Not Available with -V)		53.00

For additional product information, please visit www.zurn.ca

**Regularly furnished unless otherwise specified.*

⏲ *This symbol denotes a product that is engineered to reduce installation and rework time.*

Z451 SHALLOW TRAP DRAIN WITH "TYPE B" STRAINER

ENGINEERING SPECIFICATION

Zurn ZN451B Shallow trap floor and shower drain features Dura-Coated cast iron body with bottom outlet, combination invertible membrane clamp and adjustable collar with seepage slots, adjustable "Type B" polished, nickel bronze, heel-proof strainer, and cast iron shallow trap body with 2" [51 mm] or 3" [76 mm] waterway and threaded side outlet.

NOTES

For other available strainer variations, see our Z400 Strainer Series. Add price for required strainer to "BODY ONLY" price in chart. Specify strainer designation required.

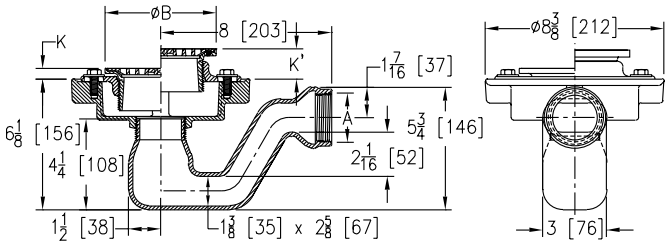

-2IP Option Shown

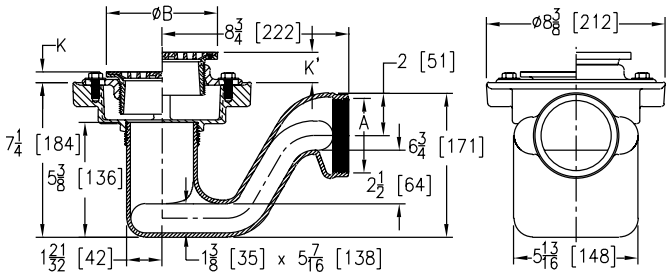

-3IP Option Shown

Strainer Designation	Dimensions in inches [mm]						Str. Open Area sq in [cm²]	Approximate Weight lb [kg]
	A Pipe Size	B Diameter	K		K'			
			Min.	Max.	Min.	Max.		
-5B	2 [51], 3 [76]	5 [127]	1 [25]	1-1/2 [38]	1-3/32 [27]	2-1/4 [57]	8 [52]	15 [7]
-6B		6 [152]		1-25/32 [45]	1-13/32 [36]	2-17/32 [64]	9 [58]	18 [8]
-7B		7 [178]		2-1/8 [54]	1-23/32 [44]	2-7/8 [73]	12 [77]	20 [9]
-8B	3 [76]	8 [203]	1-5/32 [29]		1-3/4 [44]		18 [116]	21 [10]

PREFIXES	DESCRIPTION	STRAINER DESIG.	PIPE SIZE	LIST PRICE
ZN451B*	D.C.C.I. Body Assembly with Polished Nickel Bronze Top	-5B	2", 3"	824.00
		-6B	2", 3"	935.00
		-7B	2", 3"	1,031.00
		-8B	3"	1,209.00
ZB451B	D.C.C.I. Body Assembly with Polished Bronze Top	-5B	2", 3"	798.00
		-6B	2", 3"	877.00
		-7B	2", 3"	993.00
		-8B	3"	1,162.00
Z451	D.C.C.I. Body Assembly ONLY (add "-L/Top" to product sku)	No Strainer	2", 3"	519.00

OUTLETS (SPECIFY PIPE SIZE IN INCHES AND TYPE OF OUTLET)				
OUTLET TYPE		PIPE SIZE/ OUTLET TYPE	E BODY HT. DIM.	ADD
IP	Threaded	2IP, 3IP	6-17/32"	N/C

SUFFIXES			ADD
–CP	Chrome-Plated Bronze Top		29.00
–G	Galvanized Cast Iron		173.00
–P	Trap Primer Connection (1/2"*)		22.00
⏲ –PC	Protective Cover		55.00
–U	1"-3" High Extension Adapter (See Z400-U)	D.C.	104.00
		Galv.	275.00
	For each additional 1" above 3"		104.00
–V	Backwater Valve (Not Available with -Y)		357.00
–VP	Vandal-Proof Secured Top		41.00
–Y	Sediment Bucket (Not Available with -V)		53.00

*Regularly furnished unless otherwise specified.

⏲ *This symbol denotes a product that is engineered to reduce installation and rework time.*

For additional product information, please visit www.zurn.ca

Z453 DEEP SEAL TRAP DRAIN WITH "TYPE B" STRAINER

ENGINEERING SPECIFICATION

Zurn ZN453B deep seal trap floor and shower drain features Dura-Coated cast iron body with uniform diameter integral trap, side outlet, seepage pan, and adjustable "Type B" polished, nickel bronze light-duty strainer.

NOTES

For other available strainer variations, see our Z400 Strainer Series. Add price for required strainer to "BODY ONLY" price in chart. Specify strainer designation required.

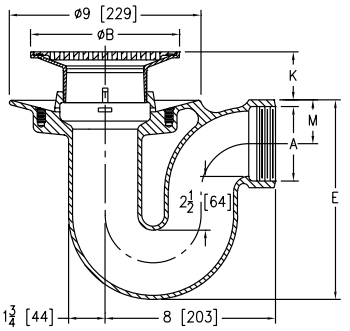

Strainer Designation	Dimensions in inches [mm]					Str. Open Area sq in [cm²]	Approximate Weight lb [kg]
	A Pipe Size	B Diameter	K		M		
			Min.	Max.			
-5B	2 [51], 3 [76]	5 [127]	3/4 [19]	1-7/8 [48]	2-1/8 [54]	8 [52]	30 [14]
	4 [102]						
-6B	2 [51], 3 [76]	6 [152]	1-1/8 [29]	2-1/8 [54]		9 [58]	31 [14]
	4 [102]						32 [15]
-7B	2 [51], 3 [76]	7 [178]	1-3/8 [35]	2-1/2 [64]		12 [77]	33 [15]
	4 [102]						
-8B	4 [102]	8 [203]				18 [116]	

PREFIXES	DESCRIPTION	STRAINER DESIG.	PIPE SIZE	LIST PRICE
ZN453B*	D.C.C.I. Body Assembly with Polished Nickel Bronze Top	-5B	2", 3"	1,102.00
			4"	1,471.00
		-6B	2", 3"	1,197.00
			4"	1,566.00
		-7B	2", 3"	1,334.00
			4"	1,701.00
		-8B	4"	1,902.00
ZB453B	D.C.C.I. Body Assembly with Polished Bronze Top	-5B	2", 3"	1,102.00
			4"	1,471.00
		-6B	2", 3"	1,197.00
			4"	1,566.00
		-7B	2", 3"	1,334.00
			4"	1,701.00
		-8B	4"	1,902.00
Z453	D.C.C.I. Body Assembly ONLY (add "-L/Top" to product sku)	No Strainer	2", 3"	917.00
			4"	1,285.00

OUTLETS (SPECIFY PIPE SIZE IN INCHES AND TYPE OF OUTLET)				
OUTLET TYPE		PIPE SIZE/ OUTLET TYPE	E BODY HT. DIM.	ADD
IP	Threaded	2IP, 3IP, 4IP	9-3/8"	N/C
NH	No-Hub	2NH, 3NH, 4NH	9-3/8"	N/C

SUFFIXES		ADD
–C	Clamp Collar	N/C
–P	Trap Primer Connection (1/2"*)	22.00
◷ –PC	Protective Cover	55.00
–U	1"-3" High Extension Adapter (See Z400-U) D.C.	104.00
	For each additional 1" above 3"	104.00
–VP	Vandal-Proof Secured Top	41.00
–Y	Sediment Bucket	53.00

For additional product information, please visit www.zurn.ca

**Regularly furnished unless otherwise specified.*

◷ *This symbol denotes a product that is engineered to reduce installation and rework time.*

Z455 TRAP DRAIN WITH FLOOR CLEANOUT WITH "TYPE B" STRAINER

ENGINEERING SPECIFICATION

Zurn ZN455B floor and shower trap drain features Dura-Coated cast iron body with integral trap, side outlet, seepage pan, floor level cleanout, and adjustable "Type B" polished, nickel bronze, light-duty strainer.

NOTES

For other available strainer variations, see our Z400 Strainer Series. Add price for required strainer to "BODY ONLY" price in chart. Specify strainer designation required.

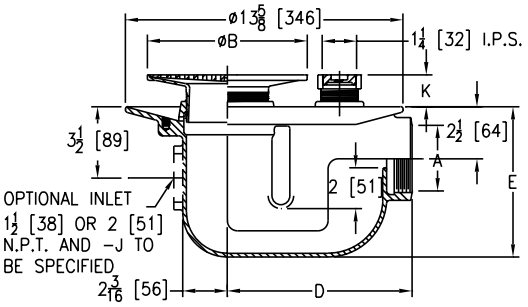

Strainer Designation	Dimensions in inches [mm]				Str. Open Area sq in [cm²]	Approximate Weight lb [kg]
	A Pipe Size	B Diameter	K			
			Min.	Max.		
-5B	2 [51], 3 [76], 4 [102]	5 [127]	7/8 [22]	2 [51]	8 [52]	37 [17]
-6B		6 [152]	1-1/8 [29]	2-1/4 [57]	9 [58]	39 [18]
-7B		7 [178]	1-1/2 [38]	2-5/8 [67]	12 [77]	41 [19]
-8B		8 [203]			18 [116]	43 [20]

PREFIXES	DESCRIPTION	STRAINER DESIG.	PIPE SIZE	LIST PRICE
ZN455B*	D.C.C.I. Body Assembly with Polished Nickel Bronze Top	-5B	2", 3", 4"	2,896.00
		-6B	2", 3", 4"	2,989.00
		-7B	2", 3", 4"	3,127.00
		-8B	2", 3", 4"	3,331.00
Z455	D.C.C.I. Body Assembly ONLY (add "-L/Top" to product sku)	No Strainer	2", 3", 4"	2,710.00

OUTLETS (SPECIFY PIPE SIZE IN INCHES AND TYPE OF OUTLET)

OUTLET TYPE		PIPE SIZE/ OUTLET TYPE	E BODY HT. DIM.	ADD
IP	Threaded	2IP, 3IP	7-3/8"	N/C
		4IP	7-3/8"	N/C
NH	No-Hub	2NH, 3NH, 4NH	7-3/8"	N/C

SUFFIXES		ADD
–C	Clamping Collar	N/C
-FC	Flush Cover for Plug	182.00
–P	Trap Primer Connection (1/2"*)	22.00
◷ –PC	Protective Cover	55.00
–V	Backwater Valve-Ball Float Type (Not Available with -Y)	798.00
–VP	Vandal-Proof Secured Top	41.00
–Y	Sediment Bucket (Not Available with -V)	53.00

**Regularly furnished unless otherwise specified.*

◷ This symbol denotes a product that is engineered to reduce installation and rework time.

For additional product information, please visit www.zurn.ca

Z456 DEEP SEAL TRAP DRAIN WITH FLOOR CLEANOUT AND CLAMP COLLAR WITH "TYPE B" STRAINER

ENGINEERING SPECIFICATION

Zurn ZN456B floor and shower drain features Dura-Coated cast iron body, deep seal integral trap with clamp collar, seepage pan, floor level cleanout, and adjustable "Type B" polished, nickel bronze strainer.

NOTES

For other available strainer variations, see our Z400 Strainer Series. Add price for required strainer to "BODY ONLY" price in chart. Specify strainer designation required.

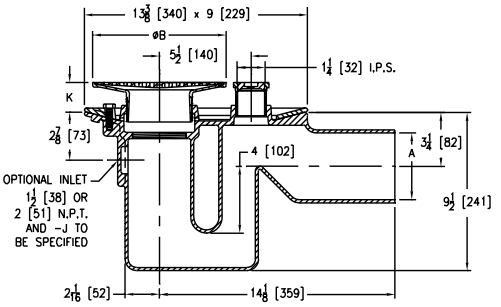

Strainer Designation	Dimensions in inches [mm]				Str. Open Area sq in [cm²]	Approximate Weight lb [kg]
	A Pipe Size	B Diameter	K			
			Min.	Max.		
-5B	2 [51], 3 [76], 4 [102]	5 [127]	1-1/4 [32]	2 [51]	8 [52]	41 [19]
-6B		6 [152]	1-1/8 [29]	2-1/4 [57]	9 [58]	43 [20]
-7B		7 [178]	1-1/2 [38]	2-5/8 [67]	12 [77]	45 [20]
-8B		8 [203]			18 [116]	47 [21]

PREFIXES	DESCRIPTION	STRAINER DESIG.	PIPE SIZE	LIST PRICE
ZN456B*	D.C.C.I. Body Assembly with Polished Nickel Bronze Top	-5B	2", 3", 4"	2,844.00
		-6B	2", 3", 4"	2,934.00
		-7B	2", 3", 4"	3,069.00
		-8B	2", 3", 4"	3,270.00
Z456	D.C.C.I. Body Assembly ONLY (add "-L/Top" to product sku)	No Strainer	2", 3", 4"	2,662.00

OUTLETS (SPECIFY PIPE SIZE IN INCHES AND TYPE OF OUTLET)			
OUTLET TYPE		PIPE SIZE/OUTLET TYPE	ADD
NH	No-Hub	2NH, 3NH, 4NH	N/C

SUFFIXES		ADD
–AR	Acid Resisting Epoxy Coated Cast Iron	POA
–G	Galvanized Cast Iron	514.00
–P	Trap Primer Connection (1/2"*)	22.00
⏲ –PC	Protective Cover	55.00
–V	Backwater Valve-Ball Float Type (Not Available with -Y)	798.00
–VP	Vandal-Proof Secured Top	41.00
–Y	Sediment Bucket (Not Available with -V)	53.00

For additional product information, please visit www.zurn.ca

**Regularly furnished unless otherwise specified.*

⏲ *This symbol denotes a product that is engineered to reduce installation and rework time.*

Z460B SHALLOW BODY FLOOR DRAIN WITH SIDE OUTLET AND "TYPE B" STRAINER

ENGINEERING SPECIFICATION

Zurn ZN460B shallow body floor and shower drain features Dura-Coated cast iron body with side outlet, seepage slots, and integral threaded connection for "Type B" polished nickel bronze light-duty strainer.

NOTES

For other available strainer variations, see our Z400 Strainer Series. Add price for required strainer to "BODY ONLY" price in chart. Specify strainer designation required.

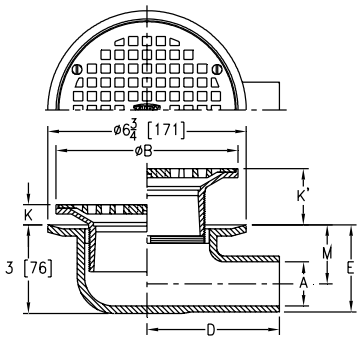

Strainer Designation	Dimensions in inches [mm]					Str. Open Area sq in [cm²]	Approximate Weight lb [kg]
	A Pipe Size	B Diameter	K Min.	K Max.	M		
-5B	1-1/2 [38]	5 [127]	15/32 [12]	1-5/8 [41]	2 [51]	8 [52]	8 [4]
	2 [51]				1-25/32 [45]		
-6B	1-1/2 [38]	6 [152]	11/16 [17]	1-29/32 [48]	2 [51]	9 [58]	9 [4]
	2 [51]				1-25/32 [45]		
-7B	1-1/2 [38]	7 [178]	1 [25]	2-1/4 [57]	2 [51]	12 [77]	10 [5]
	2 [51]				1-25/32 [45]		

PREFIXES	DESCRIPTION	STRAINER DESIG.	PIPE SIZE	LIST PRICE
ZN460B*	D.C.C.I. Body Assembly with Polished Nickel Bronze Top	-5B	1-1/2", 2"	514.00
		-6B	1-1/2", 2"	514.00
		-7B	1-1/2", 2"	514.00
ZB460B	D.C.C.I. Body Assembly with Polished Bronze Top	-5B	1-1/2", 2"	517.00
		-6B	1-1/2", 2"	517.00
		-7B	1-1/2", 2"	517.00
Z460	D.C.C.I. Body Assembly ONLY (add "-L/Top" to product sku)	No Strainer	1-1/2", 2"	322.00

OUTLETS (SPECIFY PIPE SIZE IN INCHES AND TYPE OF OUTLET)				
OUTLET TYPE		PIPE SIZE/ OUTLET TYPE	E BODY HT. DIM.	ADD
IP	Threaded	1-1/2IP	3-5/32"	98.00
		2IP	3-7/32"	98.00
NH	No-Hub	1-1/2NH, 2NH	2-31/32"	N/C

SUFFIXES		ADD
-C	Clamp Collar	N/C
-CP	Chrome-Plated Bronze Top	29.00
-G	Galvanized Cast Iron	173.00
–PC	Protective Cover	55.00
-VP	Vandal-Proof Secured Top	41.00
-Y	Sediment Bucket	53.00

*Regularly furnished unless otherwise specified.

This symbol denotes a product that is engineered to reduce installation and rework time.

For additional product information, please visit www.zurn.ca

Z461 6″ [152 MM] SQUARE MODULAR NON-ADJUSTABLE FLOOR DRAIN WITH CLAMPING FRAME

ENGINEERING SPECIFICATION

Zurn Z461 floor and shower drain features Dura-Coated cast iron, low profile body with 2″ [51 mm] bottom outlet, combination nickel bronze membrane clamp and frame with seepage slots, and square heel-proof, slotted, light-duty, secured strainer.

A Pipe Size inch [mm]	Grate Open Area sq in [cm²]	Approximate Weight lb [kg]
2 [51]	13 [84]	5 [2]

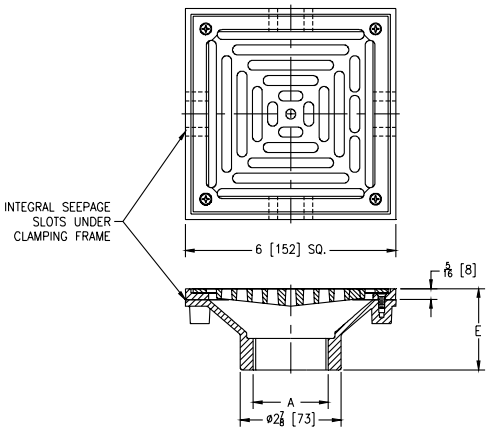

PREFIXES	DESCRIPTION	PIPE SIZE		LIST PRICE
ZN461*	D.C.C.I. Body Assembly with Polished Bronze Top	2″		1,036.00
OUTLETS (SPECIFY PIPE SIZE IN INCHES AND TYPE OF OUTLET)				
OUTLET TYPE		**PIPE SIZE/ OUTLET TYPE**	**E BODY HT. DIM.**	**ADD**
IP	Threaded	2IP	2-5/16″	N/C
SUFFIXES				**ADD**
-AR	Acid Resisting Epoxy Coated Cast Iron			246.00
-CP	Chrome-Plated Top			37.00
-DP	Decorative Polished Top			235.00
-G	Galvanized Cast Iron			273.00
◷ -PC	Protective Cover			88.00
-VP	Vandal-Proof Secured Top			81.00

Z503 15-3/8″ [391 MM] HEAVY-DUTY AREA DRAIN

ENGINEERING SPECIFICATION

Zurn Z503 15-3/8″ [391 mm] diameter top drain features Dura-Coated cast iron body with bottom outlet, seepage pan, and heavy-duty, anti-tilt, slotted grate.

NOTES

†Add 3/16″ [5 mm] to 1-7/8″ [48 mm] dimension for ZN

A Pipe Size inch [mm]	Grate Open Area sq in [cm²]	Approximate Weight lb [kg]
2 [51], 3 [76], 4 [102]	53 [242]	65 [29]
6 [152]		62 [28]
8 [203]		63 [29]

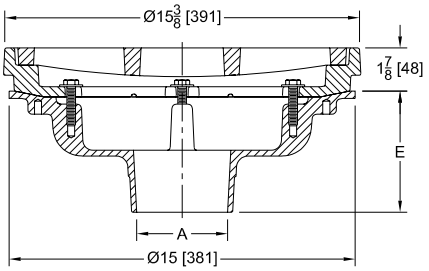

PREFIXES	DESCRIPTION	PIPE SIZE		LIST PRICE
Z503*	D.C.C.I. Body and Top	2″, 3″, 4″, 6″, 8″		2,709.00
ZN503	D.C.C.I. Body Assembly with Polished Nickel Bronze Top	2″, 3″, 4″, 6″, 8″		4,407.00
OUTLETS (SPECIFY PIPE SIZE IN INCHES AND TYPE OF OUTLET)				
OUTLET TYPE		**PIPE SIZE/OUTLET TYPE**	**E BODY HT. DIM.**	**ADD**
IC	Inside Caulk	3IC, 4IC, 6IC	5-1/4″	N/C
IG	Inside Gasket	3IG, 4IG, 6IG	5-1/4″	41.00
NH	No-Hub	2NH, 3NH, 4NH, 6NH, 8NH	5-1/4″	N/C
NL	Neo-Loc	2NL, 3NL, 4NL	4-5/8″	41.00
SUFFIXES				**ADD**
–AR	Acid Resisting Epoxy Coated Cast Iron			380.00
–DG	Duresist Grate			658.00
–G	Galvanized Cast Iron			708.00
–S	Secondary Strainer			101.00
◷ –TC	Neo-Loc Test Cap Gasket (2″, 3″, 4″ NL Bottom Outlet Only)			26.00
–TS	Top Secured with Slotted Screws			134.00
–V	Backwater Valve-Ball Float Type			-
–VP	Vandal-Proof Secured Top			134.00
–Y	Sediment Bucket			313.00

For additional product information, please visit www.zurn.ca

**Regularly furnished unless otherwise specified.*

◷ This symbol denotes a product that is engineered to reduce installation and rework time.

Z505 12-1/4″ [311 MM] HEAVY-DUTY DRAIN

ENGINEERING SPECIFICATION

Zurn Z505 12-1/4″ [311 mm] diameter top drain features Dura-Coated cast iron body with bottom outlet, seepage pan and combination membrane flashing clamp and frame with integral trap primer and plug for heavy-duty, deep flange, slotted grate with sediment bucket.

NOTES

†Add 3/16″ [5 mm] to 2″ [51 mm] dimension and 3/4″ [19 mm] to 12-1/4″ [311 mm] dimension for ZN

A Pipe Size inch [mm]	Grate Open Area sq in [cm²]	Approximate Weight lb [kg]
2 [51], 3 [76], 4 [102], 6 [152]	30 [194]	39 [18]
8 [203]		41 [19]

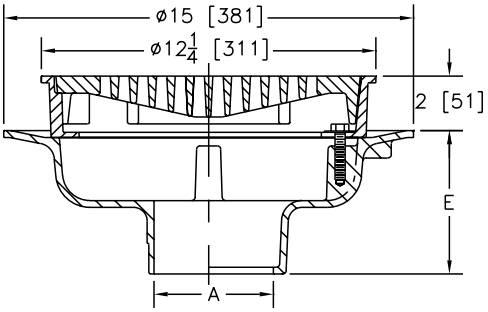

PREFIXES	DESCRIPTION	PIPE SIZE	LIST PRICE
Z505*	D.C.C.I. Body and Top	2″, 3″, 4″, 6″	1,055.00
		8″	1,258.00
ZN505	D.C.C.I. Body Assembly with Polished Nickel Bronze Top	2″, 3″, 4″, 6″	1,718.00
		8″	1,902.00

OUTLETS (SPECIFY PIPE SIZE IN INCHES AND TYPE OF OUTLET)				
OUTLET	TYPE	PIPE SIZE/OUTLET TYPE	E BODY HT. DIM.	ADD
IC	Inside Caulk	3IC, 4IC, 6IC	5-1/4″	N/C
IG	Inside Gasket	3IG, 4IG, 6IG	5-1/4″	41.00
IP	Threaded	2IP, 3IP, 4IP, 6IP, 8IP	3-3/4″	98.00
NH	No-Hub	2NH, 3NH, 4NH, 6NH, 8NH	5-1/4″	N/C
NL	Neo-Loc	2NL, 3NL, 4NL	4-5/8″	41.00

SUFFIXES		ADD
-AR	Acid Resisting Epoxy Coated Cast Iron	349.00
–F	Extension Frame - Per Inch (Specify Height)	132.00
–G	Galvanized Cast Iron	333.00
–HT	Square Hinged Grate	258.00
–S	Secondary Strainer	101.00
-SA	Stabilizer Assembly (See Z1036)	N/C
–SC	Solid Cover	187.00
–SS	Stainless Mesh Liner for Bucket	437.00
–T	Square Top	607.00
–TC	Neo-Loc Test Cap Gasket (2″, 3″, 4″ NL Bottom Outlet Only)	26.00
–TS	Top Secured with Slotted Screws	134.00
–TSP	Trap Seal Protection Device (Size Matches Drain Outlet Selected, See Z1072)	POA
–V	Backwater Valve-Ball Float Type	-
–VP	Vandal-Proof Secured Top	134.00
–90	90° Threaded Side Outlet Body Assembly (2″, 3″, 4″, 6″ Only)	363.00

*Regularly furnished unless otherwise specified.

This symbol denotes a product that is engineered to reduce installation and rework time.

For additional product information, please visit www.zurn.ca

Z507 7″ [178 MM] MEDIUM-DUTY DRAIN

ENGINEERING SPECIFICATION

Zurn Z507 7″ [178 mm] diameter top drain features Dura-Coated cast iron body with bottom outlet, seepage pan, and combination membrane flashing clamp and frame for medium-duty, cast iron, deep flange, slotted grate.

NOTES

†Add 3/16″ [5 mm] to 1-1/2″ [38 mm] or 1-15/16″ [49 mm] dimension for ZN

A Pipe Size inch [mm]	Grate Open Area sq in [cm²]	Approximate Weight lb [kg]
2 [51], 3 [76], 4 [102]	9 [58]	27 [12]
6 [152]		29 [13]

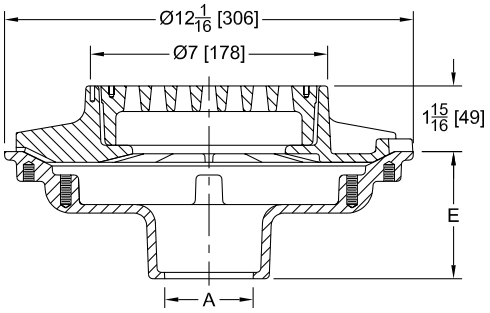

PREFIXES	DESCRIPTION	PIPE SIZE		LIST PRICE
Z507*	D.C.C.I. Body and Top	2″, 3″, 4″, 6″		431.00
ZN507	D.C.C.I. Body Assembly with Polished Nickel Bronze Top	2″, 3″, 4″, 6″		747.00
OUTLETS (SPECIFY PIPE SIZE IN INCHES AND TYPE OF OUTLET)				
OUTLET TYPE		**PIPE SIZE/ OUTLET TYPE**	**E BODY HT. DIM.**	**ADD**
IC	Inside Caulk	4IC	3-3/4″	N/C
IG	Inside Gasket	4IG	3-3/4″	41.00
IP	Threaded	3IP, 4IP	2-3/4″	98.00
NH	No-Hub	2NH, 3NH, 4NH	4-3/4″	N/C
		6NH	5-1/4″	N/C
NL	Neo-Loc	2NL, 3NL, 4NL	3-9/16″	41.00
SUFFIXES				**ADD**
–AR	Acid Resisting Epoxy Coated Cast Iron			280.00
–G	Galvanized Cast Iron			253.00
–P	Trap Primer Connection			31.00
◷ –TC	Neo-Loc Test Cap Gasket (3″, 4″ NL Bottom Outlet Only)			26.00
–TS	Top Secured with Slotted Screws			134.00
–VP	Vandal-Proof Secured Top			134.00
–Y	Sediment Bucket			64.00

For additional product information, please visit www.zurn.ca

**Regularly furnished unless otherwise specified.*

◷ This symbol denotes a product that is engineered to reduce installation and rework time.

Z508 9″ [229 MM] EXTRA-HEAVY-DUTY DRAIN

ENGINEERING SPECIFICATION

Zurn Z508 9″ [229 mm] diameter top drain features Dura-Coated cast iron body with bottom outlet, seepage pan, and combination membrane flashing clamp and frame with integrated trap primer and plug for extra heavy-duty, cast iron, deep flange, slotted Duresist grate with sediment bucket.

NOTES

†Add 3/16″ [5 mm] to 2″ [51 mm] dimension and 3/4″ [19 mm] to 9″ [229 mm] dimension for ZN

A Pipe Size inch [mm]	Grate Open Area sq in [cm²]	Approximate Weight lb [kg]
2 [51], 3 [76], 4 [102]	18 [116]	21 [10]
6 [152]		25 [11]

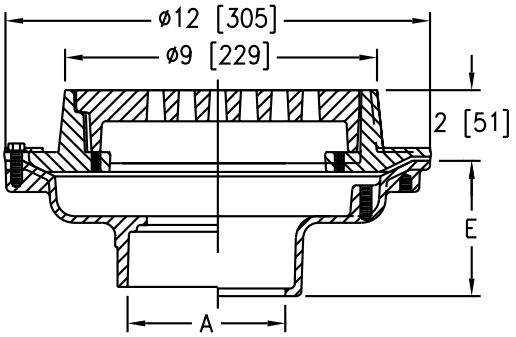

PREFIXES	DESCRIPTION	PIPE SIZE	LIST PRICE
Z508*	D.C.C.I. Body and Top	2″, 3″, 4″	702.00
		6″	840.00
ZN508	D.C.C.I. Body Assembly with Polished Nickel Bronze Top	2″, 3″, 4″	1,279.00
		6″	1,427.00

OUTLETS (SPECIFY PIPE SIZE IN INCHES AND TYPE OF OUTLET)				
OUTLET TYPE		PIPE SIZE/ OUTLET TYPE	E BODY HT. DIM.	ADD
IC	Inside Caulk	4IC	3-3/4″	N/C
IG	Inside Gasket	4IG	3-3/4″	41.00
IP	Threaded	4IP	2-3/4″	98.00
NH	No-Hub	2NH, 3NH, 4NH	4-3/4″	N/C
		6NH	5-1/4″	N/C
NL	Neo-Loc	2NL, 3NL, 4NL	3-9/16″	41.00

SUFFIXES		ADD
–AR	Acid Resisting Epoxy Coated Cast Iron	549.00
–G	Galvanized Cast Iron	412.00
–S	Secondary Strainer	52.00
–SC	Solid Cover with Lift Handle	508.00
–SG	Solid Gasketed Cover with Handle	612.00
◷ –TC	Neo-Loc Test Cap Gasket (2″, 3″, 4″ NL Bottom Outlet Only)	26.00
–TS	Top Secured with Slotted Screws	135.00
–TSP	Trap Seal Protection Device (Size Matches Drain Outlet Selected, See Z1072)	POA
–VP	Vandal-Proof Secured Top	157.00
–90	90° Threaded Side Outlet Body Assembly (2″, 3″, 4″)	363.00

**Regularly furnished unless otherwise specified.*

◷ This symbol denotes a product that is engineered to reduce installation and rework time.

For additional product information, please visit www.zurn.ca

Z509 12-1/4″ [311 MM] HEAVY-DUTY DRAIN

ENGINEERING SPECIFICATION

Zurn Z509 12-1/4″ [311 mm] diameter top drain features Dura-Coated cast iron body with bottom outlet, seepage pan, and combination membrane flashing clamp and frame for heavy-duty deep flange slotted Duresist grate with sediment bucket.

NOTES

†Add 3/16″ [5 mm] to 2″ [51 mm] dimension and 3/4″ [19 mm] to 12-1/4″ [311 mm] dimension for ZN

A Pipe Size inch [mm]	Grate Open Area sq in [cm²]	Approximate Weight lb [kg]
2 [51], 3 [76], 4 [102], 6 [152]	30 [194]	39 [18]
8 [203]		41 [19]

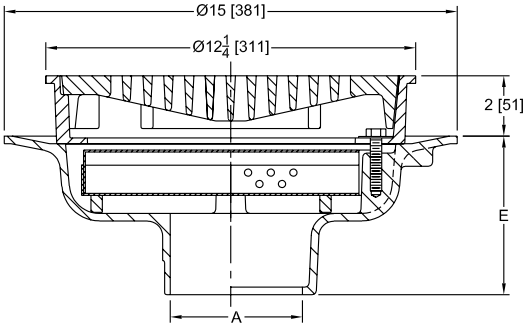

PREFIXES	DESCRIPTION	PIPE SIZE	LIST PRICE
Z509*	D.C.C.I. Body and Top	2″, 3″, 4″, 6″, 8″	746.00
ZN509	D.C.C.I. Body Assembly with Polished Nickel Bronze Top	2″, 3″, 4″, 6″, 8″	1,527.00

OUTLETS (SPECIFY PIPE SIZE IN INCHES AND TYPE OF OUTLET)				
OUTLET TYPE		PIPE SIZE/OUTLET TYPE	E BODY HT. DIM.	ADD
IC	Inside Caulk	3IC, 4IC, 6IC	5-1/4″	N/C
IG	Inside Gasket	3IG, 4IG, 6IG	5-1/4″	N/C
IP	Threaded	2IP, 3IP, 4IP, 6IP, 8IP	3-3/4″	79.00
NH	No-Hub	2NH, 3NH, 4NH, 6NH, 8NH	5-1/4″	N/C
		6NH (IP w/Z1040)	5-1/4″	N/C
NL	Neo-Loc	2NL, 3NL, 4NL	4-5/8″	N/C

SUFFIXES		ADD
–AR	Acid Resisting Epoxy Coated Cast Iron	349.00
–G	Galvanized Cast Iron	333.00
–HP	Heel-Proof Grate	N/C
–P	Trap Primer Connection	31.00
–S	Secondary Strainer	101.00
◷ –TC	Neo-Loc Test Cap Gasket (2″, 3″, 4″ NL Bottom Outlet Only)	116.00
–TS	Top Secured with Slotted Screws	134.00
–TSP	Trap Seal Protection Device (Size Matches Drain Outlet Selected, See Z1072)	POA
–V	Backwater Valve-Ball Float Type (See Z1099)	-
–VP	Vandal-Proof Secured Top	134.00
–Y	Sediment Bucket	250.00

For additional product information, please visit www.zurn.ca

**Regularly furnished unless otherwise specified.*

◷ This symbol denotes a product that is engineered to reduce installation and rework time.

Z511 9″ [229 MM] HEAVY-DUTY DRAIN

ENGINEERING SPECIFICATION

Zurn Z511 9″ [229 mm] diameter top drain features Dura-Coated cast iron, deep sump body with bottom outlet, seepage pan, and combination membrane flashing clamp and frame for heavy-duty, cast iron, deep flange grate.

NOTES

†Add 3/16″ [5 mm] to 2″ [51 mm] dimension and 3/4″ [19 mm] to 9″ [229 mm] dimension for ZN

A Pipe Size inch [mm]	Grate Open Area sq in [cm²]	Approximate Weight lb [kg]
2 [51], 3 [76], 4 [102]	18 [116]	40 [18]

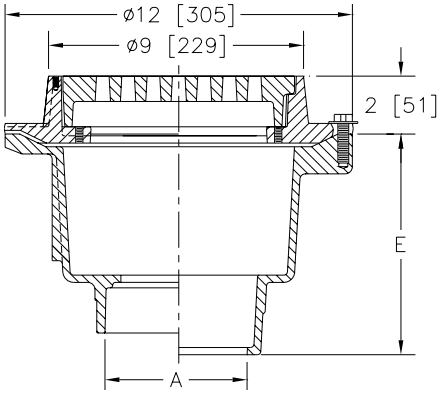

PREFIXES	DESCRIPTION	PIPE SIZE	LIST PRICE
Z511*	D.C.C.I. Body and Top	2″, 3″, 4″	721.00
ZN511	D.C.C.I. Body Assembly with Polished Nickel Bronze Top	2″, 3″, 4″	993.00

OUTLETS (SPECIFY PIPE SIZE IN INCHES AND TYPE OF OUTLET)				
OUTLET	TYPE	PIPE SIZE/ OUTLET TYPE	E BODY HT. DIM.	ADD
IC	Inside Caulk	3IC, 4IC	7-5/8″	N/C
IG	Inside Gasket	3IG, 4IG	7-5/8″	N/C
NL	Neo-Loc	2NL, 3NL, 4NL	6-7/8″	N/C
IP	Threaded	3IP, 4IP	7-5/8″	N/C

SUFFIXES		ADD
–AR	Acid Resisting Epoxy Coated Finish	456.00
–BT	Bell Trap	POA
–DG	Duresist Grate	534.00
–F	Extension Frame - Per Inch (Specify Height)	120.00
–G	Galvanized Cast Iron	316.00
–HP	Heel-Proof Grate	N/C
–J	Auxiliary Inlet Connection (Specify 1-1/2″ or 2″ IP, Number and Location)	431.00
–P	Trap Primer Connection	22.00
–S	Secondary Strainer	101.00
–SC	Solid Cover w/ Lift Handle	596.00
–SG	Solid Gasketed Cover	721.00
◷ –TC	Neo-Loc Test Cap Gasket (2″, 3″, 4″ NL Bottom Outlet Only)	116.00
–TS	Top Secured with Slotted Screws	137.00
–TSP	Trap Seal Protection Device (Size Matches Drain Outlet Selected, See Z1072)	POA
–V	Backwater Valve-Ball Float Type (Not Available with -Y)	575.00
–VP	Vandal-Proof Secured Top	178.00
–W	Winter Closure Plug (3IC, 4IC, 3IP, 4IP & 3IG Connections Only)	761.00
–Y	Sediment Bucket (Not Available with -V)	214.00

*Regularly furnished unless otherwise specified.

◷ *This symbol denotes a product that is engineered to reduce installation and rework time.*

For additional product information, please visit www.zurn.ca

Z512 12-1/4″ [311 MM] HEAVY-DUTY DRAIN

ENGINEERING SPECIFICATION

Zurn Z512 12-1/4″ [311 mm] diameter top drain features Dura-Coated cast iron deep sump body with bottom outlet, seepage pan, and combination flashing clamp and frame for heavy-duty tractor grate.

NOTES

†Add 3/16″ [5 mm] to 2-1/8″ [54 mm] dimension and 3/4″ [19 mm] to 12-1/4″ [311 mm] dimension for ZN

A Pipe Size inch [mm]	Grate Open Area sq in [cm²]	Approximate Weight lb [kg]
3 [76], 4 [102], 6 [152]	30 [194]	44 [20]

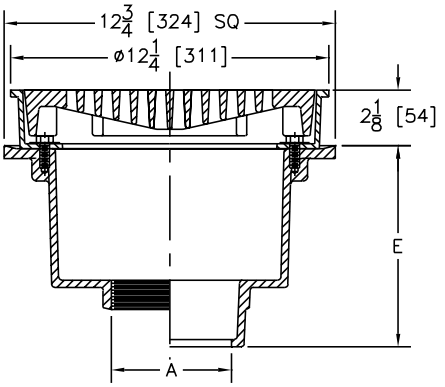

PREFIXES	DESCRIPTION	PIPE SIZE	LIST PRICE
Z512*	D.C.C.I. Body and Top	3″, 4″, 6″	762.00
ZN512	D.C.C.I. Body Assembly with Polished Nickel Bronze Top	3″, 4″, 6″	1,075.00

OUTLETS (SPECIFY PIPE SIZE IN INCHES AND TYPE OF OUTLET)

OUTLET TYPE		PIPE SIZE/ OUTLET TYPE	E BODY HT. DIM.	ADD
IC	Inside Caulk	4IC, 6IC	7-3/4″	N/C
IG	Inside Gasket	4IG, 6IG	7-3/4″	N/C
IP	Threaded	4IP, 6IP	6-5/16″	98.00
NL	Neo-Loc	3NL, 4NL	7-1/4″	N/C
NH	No-Hub	3NH, 4NH, 6NH	7-13/16″	N/C

SUFFIXES			ADD
-AR	Acid Resistant Epoxy Coated Cast Iron		901.00
–DG	Duresist Grate		534.00
–G	Galvanized Cast Iron		316.00
–S	Secondary Strainer		101.00
–SS	Stainless Mesh Liner for Bucket		517.00
–T	Square Top	Z	428.00
		ZN	607.00
◷ –TC	Neo-Loc Test Cap Gasket (3″, 4″ NL Bottom Outlet Only)		116.00
–TS	Top Secured with Slotted Screws		137.00
–VP	Vandal-Proof Secured Top		178.00
–Y	Sediment Bucket		214.00

For additional product information, please visit www.zurn.ca

**Regularly furnished unless otherwise specified.*

◷ *This symbol denotes a product that is engineered to reduce installation and rework time.*

Z513 9″ [229 MM] SQUARE HINGED HEAVY-DUTY DRAIN

ENGINEERING SPECIFICATION

Zurn Z513 9″ [229 mm] square top drain features Dura-Coated cast iron deep sump body with bottom outlet, seepage pan and combination membrane flashing clamp and frame for hinged, heavy-duty, slotted grate with suspended sediment bucket.

NOTES

†Add 3/16″ [5 mm] to 2-5/16″ [59 mm] dimension and 3/4″ [19 mm] to 9″ [229 mm] dimension for ZN

A Pipe Size inch [mm]	Grate Open Area sq in [cm²]	Approximate Weight lb [kg]
3 [76], 4 [102]	20 [129]	57 [26]

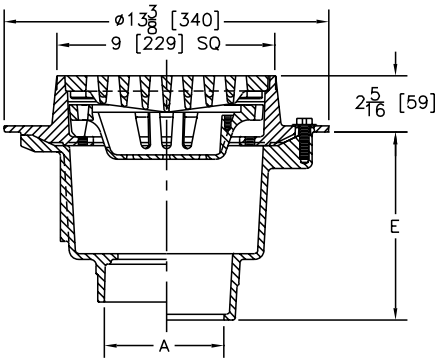

PREFIXES	DESCRIPTION	PIPE SIZE	LIST PRICE
Z513*	D.C.C.I. Body and Top	3″, 4″	1,019.00
ZN513	D.C.C.I. Body Assembly with Polished Nickel Bronze Top	3″, 4″	1,597.00

OUTLETS (SPECIFY PIPE SIZE IN INCHES AND TYPE OF OUTLET)				
OUTLET TYPE		PIPE SIZE/ OUTLET TYPE	E BODY HT. DIM.	ADD
NL	Neo-Loc	3NL, 4NL	6-5/8″	N/C

SUFFIXES		ADD
–AR	Acid Resisting Epoxy Coated Cast Iron	409.00
–G	Galvanized Cast Iron	316.00
–HL	Hinged Locking Grate	388.00
–P	Trap Primer Connection	22.00
–SS	Stainless Steel Mesh Liner for Bucket	517.00
◷ –TC	Neo-Loc Test Cap Gasket (3″, 4″ NL Bottom Outlet Only)	116.00
–VP	Vandal-Proof Secured Top	178.00

*Regularly furnished unless otherwise specified.

◷ *This symbol denotes a product that is engineered to reduce installation and rework time.*

For additional product information, please visit www.zurn.ca

Z520 9-1/4" [235 MM] ADJUSTABLE HEAVY-DUTY DRAIN

ENGINEERING SPECIFICATION

Zurn Z520 9-1/4" [235 mm] diameter top drain features Dura-Coated cast iron body with bottom outlet, seepage pan, membrane flashing clamp, and adjustable extension frame with heavy-duty, cast iron, deep flange, slotted grate.

NOTES

†Add 5/8" [16 mm] to 9-1/4" [235 mm] dimension and 2" [51 mm] to 3-1/2" [89 mm] dimension for ZN

A Pipe Size inch [mm]	Grate Open Area sq in [cm²]	Approximate Weight lb [kg]
2 [51], 3 [76], 4 [102]	15 [97]	33 [15]
6 [152]		38 [17]

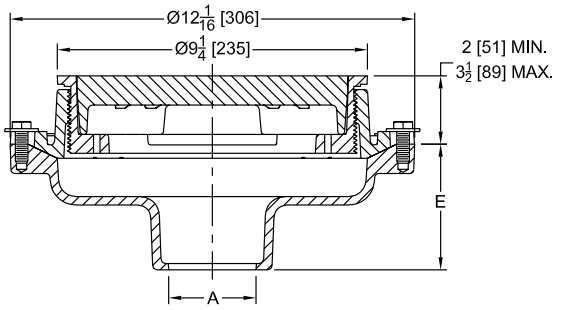

PREFIXES	DESCRIPTION	PIPE SIZE	LIST PRICE
Z520*	D.C.C.I. Body and Top	2", 3", 4"	664.00
		6"	733.00
ZN520	D.C.C.I. Body with Polished Nickel Bronze Top	2", 3", 4"	1,366.00
		6"	1,499.00

OUTLETS (SPECIFY PIPE SIZE IN INCHES AND TYPE OF OUTLET)				
OUTLET	TYPE	PIPE SIZE/OUTLET TYPE	E BODY HT. DIM.	ADD
IC	Inside Caulk	4IC	3-3/4"	N/C
IG	Inside Gasket	4IG	3-3/4"	N/C
IP	Threaded	4IP	2-3/4"	82.00
NH	No-Hub	2NH, 3NH, 4NH	4-3/4"	N/C
		6NH	5-1/4"	N/C
NL	Neo-Loc	2NL, 3NL, 4NL	3-9/16"	N/C

SUFFIXES			ADD
–F	Extension Frame - 3-1/4" Min., 5-1/2" Max. Per Ext. (Specify Height Required)		120.00
–G	Galvanized Cast Iron		316.00
–P	Trap Primer Connection		101.00
–S	Secondary Strainer		517.00
–SS	Stainless Mesh Liner for Bucket		428.00
–T	Square Top	Z	607.00
		ZN	607.00
◷ –TC	Neo-Loc Test Cap Gasket (2", 3", 4" NL Bottom Outlet Only)		116.00
–TS	Top Secured with Slotted Screws		59.00
–TSP	Trap Seal Protection Device (Size Matches Drain Outlet Selected, See Z1072)		POA
–V	Backwater Valve (See Z1099)		-
–VP	Vandal-Proof Secured Top		178.00
–Y	Sediment Bucket		214.00
–90	90° Side Outlet Body Assembly (See Z1042, 4IP Only)		-

For additional product information, please visit www.zurn.ca

**Regularly furnished unless otherwise specified.*

◷ This symbol denotes a product that is engineered to reduce installation and rework time.

Z521 12-1/4″ [311 MM] DIAMETER ADJUSTABLE HEAVY-DUTY DRAIN

ENGINEERING SPECIFICATION

Zurn Z521 12-1/4″ [311 mm] diameter top drain features Dura-Coated cast iron body with bottom outlet, seepage pan, membrane flashing clamp, and adjustable extension frame with heavy-duty tractor grate.

NOTES

†Add 11/16″ [17 mm] to 12-1/4″ [311 mm] dimension and 3/16″ [5 mm] to 3-1/16″ [78 mm] and 5″ [127 mm] dimension for ZN

A Pipe Size inch [mm]	Grate Open Area sq in [cm²]	Approximate Weight lb [kg]
2 [51], 3 [76], 4 [102]	33 [213]	60 [27]
6 [152]		57 [26]
8 [203]		58 [26]

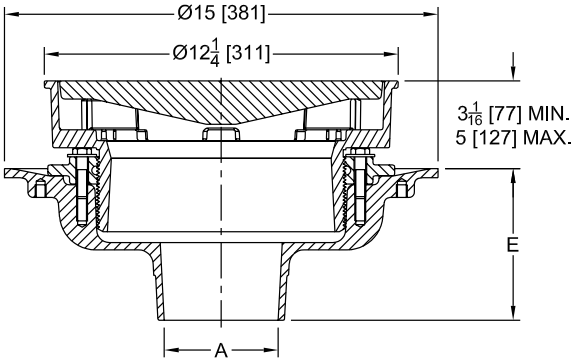

PREFIXES	DESCRIPTION	PIPE SIZE		LIST PRICE
Z521*	D.C.C.I. Body and Top	2″, 3″, 4″, 6″, 8″		1,051.00
ZN521	D.C.C.I. Body with Polished Nickel Bronze Top	2″, 3″, 4″, 6″, 8″		1,756.00
OUTLETS (SPECIFY PIPE SIZE IN INCHES AND TYPE OF OUTLET)				
OUTLET TYPE		**PIPE SIZE/OUTLET TYPE**	**E BODY HT. DIM.**	**ADD**
IC	Inside Caulk	3IC, 4IC, 6IC	5-1/4″	N/C
IG	Inside Gasket	3IG, 4IG, 6IG	5-1/4″	N/C
NH	No-Hub	2NH, 3NH, 4NH, 6NH, 8NH	5-1/4″	N/C
NL	Neo-Loc	2NL, 3NL, 4NL	4-5/8″	N/C
SUFFIXES				**ADD**
–G	Galvanized Cast Iron			316.00
–S	Secondary Strainer			101.00
–T	Square Top		Z	428.00
			ZN	607.00
◷ –TC	Neo-Loc Test Cap Gasket (2″, 3″, 4″ NL Bottom Outlet Only)			116.00
–TS	Top Secured with Slotted Screws			137.00
–V	Backwater Valve (Not Available with -Y) (See Z1099)			-
–VP	Vandal-Proof Secured Top			178.00
–Y	Sediment Bucket (Not Available with -V)			214.00

*Regularly furnished unless otherwise specified.

◷ *This symbol denotes a product that is engineered to reduce installation and rework time.*

For additional product information, please visit www.zurn.ca

Z526 12-1/4" [311 MM] ADJUSTABLE HEAVY-DUTY DRAIN

ENGINEERING SPECIFICATION

Zurn Z526 12-1/4" [311 mm] diameter top drain features Dura-Coated cast iron body with bottom outlet, seepage pan, membrane flashing clamp, and adjustable extension frame with heavy-duty tractor grate.

NOTES

†Add 11/16" [17 mm] to 12-1/4" [311 mm] dimension and 3/16" [5 mm] to 3-1/16" [78 mm] and 5" [127 mm] dimension for ZN

A Pipe Size inch [mm]	Grate Open Area sq in [cm²]	Approximate Weight lb [kg]
2 [51], 3 [76], 4 [102]	33 [213]	60 [27]
6 [152]		57 [26
8 [203]		58 [26]

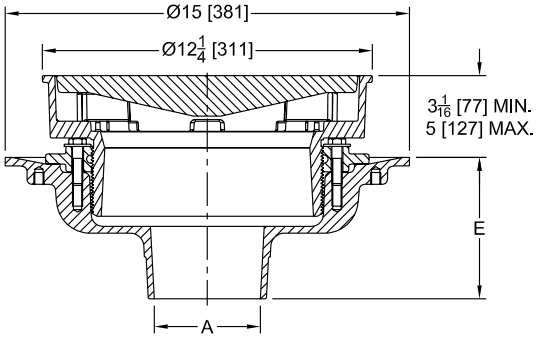

PREFIXES	DESCRIPTION	PIPE SIZE	LIST PRICE
Z526*	D.C.C.I. Body and Top	2", 3", 4", 6", 8"	907.00
ZN526	D.C.C.I. Body with Polished Nickel Bronze Top	2", 3", 4", 6", 8"	1,799.00

OUTLETS (SPECIFY PIPE SIZE IN INCHES AND TYPE OF OUTLET)

OUTLET	TYPE	PIPE SIZE/OUTLET TYPE	E BODY HT. DIM.	ADD
IC	Inside Caulk	3IC, 4IC, 6IC	5-1/4"	N/C
IG	Inside Gasket	3IG, 4IG, 6IG	5-1/4"	N/C
NH	No-Hub	2NH, 3NH, 4NH, 6NH, 8NH	5-1/4"	N/C
NL	Neo-Loc	2NL, 3NL, 4NL	4-5/8"	N/C

SUFFIXES			ADD
–G	Galvanized Cast Iron		330.00
–HP	Heel-Proof Grate		N/C
–S	Secondary Strainer		101.00
–T	Square Top	Z	428.00
		ZN	607.00
◷ –TC	Neo-Loc Test Cap Gasket (2", 3", 4" NL Bottom Outlet Only)		116.00
–TS	Top Secured with Slotted Screws		134.00
–V	Backwater Valve (See Z1099)		-
–VP	Vandal-Proof Secured Top		134.00
–Y	Sediment Bucket (Not Available with -V)		214.00
–90	90° Side Outlet Body Assembly (See Z1042)		-

For additional product information, please visit www.zurn.ca

**Regularly furnished unless otherwise specified.*

◷ This symbol denotes a product that is engineered to reduce installation and rework time.

Z530 9″ [229 MM] MEDIUM-DUTY WIDE FLANGE DECK DRAIN

ENGINEERING SPECIFICATION

Zurn Z530 9″ [229 mm] diameter wide flange deck drain for latex decks features Dura-Coated cast iron body with latex troweling flange, flat heel-proof, medium-duty grate, and suspended sediment bucket.

A Pipe Size inch [mm]	Grate Open Area sq in [cm²]	Approximate Weight lb [kg]
2 [51], 3 [76], 4 [102]	18 [116]	49 [22]

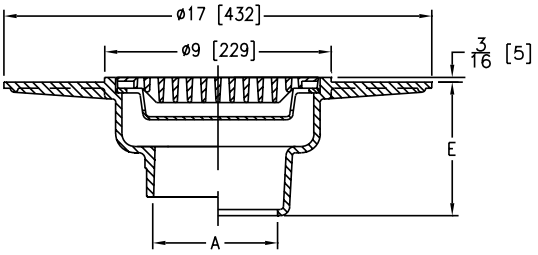

PREFIXES	DESCRIPTION	PIPE SIZE		LIST PRICE
Z530*	D.C.C.I. Body and Top	2″, 3″, 4″		891.00
OUTLETS (SPECIFY PIPE SIZE IN INCHES AND TYPE OF OUTLET)				
OUTLET	TYPE	PIPE SIZE/OUTLET TYPE	E BODY HT. DIM.	ADD
IC	Inside Caulk	2IC, 3IC, 4IC	5-1/2″	N/C
IP	Threaded	2IP, 3IP, 4IP	4″	82.00
NL	Neo-Loc	2NL, 3NL, 4NL	4-3/4″	N/C
SUFFIXES				ADD
–AR	Acid Resisting Epoxy Coated Cast Iron			456.00
–C	Underdeck Clamp			237.00
–DG	Duresist Grate			534.00
–G	Galvanized Cast Iron			316.00
◷ –TC	Neo-Loc Test Cap Gasket (2″, 3″, 4″ NL Bottom Outlet Only)			116.00
–TS	Top Secured with Slotted Screws			137.00
–VP	Vandal-Proof Secured Top			178.00
–XJ	Expansion Joint (Use with IP Type Outlet) (See Z190)			POA

Z531 9″ [229 MM] ADJUSTABLE FRAME WIDE FLANGE MEDIUM-DUTY DECK DRAIN

ENGINEERING SPECIFICATION

Zurn Z531 9″ [229 mm] diameter adjustable frame wide flange deck drain features Dura-Coated cast iron body with 10-1/4″ [260 mm] diameter latex troweling flange and combination adjustable latex troweling-edge-form and membrane flashing clamp with flat medium-duty grate.

A Pipe Size inch [mm]	Grate Open Area sq in [cm²]	Approximate Weight lb [kg]
2 [51], 3 [76], 4 [102]	18 [116]	54 [24]

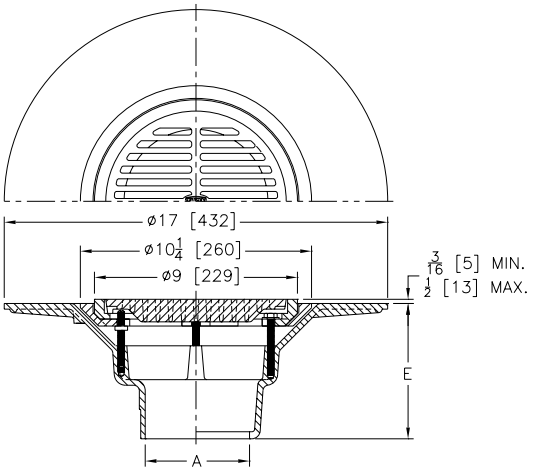

PREFIXES	DESCRIPTION	PIPE SIZE		LIST PRICE
Z531*	D.C.C.I. Body and Top	2″, 3″, 4″		1,440.00
ZN531	D.C.C.I. Body with Polished Nickel Bronze Top	2″, 3″, 4″		1,955.00
OUTLETS (SPECIFY PIPE SIZE IN INCHES AND TYPE OF OUTLET)				
OUTLET	TYPE	PIPE SIZE/OUTLET TYPE	E BODY HT. DIM.	ADD
IC	Inside Caulk	2IC, 3IC, 4IC	6″	N/C
IP	Threaded	2IP, 3IP, 4IP	4-1/2″	82.00
NH	No-Hub	2NH, 3NH, 4NH	6″	N/C
NL	Neo-Loc	2NL, 3NL, 4NL	5-3/8″	N/C
SUFFIXES				ADD
–C	Underdeck Clamp			237.00
–DG	Duresist Grate			534.00
–G	Galvanized Cast Iron			316.00
–S	Secondary Strainer			101.00
◷ –TC	Neo-Loc Test Cap Gasket (2″, 3″, 4″ NL Bottom Outlet Only)			116.00
–TS	Top Secured with Slotted Screws			121.00
–VP	Vandal-Proof Secured Top			178.00
–Y	Sediment Bucket			214.00

*Regularly furnished unless otherwise specified.

◷ *This symbol denotes a product that is engineered to reduce installation and rework time.*

For additional product information, please visit www.zurn.ca

Z532 12-1/4" [311 MM] DIAMETER WIDE FLANGE HEAVY-DUTY FLOOR DRAIN

ENGINEERING SPECIFICATION

Zurn Z532 12-1/4" [311 mm] diameter wide flange floor drain features Dura-Coated cast iron body with bottom outlet, seepage pan, combination membrane flashing clamp, and frame with latex troweling flange, heavy-duty slotted grate, and suspended sediment bucket.

A Pipe Size inch [mm]	Grate Open Area sq in [cm²]	Approximate Weight lb [kg]
2 [51], 3 [76], 4 [102], 6 [152]	30 [194]	54 [24]

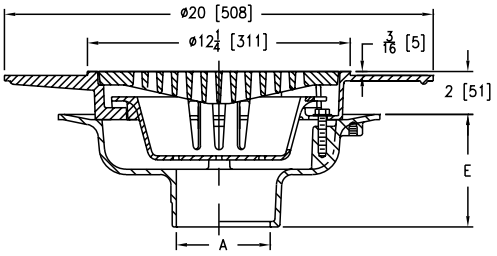

PREFIXES	DESCRIPTION	PIPE SIZE	LIST PRICE
Z532*	D.C.C.I. Body and Top	2", 3", 4", 6"	1,197.00
ZN532	D.C.C.I. Body with Polished Nickel Bronze Top	2", 3", 4", 6"	2,283.00

OUTLETS (SPECIFY PIPE SIZE IN INCHES AND TYPE OF OUTLET)				
OUTLET TYPE		PIPE SIZE/OUTLET TYPE	E BODY HT. DIM.	ADD
IC	Inside Caulk	3IC, 4IC, 6IC	5-1/4"	N/C
IG	Inside Gasket	3IG, 4IG, 6IG	5-1/4"	N/C
NH	No-Hub	2NH, 3NH, 4NH, 6NH	5-1/4"	N/C
NL	Neo-Loc	2NL, 3NL, 4NL	4-1/2"	N/C

SUFFIXES		ADD
–AR	Acid Resistant Epoxy Coating	381.00
–G	Galvanized Cast Iron	316.00
–HP	Heel-Proof Grate	N/C
◷ –TC	Neo-Loc Test Cap Gasket (2", 3", 4" NL Bottom Outlet Only)	116.00
–TS	Top Secured with Slotted Screws	137.00
–VP	Vandal-Proof Secured Top	178.00

Z533 9" [229 MM] DIAMETER HEAVY-DUTY PARKING DECK DRAIN WITH SUPPORT FLANGE

ENGINEERING SPECIFICATION

Zurn Z533 9" [229 mm] diameter parking deck drain features Dura-Coated cast iron body with bottom outlet, heavy-duty, gasketed drain support flange with heavy-duty Duresist, slotted grate.

NOTES

†Add 3/16" [5 mm] to 2" [51 mm] dimension for ZB and ZN

A Pipe Size inch [mm]	Grate Open Area sq in [cm²]	Approximate Weight lb [kg]
3 [76], 4 [102]	16 [103]	48 [22]

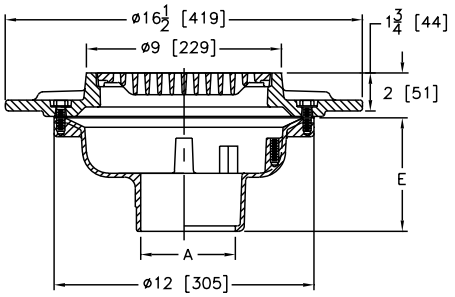

PREFIXES	DESCRIPTION	PIPE SIZE	LIST PRICE
Z533*	D.C.C.I. Body and Top	3", 4"	1,269.00
ZN533	D.C.C.I. Body with Polished Nickel Bronze Top	3", 4"	1,808.00

OUTLETS (SPECIFY PIPE SIZE IN INCHES AND TYPE OF OUTLET)				
OUTLET TYPE		PIPE SIZE/OUTLET TYPE	E BODY HT. DIM.	ADD
NH	No-Hub	3NH, 4NH	5-1/4"	N/C
NL	Neo-Loc	3NL, 4NL	4-9/16"	N/C

SUFFIXES		ADD
–C	Underdeck Clamp	250.00
–G	Galvanized Cast Iron	316.00
–TS	Top Secured with Slotted Screws	137.00
–VP	Vandal-Proof Secured Top	178.00
–Y	Sediment Bucket	214.00

For additional product information, please visit www.zurn.ca

**Regularly furnished unless otherwise specified.*

◷ This symbol denotes a product that is engineered to reduce installation and rework time.

Z534 12-1/4″ [311 MM] DIAMETER HEAVY-DUTY PARKING DECK DRAIN WITH SUPPORT FLANGE

ENGINEERING SPECIFICATION

Zurn Z534 12-1/4″ [311 mm] diameter parking deck drain features Dura-Coated cast iron body with bottom outlet, heavy-duty, gasketed drain support flange with heavy-duty, slotted grate.

NOTES

†Add 3/16″ [5 mm] to 2″ [51 mm] dimension and 3/4″ [19 mm] to 12-1/4″ [311 mm] dimension for ZB and ZN

A Pipe Size inch [mm]	Grate Open Area sq in [cm²]	Approximate Weight lb [kg]
2 [51], 3 [76], 4 [102], 6 [152]	30 [194]	78 [35]
8 [203]		80 [36]

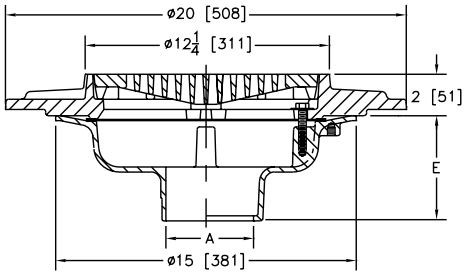

PREFIXES	DESCRIPTION	PIPE SIZE	LIST PRICE
Z534*	D.C.C.I. Body and Top	2″, 3″, 4″, 6″	1,078.00
		8″	1,466.00
ZN534	D.C.C.I. Body with Polished Nickel Bronze Top	2″, 3″, 4″, 6″	1,802.00
		8″	2,203.00

OUTLETS (SPECIFY PIPE SIZE IN INCHES AND TYPE OF OUTLET)				
OUTLET	TYPE	PIPE SIZE/OUTLET TYPE	E BODY HT. DIM.	ADD
IC	Inside Caulk	3IC, 4IC, 6IC	5-1/4″	N/C
IG	Inside Gasket	3IG, 4IG, 6IG	5-1/4″	N/C
IP	Threaded	2IP, 3IP, 4IP, 6IP, 8IP	3-3/4″	41.00
NH	No-Hub	2NH, 3NH, 4NH, 6NH, 8NH	5-1/4″	N/C
NL	Neo-Loc	2NL, 3NL, 4NL	4-5/8″	N/C

SUFFIXES		ADD
–C	Underdeck Clamp	116.00
–G	Galvanized Cast Iron	330.00
–HP	Heel-Proof Grate	N/C
◷ –SA	Stabilizer Assembly (See Z1036)	N/C
◷ –TC	Neo-Loc Test Cap Gasket (2″, 3″, 4″ NL Bottom Outlet Only)	116.00
–TS	Top Secured with Slotted Screws	59.00
–VP	Vandal-Proof Secured Top	175.00
–XJ	Expansion Joint (Use with IP Type Outlet) (See Z190)	-
–Y	Sediment Bucket	215.00

Z535 HEAVY-DUTY PARKING STRUCTURE DRAIN

ENGINEERING SPECIFICATION

Zurn Z535 square top, heavy-duty drain features oven-cured acid resistant epoxy-coated aluminum or cast iron body with bottom outlet, top membrane clamping collar, anti-ponding slots, sediment bucket and heavy-duty, anti-tilt, hinged, slotted grate with stainless steel hinge pins.

A Pipe Size inch [mm]	Grate Open Area sq in [cm²]	Approximate Weight lb [kg]
3 [76], 4 [102], 6 [152], 8 [203]	56 [361]	29 [13] for aluminum, 75 [34] for cast iron

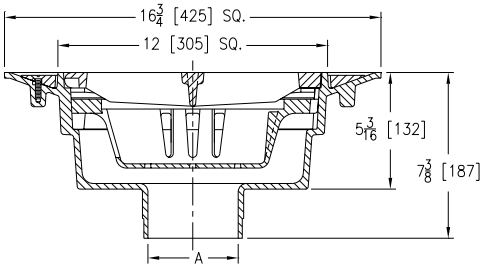

PREFIXES	DESCRIPTION	PIPE SIZE	LIST PRICE
Z535*	A.R.C. Aluminum Body and Top	3″, 4″, 6″, 8″	2,402.00
ZC535	D.C.C.I. Body and Top	3″, 4″, 6″, 8″	2,203.00

OUTLETS (SPECIFY PIPE SIZE IN INCHES AND TYPE OF OUTLET)			
OUTLET	TYPE	PIPE SIZE/OUTLET TYPE	ADD
NH	No-Hub	3NH, 4NH, 6NH, 8NH	N/C

SUFFIXES		ADD
–CI	Cast Iron Grate	445.00
–L	Locking Device	131.00

*Regularly furnished unless otherwise specified.

◷ *This symbol denotes a product that is engineered to reduce installation and rework time.*

For additional product information, please visit www.zurn.ca

Z536-8 8″ [203 MM] DIAMETER HEAVY-DUTY ADJUSTABLE FLOOR DRAIN

ENGINEERING SPECIFICATION

Zurn Z536 8″ [203 mm] diameter heavy-duty adjustable floor drain features a Dura-Coated cast iron bottom outlet body, invertible clamping collar, adjustable leveling frame, and deep grate.

NOTES

†Add 3/16″ [5 mm] to 2″ [51 mm] dimension for ZN

A Pipe Size inch [mm]	Grate Open Area sq in [cm²]	Approximate Weight lb [kg]
3 [76], 4 [102], 6 [152]	17 [112]	29 [13]

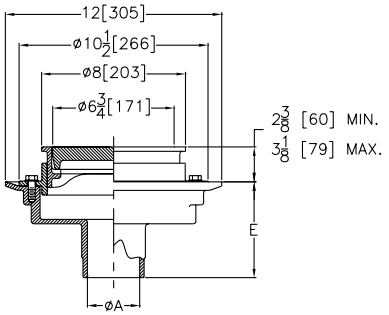

PREFIXES	DESCRIPTION	PIPE SIZE	LIST PRICE
Z536*	D.C.C.I. Body and Top	3″, 4″, 6″	599.00
ZN536	D.C.C.I Body with Polished Nickel Bronze Top	3″, 4″, 6″	1,006.00

OUTLETS (SPECIFY PIPE SIZE IN INCHES AND TYPE OF OUTLET)

OUTLET TYPE		PIPE SIZE/OUTLET TYPE	E BODY HT. DIM.	ADD
IC	Inside Caulk	3IC, 4IC, 6IC	5-1/4″ [133 mm]	N/C
IP	Threaded	3IP, 4IP, 6IP	3-3/4″ [95 mm]	98.00
NH	No-Hub	3NH, 4NH, 6NH	5-1/4″ [133 mm]	N/C
NL	Neo-Loc	3NL, 4NL	4-5/8″ [117 mm]	N/C

SUFFIXES			ADD
–F0	3-1/2″ x 9″ [89 mm x 229 mm] Funnel (See Z414-1)	Z	158.00
		ZN	328.00
–G	Galvanized Complete		457.00
–P	1/2″ [13 mm] Trap Primer Connection		22.00
–VP	Vandal-Proof Secured Top		137.00
–Y	Sediment Bucket		59.00

Z536 15-3/8″ [391 MM] DIAMETER HEAVY-DUTY PARKING DECK DRAIN WITH SUPPORT FLANGE

ENGINEERING SPECIFICATION

Zurn Z536 15-3/8″ [391 mm] diameter parking deck drain features Dura-Coated cast iron body with bottom outlet, heavy-duty, gasketed drain support flange with heavy-duty, slotted grate.

NOTES

†Add 3/16″ [5 mm] to 2″ [51 mm] dimension for ZN

A Pipe Size inch [mm]	Grate Open Area sq in [cm²]	Approximate Weight lb [kg]
3 [76], 4 [102], 6 [152]	56 [361]	95 [43]
8 [203]		97 [44]

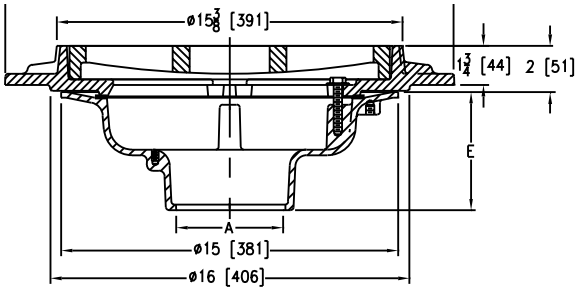

PREFIXES	DESCRIPTION	PIPE SIZE	LIST PRICE
Z536*	D.C.C.I. Body and Top	3″, 4″, 6″	3,308.00
		8″	3,705.00
ZN536	D.C.C.I. Body with Polished Nickel Bronze Top	3″, 4″, 6″	4,251.00
		8″	4,649.00

OUTLETS (SPECIFY PIPE SIZE IN INCHES AND TYPE OF OUTLET)

OUTLET TYPE		PIPE SIZE/OUTLET TYPE	E BODY HT. DIM.	ADD
IP	Threaded	4IP	3-3/4″	84.00
NH	No-Hub	3NH, 4NH, 6NH, 8NH	5-1/4″	N/C
NL	Neo-Loc	3NL, 4NL	4-5/8″	N/C

SUFFIXES		ADD
–C	Underdeck Clamp	253.00
–G	Galvanized Cast Iron	1,148.00
–VP	Vandal-Proof Secured Top	157.00
–Y	Sediment Bucket	330.00

Z537 15-7/8″ [403 MM] SQUARE TOP HEAVY-DUTY PARKING DECK DRAIN WITH SUPPORT FLANGE

ENGINEERING SPECIFICATION

Zurn Z537 15-7/8″ [403 mm] square top parking deck drain features Dura-Coated cast iron body with bottom outlet, heavy-duty, gasketed drain support flange with heavy-duty, slotted ductile iron grate.

NOTES

†Add 3/16″ [5 mm] to 1-1/2″ dimension for ZN

A Pipe Size inch [mm]	Grate Open Area sq in [cm²]	Approximate Weight lb [kg]
2 [51], 3 [76], 4 [102], 6 [152]	79 [510]	122 [55]
8 [203]		124 [56]

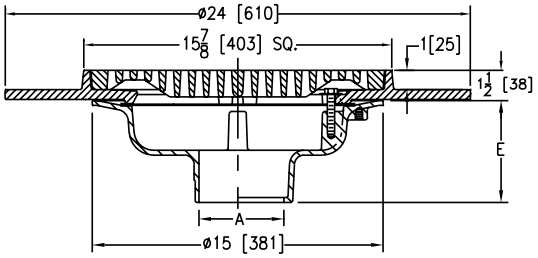

PREFIXES	DESCRIPTION	PIPE SIZE	LIST PRICE
Z537*	D.C.C.I. Body and Top	2″, 3″, 4″, 6″	3,350.00
		8″	3,504.00
ZN537	D.C.C.I. Body with Polished Nickel Bronze Top	2″, 3″, 4″, 6″	5,140.00
		8″	5,288.00

OUTLETS (SPECIFY PIPE SIZE IN INCHES AND TYPE OF OUTLET)				
OUTLET	TYPE	PIPE SIZE/OUTLET TYPE	E BODY HT. DIM.	ADD
IP	Threaded	3IP, 4IP, 6IP, 8IP	3-3/4″	82.00
NH	No-Hub	3NH, 4NH, 6NH, 8NH	5-1/4″	N/C
NL	Neo-Loc	2NL, 3NL, 4NL	4-5/8″	N/C

SUFFIXES		ADD
–C	Underdeck Clamp	250.00
–G	Galvanized Cast Iron	655.00
–VP	Vandal-Proof Secured Top	178.00
–Y	Sediment Bucket	326.00

Z539 12-1/4″ [311 MM] HEAVY-DUTY DRAIN WITH DEEP SUMP

ENGINEERING SPECIFICATION

Zurn Z539 12-1/4″ [311 mm] diameter top drain features Dura-Coated cast iron deep sump body with bottom outlet, seepage pan, and combination membrane flashing clamp and frame for sediment bucket and heavy-duty, slotted grate.

NOTES

†Add 3/16″ [5 mm] to 2″ [51 mm] dimension and 3/4″ [19 mm] to 12-1/4″ [311 mm] dimension for ZN

A Pipe Size inch [mm]	Grate Open Area sq in [cm²]	Approximate Weight lb [kg]
3 [76], 4 [102], 6 [152]	30 [194]	68 [31]
8 [203]		

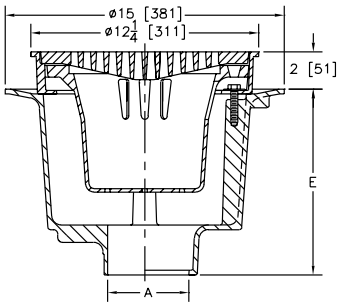

PREFIXES	DESCRIPTION	PIPE SIZE	LIST PRICE
Z539*	D.C.C.I. Body and Top	3″, 4″, 6″	1,416.00
		8″	1,471.00
ZN539	D.C.C.I. Body with Polished Nickel Bronze Top	3″, 4″, 6″	2,087.00
		8″	2,342.00

OUTLETS (SPECIFY PIPE SIZE IN INCHES AND TYPE OF OUTLET)				
OUTLET	TYPE	PIPE SIZE/OUTLET TYPE	E BODY HT. DIM.	ADD
NH	No-Hub	3NH, 4NH, 6NH, 8NH	10″	N/C
NL	Neo-Loc	3NL, 4NL	9-5/16″	N/C

SUFFIXES			ADD
–G	Galvanized Cast Iron		717.00
–HP	Heel-Proof Grate		N/C
–SS	Stainless Steel Mesh Liner for Bucket		POA
–T	Square Top	Z	428.00
		ZN	607.00
–TC	Neo-Loc Test Cap Gasket (3″, 4″ NL Bottom Outlet Only)		116.00
–TS	Top Secured with Slotted Screws		137.00
–VP	Vandal-Proof Secured Top		178.00
–YF	Free Standing Bucket		N/C

*Regularly furnished unless otherwise specified.

This symbol denotes a product that is engineered to reduce installation and rework time.

For additional product information, please visit www.zurn.ca

Z540 12-1/4″ [311 MM] MEDIUM-DUTY DRAIN WITH SUR-SET BUCKET

ENGINEERING SPECIFICATION

Zurn Z540 12-1/4″ [311 mm] diameter top drain features Dura-Coated cast iron body with bottom outlet, seepage pan, and combination membrane flashing clamp and frame with integrated trap primer and plug with Sur-Set bucket and medium-duty, slotted, Duresist grate.

NOTES

†Add 3/16″ [5 mm] to 2″ [51 mm] dimension and 3/4″ [19 mm] to 12-1/4″ [311 mm] dimension for ZN

A Pipe Size inch [mm]	Grate Open Area sq in [cm²]	Approximate Weight lb [kg]
2 [51], 3 [76], 4 [102]	18 [116]	44 [20]
6 [152]		45 [20]
8 [203]		46 [21]

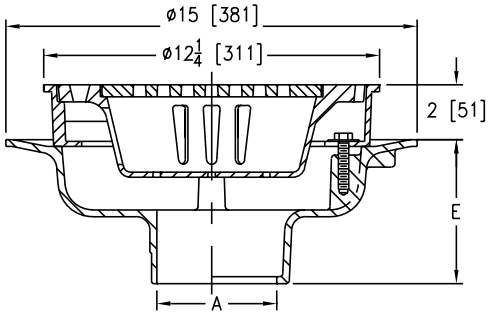

PREFIXES	DESCRIPTION	PIPE SIZE	LIST PRICE
Z540*	D.C.C.I. Body and Top	2″, 3″, 4″, 6″	1,259.00
		8″	1,515.00
ZN540	D.C.C.I. Body with Polished Nickel Bronze Top	2″, 3″, 4″, 6″	1,861.00
		8″	2,114.00

OUTLETS (SPECIFY PIPE SIZE IN INCHES AND TYPE OF OUTLET)

OUTLET	TYPE	PIPE SIZE/OUTLET TYPE	E BODY HT. DIM.	ADD
IC	Inside Caulk	3IC, 4IC, 6IC	5-1/4″	N/C
IG	Inside Gasket	3IG, 4IG, 6IG	5-1/4″	N/C
NH	No-Hub	2NH, 3NH, 4NH, 6NH, 8NH	5-1/4″	N/C
NL	Neo-Loc	2NL, 3NL, 4NL	4-5/8″	N/C

SUFFIXES		ADD
–G	Galvanized Cast Iron	330.00
◷ -SA	Stabilizer Assembly (See Z1036)	N/C
◷ –TC	Neo-Loc Test Cap Gasket (2″, 3″, 4″ NL Bottom Outlet Only)	116.00
–TS	Top Secured with Slotted Screws	137.00
–VP	Vandal-Proof Secured Top	178.00

For additional product information, please visit www.zurn.ca

**Regularly furnished unless otherwise specified.*

◷ This symbol denotes a product that is engineered to reduce installation and rework time.

Z541 12-1/4" [311 MM] DIAMETER HEAVY-DUTY DRAIN

ENGINEERING SPECIFICATION

Zurn Z541 12-1/4" [311 mm] diameter top drain features Dura-Coated cast iron body with bottom outlet, seepage pan, and combination membrane flashing clamp and frame with integrated trap primer and plug, with anti-tilt, heavy-duty, slotted, Duresist grate and suspended polypropylene sediment bucket.

NOTES

†Add 3/16" [5 mm] to 2" [51 mm] dimension and 3/4" [19 mm] to 12-1/4" [311 mm] dimension for ZN

A Pipe Size inch [mm]	Grate Open Area sq in [cm²]	Approximate Weight lb [kg]
2 [51], 3 [76], 4 [102]	30 [194]	51 [23]
6 [152]		52 [24]
8 [203]		53 [24]

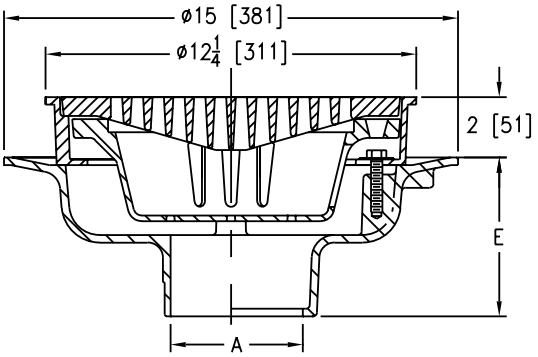

PREFIXES	DESCRIPTION	PIPE SIZE	LIST PRICE
Z541*	D.C.C.I. Body and Top	2", 3", 4", 6"	828.00
		8"	1,073.00
ZN541	D.C.C.I. Body with Polished Nickel Bronze Top	2", 3", 4", 6"	1,209.00
		8"	1,478.00

OUTLETS (SPECIFY PIPE SIZE IN INCHES AND TYPE OF OUTLET)

OUTLET	TYPE	PIPE SIZE/OUTLET TYPE	E BODY HT. DIM.	ADD
IC	Inside Caulk	3IC, 4IC, 6IC	5-1/4"	N/C
IG	Inside Gasket	3IG, 4IG, 6IG	5-1/4"	N/C
IP	Threaded	2IP, 3IP, 4IP, 6IP, 8IP	3-3/4"	82.00
NH	No-Hub	2NH, 3NH, 4NH, 6NH, 8NH	5-1/4"	N/C
NL	Neo-Loc	2NL, 3NL, 4NL	4-5/8"	N/C

SUFFIXES		ADD
–AR	Acid Resisting Epoxy Coated Cast Iron	479.00
–DX	Dex-O-Tex Flange	674.00
–G	Galvanized Cast Iron	685.00
–H	Hinged Grate	250.00
–HP	Heel-Proof Grate	N/C
–S	Secondary Strainer	101.00
◷ –SA	Stabilizer Assembly (See Z1036)	N/C
–SS	Stainless Steel Mesh Liner for Bucket	517.00
◷ –TC	Neo-Loc Test Cap Gasket (2", 3", 4" NL Bottom Outlet Only)	116.00
–TG	Tractor Grate	252.00
–TS	Top Secured with Slotted Screws	137.00
–TSP	Trap Seal Protection Device (Size Matches Drain Outlet Selected, See Z1072)	POA
–V	Backwater Valve (See Z1099)	-
–VP	Vandal-Proof Secured Top	178.00
–YC	Cast Iron Sediment Bucket	214.00
–90	90° Threaded Side Outlet Body Assembly (2" thru 6")	POA

**Regularly furnished unless otherwise specified.*

◷ *This symbol denotes a product that is engineered to reduce installation and rework time.*

For additional product information, please visit www.zurn.ca

Z545 16″ [152 MM] DIAMETER HEAVY-DUTY DRAIN

ENGINEERING SPECIFICATION

Zurn Z545 16″ [152 mm] diameter top drain features Dura-Coated cast iron body with bottom outlet, seepage pan, and combination membrane flashing clamp and frame for heavy-duty cast iron, slotted grate.

NOTES

†Add 3/16″ [5 mm] to 3-1/2″ [89 mm] dimension for ZN

A Pipe Size inch [mm]	Grate Open Area sq in [cm²]	Approximate Weight lb [kg]
2 [51], 3 [76], 4 [102], 6 [152]	45 [290]	69 [31]
8 [203]		71 [32]

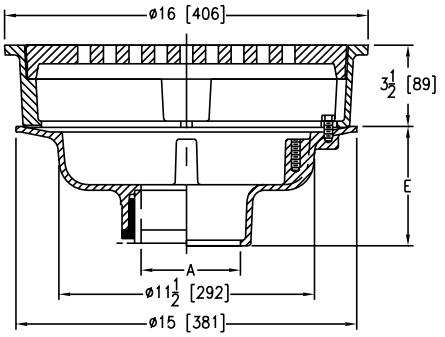

PREFIXES	DESCRIPTION	PIPE SIZE	LIST PRICE
Z545*	D.C.C.I. Body and Top	2″, 3″, 4″, 6″, 8″	2,708.00
ZN545	D.C.C.I. Body with Polished Nickel Bronze Top	2″, 3″, 4″, 6″, 8″	5,781.00

OUTLETS (SPECIFY PIPE SIZE IN INCHES AND TYPE OF OUTLET)

OUTLET	TYPE	PIPE SIZE/OUTLET TYPE	E BODY HT. DIM.	ADD
IC	Inside Caulk	3IC, 4IC	5-1/4″	N/C
IG	Inside Gasket	3IG, 4IG	5-1/4″	N/C
IP	Threaded	2IP, 3IP, 4IP, 6IP, 8IP	3-3/4″	POA
NH	No-Hub	2NH, 3NH, 4NH, 6NH, 8NH	5-1/4″	N/C
NL	Neo-Loc	2NL, 3NL, 4NL	4-5/8″	N/C

SUFFIXES		ADD
–DG	Duresist Grate	654.00
–G	Galvanized Cast Iron	457.00
–P	Trap Primer Connection	22.00
◷ –TC	Neo-Loc Test Cap Gasket (2″, 3″, 4″ NL Bottom Outlet Only)	116.00
–VP	Vandal-Proof Secured Top	178.00

For additional product information, please visit www.zurn.ca

**Regularly furnished unless otherwise specified.*

◷ *This symbol denotes a product that is engineered to reduce installation and rework time.*

Z546 21-1/2″ [546 MM] DIAMETER EXTRA HEAVY-DUTY DRAIN

ENGINEERING SPECIFICATION

Zurn Z546 21-1/2″ [546 mm] diameter top drain features Dura-Coated cast iron body with bottom outlet, seepage pan, and combination membrane flashing clamp and frame with seepage holes, extra heavy-duty, cast iron, slotted grate with suspended sediment bucket.

A Pipe Size inch [mm]	Grate Open Area sq in [cm²]	Approximate Weight lb [kg]
8 [203]	110 [710]	163 [74]
10 [254]		
12 [305]		

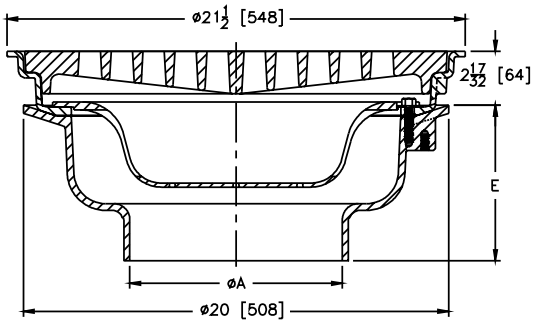

PREFIXES	DESCRIPTION	PIPE SIZE	LIST PRICE
Z546*	D.C.C.I. Body and Top	8″	2,522.00
		10″	2,615.00
		12″	2,738.00

OUTLETS (SPECIFY PIPE SIZE IN INCHES AND TYPE OF OUTLET)				
OUTLET	TYPE	PIPE SIZE/OUTLET TYPE	E BODY HT. DIM.	ADD
NH	No-Hub	8NH, 10NH, 12NH	7-5/16″	N/C
SUFFIXES				ADD
–F	Extension Frame - 1″-4″ (Specify Height)		D.C.	992.00
			Galv.	1,501.00
–G	Galvanized Cast Iron			1,330.00
–TS	Top Secured with Slotted Screws			212.00
–VP	Vandal-Proof Secured Top			241.00

Z547 21″ [533 MM] DIAMETER EXTRA HEAVY-DUTY HEEL-PROOF PARKING DECK DRAIN WITH SUPPORT FLANGE

ENGINEERING SPECIFICATION

Zurn Z547 21″ [533 mm] diameter parking deck drain features Dura-Coated cast iron body with bottom outlet, combination membrane flashing clamp with support flange, and extra heavy-duty, heel-proof, slotted grate.

A Pipe Size inch [mm]	Grate Open Area sq in [cm²]	Approximate Weight lb [kg]
8 [203]	112 [723]	163 [74]
10 [254]		
12 [305]		

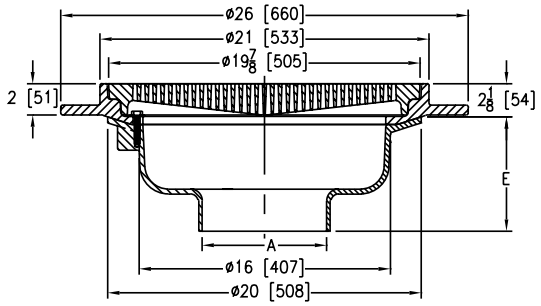

PREFIXES	DESCRIPTION	PIPE SIZE	LIST PRICE
Z547*	D.C.C.I. Body and Flange (with Duresist Grate)	8″	2,800.00
		10″	2,940.00
		12″	3,019.00

OUTLETS (SPECIFY PIPE SIZE IN INCHES AND TYPE OF OUTLET)				
OUTLET	TYPE	PIPE SIZE/OUTLET TYPE	E BODY HT. DIM.	ADD
NH	No-Hub	8NH, 10NH, 12NH	7-5/16″	N/C
SUFFIXES				ADD
–G	Galvanized Cast Iron			1,005.00
–TS	Top Secured with Slotted Screws			137.00
–VP	Vandal-Proof Secured top			137.00

*Regularly furnished unless otherwise specified.

This symbol denotes a product that is engineered to reduce installation and rework time.

For additional product information, please visit www.zurn.ca

Z550 9″ [229 MM] DIAMETER MEDIUM-DUTY DRAIN

ENGINEERING SPECIFICATION

Zurn Z550 9″ [229 mm] diameter top drain features Dura-Coated cast iron body with bottom outlet, seepage pan, and combination membrane flashing clamp and frame for medium-duty cast iron, heel-proof, slotted grate.

NOTES

†Add 3/16″ [5 mm] to 2″ [51 mm] dimension and 3/4″ [19 mm] to 9″ [229 mm] dimension for ZN

A Pipe Size inch [mm]	Grate Open Area sq in [cm²]	Approximate Weight lb [kg]
2 [51], 3 [76], 4 [102]	18 [116]	28 [13]
6 [152]		30 [14]

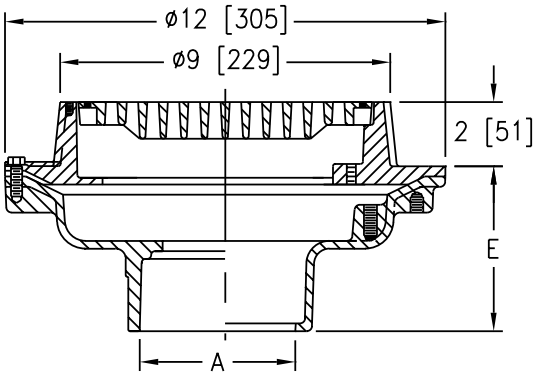

PREFIXES	DESCRIPTION	PIPE SIZE	LIST PRICE
Z550*	D.C.C.I. Body and Top	2″, 3″, 4″	599.00
		6″	714.00
ZN550	D.C.C.I. Body with Polished Nickel Bronze Top	2″, 3″, 4″	1,104.00
		6″	1,221.00

OUTLETS (SPECIFY PIPE SIZE IN INCHES AND TYPE OF OUTLET)

OUTLET	TYPE	PIPE SIZE/OUTLET TYPE	E BODY HT. DIM.	ADD
IC	Inside Caulk	3IC, 4IC	3-3/4″	N/C
IG	Inside Gasket	3IG, 4IG	3-3/4″	N/C
IP	Threaded	3IP, 4IP	2-3/4″	82.00
NH	No-Hub	2NH, 3NH, 4NH	4-3/4″	N/C
		6NH	5-1/4″	N/C
NL	Neo-Loc	2NL, 3NL, 4NL	3-1/2″	N/C

SUFFIXES			ADD
–AR	Acid Resisting Epoxy Coated Cast Iron		456.00
–D	Dome Grate	Z	132.00
		ZN	372.00
–G	Galvanized Cast Iron		316.00
–P	Trap Primer Connection		22.00
–S	Secondary Strainer		101.00
–SS	Stainless Mesh Liner for Bucket		517.00
–TC	Neo-Loc Test Cap Gasket (2″, 3″, 4″ NL Bottom Outlet Only)		116.00
–TG	Tractor Grate		141.00
–TS	Top Secured with Slotted Screws		137.00
–TSP	Trap Seal Protection Device (Size Matches Drain Outlet Selected, See Z1072)		POA
–VP	Vandal-Proof Secured Top		178.00
–Y	Sediment Bucket		POA
–90	90° Threaded Side Outlet Body Assembly (3″, 4″)		541.00

For additional product information, please visit www.zurn.ca

**Regularly furnished unless otherwise specified.*

This symbol denotes a product that is engineered to reduce installation and rework time.

Z551 9″ [229 MM] DIAMETER MEDIUM-DUTY DRAIN

ENGINEERING SPECIFICATION

Zurn Z551 9″ [229 mm] diameter top drain features Dura-Coated cast iron body with bottom outlet, seepage pan and combination membrane flashing clamp and frame with integrated trap primer and plug for medium-duty, cast iron, heel-proof, slotted, Duresist grate.

NOTES

†Add 3/16″ [5 mm] to 2″ [51 mm] dimension and 3/4″ [19 mm] to 9″ [229 mm] dimension for ZN

A Pipe Size inch [mm]	Grate Open Area sq in [cm²]	Approximate Weight lb [kg]
2 [51], 3 [76], 4 [102]	18 [116]	28 [13]
6 [152]		30 [14]

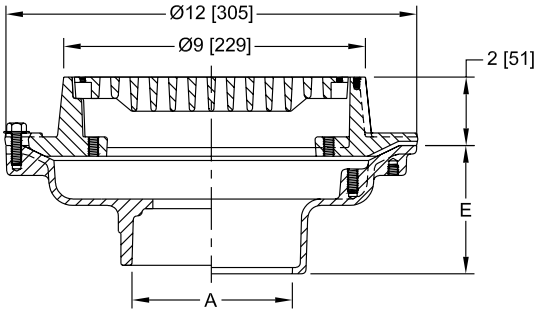

PREFIXES	DESCRIPTION	PIPE SIZE		LIST PRICE
Z551*	D.C.C.I. Body and Top	2″, 3″, 4″, 6″		511.00
ZN551	D.C.C.I. Body with Polished Nickel Bronze Top	2″, 3″, 4″, 6″		1,049.00
OUTLETS (SPECIFY PIPE SIZE IN INCHES AND TYPE OF OUTLET)				
OUTLET	**TYPE**	**PIPE SIZE/OUTLET TYPE**	**E BODY HT. DIM.**	**ADD**
IC	Inside Caulk	3IC, 4IC	3-3/4″	N/C
IG	Inside Gasket	3IG, 4IG	3-3/4″	N/C
IP	Threaded	3IP, 4IP	2-3/4″	82.00
NH	No-Hub	2NH, 3NH, 4NH	4-3/4″	N/C
		6NH	5-1/4″	N/C
NL	Neo-Loc	2NL, 3NL, 4NL	3-1/2″	N/C
SUFFIXES				**ADD**
–AR	Acid Resisting Epoxy Coated Cast Iron			456.00
–D	Dome Grate		Z	132.00
			ZN	381.00
–G	Galvanized Cast Iron			316.00
–S	Secondary Strainer			101.00
–SS	Stainless Mesh Liner for Bucket			517.00
–TC	Neo-Loc Test Cap Gasket (2″, 3″, 4″ NL Bottom Outlet Only)			116.00
–TG	Tractor Grate			141.00
–TS	Top Secured with Slotted Screws			137.00
–VP	Vandal-Proof Secured Top			178.00
–Y	Sediment Bucket			214.00
–90	90° Threaded Side Outlet Body Assembly (2″ thru 4″ Only)			541.00

Z554 9″ [229 MM] MEDIUM-DUTY DRAIN WITH SUR-SET BUCKET

ENGINEERING SPECIFICATION

Zurn Z554 9″ [229 mm] diameter top drain features Dura-Coated cast iron body with bottom outlet, seepage pan, combination membrane flashing clamp and frame, and medium-duty cast iron grate with Sur-Set bucket.

NOTES

†Add 3/16″ [5 mm] to 2″ [51 mm] dimension and 3/4″ [19 mm] to 9″ [229 mm] for ZN

A Pipe Size inch [mm]	Grate Open Area sq in [cm²]	Approximate Weight lb [kg]
2 [51], 3 [76], 4 [102]	9 [58]	21 [10]

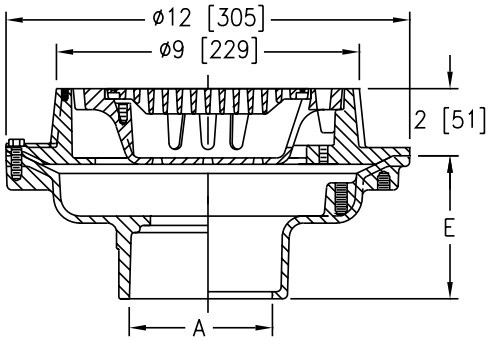

PREFIXES	DESCRIPTION	PIPE SIZE		LIST PRICE
Z554*	D.C.C.I. Body and Top	2″, 3″, 4″		599.00
ZN554	D.C.C.I. Body with Polished Nickel Bronze Top	2″, 3″, 4″		1,103.00
OUTLETS (SPECIFY PIPE SIZE IN INCHES AND TYPE OF OUTLET)				
OUTLET	**TYPE**	**PIPE SIZE/ OUTLET TYPE**	**E BODY HT. DIM.**	**ADD**
IP	Threaded	4IP	2-3/4″	82.00
NH	No-Hub	2NH, 3NH, 4NH	4-3/4″	N/C
NL	Neo-Loc	2NL, 3NL, 4NL	3-1/2″	N/C
SUFFIXES				**ADD**
–AR	Acid Resisting Epoxy Coated Cast Iron			534.00
–G	Galvanized Cast Iron			477.00
–TC	Neo-Loc Test Cap Gasket (2″, 3″, 4″ NL Bottom Outlet Only)			116.00
–TS	Top Secured with Slotted Screws			137.00
–VP	Vandal-Proof Secured Top			178.00

*Regularly furnished unless otherwise specified.

This symbol denotes a product that is engineered to reduce installation and rework time.

For additional product information, please visit www.zurn.ca

Z555 8″ [203 MM] HEAVY-DUTY FLOOR DRAIN WITH DEEP ANTI-TILT GRATE

ENGINEERING SPECIFICATION

Zurn Z555 8″ [203 mm] diameter heavy-duty floor drain, Dura-Coated cast iron bottom outlet body, seepage pan and combination membrane flashing clamp and frame for heavy-duty deep anti-tilt cast iron grate.

A Pipe Size inch [mm]	Grate Open Area sq in [cm²]	Approximate Weight lb [kg]
2 [51], 3 [76], 4 [102]	11 [71]	19 [9]
6 [152]		

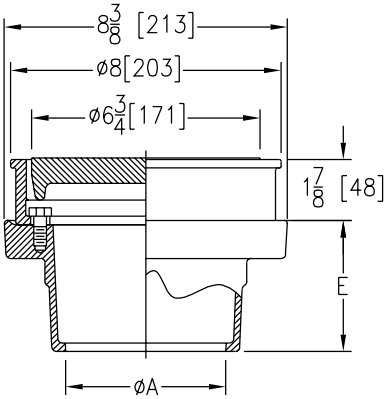

PREFIXES	DESCRIPTION	PIPE SIZE	LIST PRICE
Z555*	D.C.C.I. Body and Top	2″, 3″, 4″	333.00
		6″	624.00
ZN555	D.C.C.I. Body with Polished Nickel Bronze Top	2″, 3″, 4″	725.00
		6″	1,017.00

OUTLETS (SPECIFY PIPE SIZE IN INCHES AND TYPE OF OUTLET)				
OUTLET TYPE		PIPE SIZE/OUTLET TYPE	E BODY HT. DIM.	ADD
IC	Inside Caulk	2IC, 3IC, 4IC	3-7/8″ [98 mm]	N/C
IG	Inside Gasket	2IG, 3IG, 4IG	3-7/8″ [98 mm]	41.00
IP	Threaded	2IP, 3IP, 4IP, 6IP	2-5/8″ [67 mm]	98.00
NH	No-Hub	2NH, 3NH, 4NH	3-7/8″ [98 mm]	N/C
		6NH (IP with Z1040)	5-1/2″ [140 mm]	354.00
NL	Neo-Loc	2NL, 3NL, 4NL	4-5/8″ [117 mm]	41.00

SUFFIXES		ADD
–AR	Acid-Resisting Epoxy Coated Cast Iron	349.00
–FO	3-1/2″ x 9″ [89 mm x 229 mm] Funnel	160.00
–FS	Floating Slab	457.00
–G	Galvanized Cast Iron	457.00
–P	Trap Primer Connection	22.00
–TC	Neo-Loc Test Cap Gasket (2″-4″ [51 mm-102 mm] NL Bottom Outlet Only)	116.00
–TS	Top Secured with Slotted Screws	193.00
–V	Backwater Valve (See Z1099)	-
–VP	Vandal-Proof Secured Top	137.00
–Y	Sediment Bucket	53.00
–90	90° Threaded Side Outlet Body Assembly (3″ [76 mm], 4″ [102 mm])	194.00

For additional product information, please visit www.zurn.ca

**Regularly furnished unless otherwise specified.*

This symbol denotes a product that is engineered to reduce installation and rework time.

Z556 8″ [203 MM] ADJUSTABLE HEAVY-DUTY DRAIN

ENGINEERING SPECIFICATION

Zurn Z556 8″ [203 mm] diameter top drain features Dura-Coated cast iron body with bottom outlet, seepage pan, and combination membrane flashing clamp and frame for adjustable extension with heavy-duty, slotted, cast iron grate.

NOTES

†Add 3/16″ [5 mm] to 2-3/8″ [60 mm] through 3-1/8″ [79 mm] dimension for ZB and ZN

A Pipe Size inch [mm]	Grate Open Area sq in [cm²]	Approximate Weight lb [kg]
2 [51], 3 [76], 4 [102]	11 [71]	19 [9]

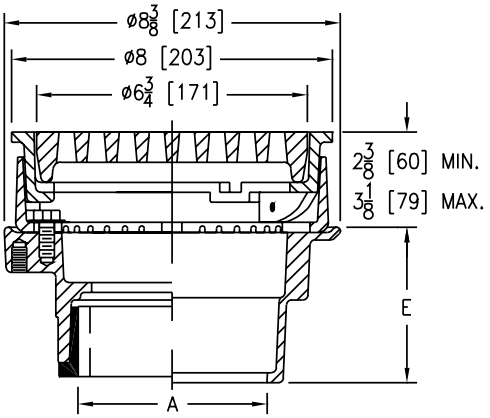

PREFIXES	DESCRIPTION	PIPE SIZE	LIST PRICE
Z556*	D.C.C.I. Body and Top	2″, 3″, 4″	401.00
ZN556	D.C.C.I. Body with Polished Nickel Bronze Top	2″, 3″, 4″	799.00

OUTLETS (SPECIFY PIPE SIZE IN INCHES AND TYPE OF OUTLET)

OUTLET	TYPE	PIPE SIZE/OUTLET TYPE	E BODY HT. DIM.	ADD
IP	Threaded	2IP, 3IP, 4IP	2-5/8″	98.00
NH	No-Hub	2NH, 3NH, 4NH	3-7/8″	N/C
NL	Neo-Loc	2NL, 3NL, 4NL	3-3/4″	N/C

SUFFIXES		ADD
–G	Galvanized Cast Iron	457.00
–P	Trap Primer Connection	22.00
–TS	Top Secured with Slotted Screws	193.00
–VP	Vandal-Proof Secured Top	137.00
–Y	Sediment Bucket	53.00

*Regularly furnished unless otherwise specified.

This symbol denotes a product that is engineered to reduce installation and rework time.

For additional product information, please visit www.zurn.ca

Z566 12″ [305 MM] SQUARE OPEN TOP DRAIN

ENGINEERING SPECIFICATION

Zurn Z566 12″ [305 mm] square open top drain features Dura-Coated cast iron body with bottom outlet and loose set cast iron secondary strainer.

NOTES

†Add 3/16″ [5 mm] to 'E' dimension for ZN

A Pipe Size inch [mm]	Approximate Weight lb [kg]
2 [51], 3 [76], 4 [102]	42 [19]

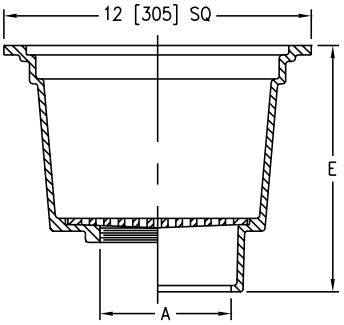

PREFIXES	DESCRIPTION	PIPE SIZE		LIST PRICE
Z566*	D.C.C.I. Body	2″, 3″, 4″		898.00
ZN566	D.C.C.I. Body with Polished Nickel Bronze Top	2″, 3″, 4″		1,639.00
OUTLETS (SPECIFY PIPE SIZE IN INCHES AND TYPE OF OUTLET)				
OUTLET TYPE		**PIPE SIZE/OUTLET TYPE**	**E BODY HT. DIM.**	**ADD**
IP	Threaded	3IP, 4IP	7-5/8″	82.00
NL	Neo-Loc	2NL, 3NL, 4NL	9″	N/C
SUFFIXES				**ADD**
–AR	Acid Resisting Epoxy Coated Cast Iron			805.00
–G	Galvanized Cast Iron			588.00
–GT	Top Grate		Z	198.00
			ZN	604.00
⏲ –TC	Neo-Loc Test Cap Gasket (2″, 3″, 4″ NL Bottom Outlet Only)			37.00
–Y	Sediment Bucket			249.00

Z575 6″ X 12″ [152 MM X 305 MM] MEDIUM-DUTY GUTTER DRAIN

ENGINEERING SPECIFICATION

Zurn Z575 6″ x 12″ [152 mm x 305 mm] top gutter drain features Dura-Coated cast iron body with bottom outlet and medium-duty, cast iron, anti-tilt, slotted grate.

NOTES

†Add 3/16″ [5 mm] to 'E' dimension for ZB and ZN

A Pipe Size inch [mm]	Grate Open Area sq in [cm²]	Approximate Weight lb [kg]
2 [51], 3 [76], 4 [102]	24 [155]	18 [8]

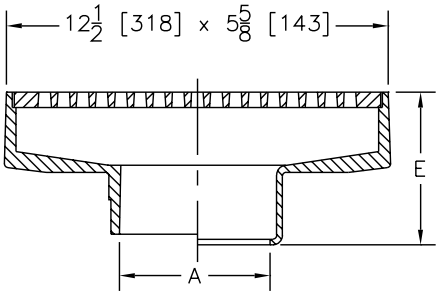

PREFIXES	DESCRIPTION	PIPE SIZE		LIST PRICE
Z575*	D.C.C.I. Body and Top	2″, 3″, 4″		784.00
ZB575	D.C.C.I. Body with Polished Bronze Top	2″, 3″, 4″		1,510.00
ZN575	D.C.C.I. Body with Polished Nickel Bronze Top	2″, 3″, 4″		1,558.00
OUTLETS (SPECIFY PIPE SIZE IN INCHES AND TYPE OF OUTLET)				
OUTLET TYPE		**PIPE SIZE/OUTLET TYPE**	**E BODY HT. DIM.**	**ADD**
IP	Threaded	2IP, 3IP, 4IP	3-5/8″	98.00
NH	No-Hub (IP w/Z1040)	3NH, 4NH	-	n/c
NL	Neo-Loc	3NL, 4NL	4-1/2″	41.00
SUFFIXES				**ADD**
–DG	Duresist Grate			313.00
–G	Galvanized Cast Iron			173.00
–K	Seepage Pan			578.00
–KC	Seepage Pan with Clamp Collar			668.00
⏲ –TC	Neo-Loc Test Cap Gasket (2″, 3″, 4″ NL Bottom Outlet Only)			116.00
–TS	Top Secured with Slotted Screws			59.00
–V	Backwater Valve (See Z1099)			-
–VP	Vandal-Proof Secured Top			156.00

For additional product information, please visit www.zurn.ca

**Regularly furnished unless otherwise specified.*

⏲ *This symbol denotes a product that is engineered to reduce installation and rework time.*

Z609 9" [229 MM] SQUARE HEAVY-DUTY DRAIN

ENGINEERING SPECIFICATION

Zurn Z609 9" [229 mm] square top drain features Dura-Coated cast iron body with bottom outlet, seepage pan, heavy-duty, cast iron, anti-tilt, slotted grate, and combination membrane flashing clamp and frame.

NOTES

†Add 3/16" [5 mm] to 2-7/16" [62 mm] dimension and 3/4" [19 mm] to 9" [229 mm] dimension for ZN

A Pipe Size inch [mm]	Grate Open Area sq in [cm²]	Approximate Weight lb [kg]
2 [51], 3 [76], 4 [102]	14 [90]	32 [15]

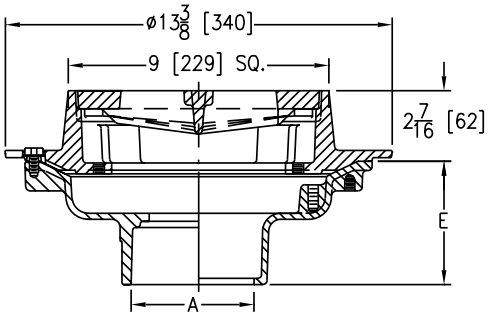

PREFIXES	DESCRIPTION	PIPE SIZE	LIST PRICE
Z609*	D.C.C.I. Body and Top	2", 3", 4"	832.00
ZN609	D.C.C.I. Body with Polished Nickel Bronze Top	2", 3", 4"	1,732.00

OUTLETS (SPECIFY PIPE SIZE IN INCHES AND TYPE OF OUTLET)				
OUTLET	TYPE	PIPE SIZE/OUTLET TYPE	E BODY HT. DIM.	ADD
IC	Inside Caulk	2IC, 3IC, 4IC	3-3/4"	N/C
IG	Inside Gasket	2IG, 3IG, 4IG	3-3/4"	N/C
IP	Threaded	2IP, 3IP, 4IP	2-3/4"	82.00
NH	No-Hub (IP w/Z1040)	2NH, 3NH, 4NH	4-3/4"	N/C
NL	Neo-Loc	2NL, 3NL, 4NL	3-1/2"	N/C

SUFFIXES		ADD
–AR	Acid Resisting Epoxy Coated Cast Iron	479.00
–DG	Duresist Grate	610.00
–F	2" High Extension (Per Inch)	292.00
–G	Galvanized Cast Iron	300.00
–GG	Galvanized Grate	204.00
–H	Hinged Grate	N/C
–HL	Hinged Locking Grate	552.00
–P	Trap Primer Connection (1/2"*)	22.00
–S	Secondary Strainer	103.00
–SC	Solid Cover	596.00
–SS	Stainless Steel Mesh Liner for Bucket	378.00
◷ –TC	Neo-Loc Test Cap Gasket (2", 3", 4" NL Bottom Outlet Only)	116.00
–TS	Top Secured with Slotted Screws	137.00
–V	Backwater Valve (See Z1099)	-
–VP	Vandal-Proof Secured Top	178.00
–Y	Sediment Bucket	214.00
–90	90° Threaded Side Outlet Body Assembly (2" thru 4" Only)	541.00

**Regularly furnished unless otherwise specified.*

◷ This symbol denotes a product that is engineered to reduce installation and rework time.

For additional product information, please visit www.zurn.ca

Z610 12-1/2" [318 MM] HEAVY-DUTY DRAIN

ENGINEERING SPECIFICATION

Zurn Z610 12-1/2" [318 mm] square top drain features Dura-Coated cast iron body with bottom outlet, seepage pan, and combination membrane flashing clamp and frame for heavy-duty, ductile iron, loose, slotted grate with suspended polypropylene sediment bucket.

NOTES

†Add 3/16" [5 mm] to 2-1/2" [64 mm] dimension and 3/4" [19 mm] to 12-1/2" [318 mm] dimension for ZN

A Pipe Size inch [mm]	Grate Open Area sq in [cm²]	Approximate Weight lb [kg]
2 [51], 3 [76], 4 [102], 6 [152]	42 [271]	54 [24]
8 [203]		56 [25]

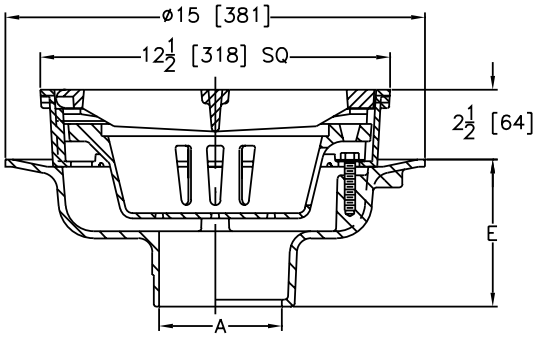

PREFIXES	DESCRIPTION	PIPE SIZE	LIST PRICE
Z610*	D.C.C.I. Body and Top	2", 3", 4", 6"	920.00
		8"	1,418.00
ZN610	D.C.C.I. Body with Polished Nickel Bronze Top	2", 3", 4", 6"	1,925.00
		8"	2,318.00

OUTLETS (SPECIFY PIPE SIZE IN INCHES AND TYPE OF OUTLET)

OUTLET	TYPE	PIPE SIZE/OUTLET TYPE	E BODY HT. DIM.	ADD
IC	Inside Caulk	3IC, 4IC, 6IC	5-1/4"	N/C
IG	Inside Gasket	3IG, 4IG, 6IG	5-1/4"	41.00
IP	Threaded	2IP, 3IP, 4IP, 6IP	3-3/4"	98.00
NH	No-Hub	2NH, 3NH, 4NH, 6NH, 8NH	5-1/4"	N/C
NL	Neo-Loc	2NL, 3NL, 4NL	4-5/8"	41.00

SUFFIXES		ADD
–AR	Acid Resisting Epoxy Coated Cast Iron	479.00
–DS	Ductile Iron Solid Cover	796.00
–DX	Dex-O-Tex Flange (ZN only)	1,240.00
–F	2" High Extension	292.00
–G	Galvanized Cast Iron	811.00
–H	Hinged Grate	252.00
–HC	Hinged Solid Cover	559.00
–HL	Hinged Locking Grate	553.00
–HLC	Hinged Locking Cover	607.00
–P	Trap Primer Connection	22.00
–S	Secondary Strainer	103.00
⏲ –SA	Stabilizer Assembly (See Z1036)	N/C
–SS	Stainless Mesh Liner for Bucket	517.00
⏲ –TC	Neo-Loc Test Cap Gasket (2", 3", 4" NL Bottom Outlet Only)	116.00
–TS	Top Secured with Slotted Screws	135.00
–TSP	Trap Seal Protection Device (Size Matches Drain Outlet Selected, See Z1072)	POA
–V	Backwater Valve (See Z1099)	-
–VP	Vandal-Proof Secured Top	178.00
–YC	Cast Iron Sediment Bucket	214.00
–90	90° Threaded Side Outlet Body Assembly	POA
		DEDUCT
–LY	Less Sediment Bucket	-64.00

For additional product information, please visit www.zurn.ca

**Regularly furnished unless otherwise specified.*

⏲ *This symbol denotes a product that is engineered to reduce installation and rework time.*

Z610-ADJ 12″ [305 MM] SQUARE HEAVY-DUTY ADJUSTABLE DRAIN

ENGINEERING SPECIFICATION

Zurn Z610-ADJ 12″ [305 mm] square top adjustable floor drain, Dura-Coated cast iron bottom outlet body, clamping collar, adjustable leveling frame, and heavy-duty grate.

NOTES

†Add 3/16″ [5 mm] to 2-11/16″ [69 mm] dimension and 3/4″ [19 mm] to 12-1/2″ [318 mm] dimension for ZB and ZN

A Pipe Size inch [mm]	Grate Open Area sq in [cm²]	Approximate Weight lb [kg]
2 [51], 3 [76], 4 [102], 6 [152], 8 [203], 10 [254]	42 [271]	72 [33]

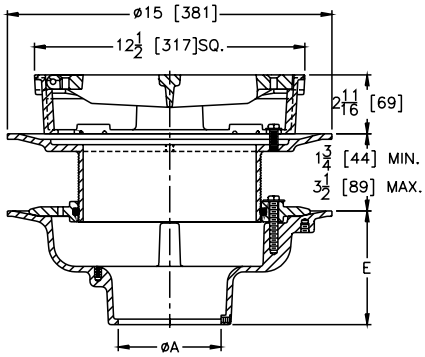

PREFIXES	DESCRIPTION	PIPE SIZE	LIST PRICE
Z610*	D.C.C.I. Body and Top	2″, 3″, 4″	1,481.00
		6″	1,715.00
		8″	1,801.00
		10″	1,801.00
ZN610	D.C.C.I. Body with Polished Nickel Bronze Top	2″, 3″, 4″	2,539.00
		6″	2,796.00
		8″	2,880.00
		10″	2,880.00

OUTLETS (SPECIFY PIPE SIZE IN INCHES AND TYPE OF OUTLET)

OUTLET TYPE		PIPE SIZE/OUTLET TYPE	E BODY HT. DIM.	ADD
IC	Inside Caulk	3IC, 4IC, 6IC	5-1/4″ [133 mm]	N/C
IG	Inside Gasket	3IG, 4IG, 6IG	5-1/4″ [133 mm]	41.00
IP	Threaded	2IP, 3IP, 4IP, 6IP	3-3/4″ [95 mm]	98.00
NH	No-Hub (IP w/ Z1040)	2NH, 3NH, 4NH, 6NH, 8NH	5-1/4″ [133 mm]	N/C
NL	Neo-Loc	2NL, 3NL, 4NL	4-5/8″ [117 mm]	41.00

SUFFIXES		ADD
–AR	Acid Resisting Epoxy Coated Cast Iron	781.00
–DG	Duresist Grate	610.00
–DS	Ductile Iron Solid Cover	796.00
–DX	Dex-O-Tex Flange (ZN only)	1,240.00
–G	Galvanized Cast Iron	811.00
–H	Hinged Grate	252.00
–HC	Hinged Solid Cover	559.00
–HL	Hinged Locking Grate	553.00
–HLC	Hinged Locking Cover	607.00
–P	Trap Primer Connection	22.00
–S	Secondary Strainer	103.00
◷ –SA	Stabilizer Assembly (See Z1036)	-
–SC	Solid Cover	508.00
–SS	Stainless Mesh Liner for Bucket	517.00
◷ –TC	Neo-Loc Test Cap Gasket (2″, 3″, 4″ NL Bottom Outlet Only)	116.00
–TS	Top Secured with Slotted Screws	135.00
–V	Backwater Valve (See Z1099)	-
–VP	Vandal-Proof Secured Top	178.00
–Y	Suspended Polypropylene Sediment Bucket	64.00
–YA	Aluminum Sediment Bucket	400.00
–YC	Cast Iron Sediment Bucket	214.00
–90	90° Threaded Side Outlet Body Assembly	POA

**Regularly furnished unless otherwise specified.*

◷ This symbol denotes a product that is engineered to reduce installation and rework time.

For additional product information, please visit www.zurn.ca

Z611 9″ [229 MM] MEDIUM-DUTY DRAIN

ENGINEERING SPECIFICATION

Zurn Z611 9″ [229 mm] square top drain features Dura-Coated cast iron body with bottom outlet, seepage pan, and combination membrane flashing clamp and frame for cast iron, medium-duty, slotted grate with suspended sediment bucket.

NOTES

†Add 3/16″ [5 mm] to 2″ [51 mm] and 9″ [229 mm] dimension for ZB and ZN

A Pipe Size inch [mm]	Grate Open Area sq in [cm²]	Approximate Weight lb [kg]
2 [51], 3 [76], 4 [102]	26 [168]	29 [13]

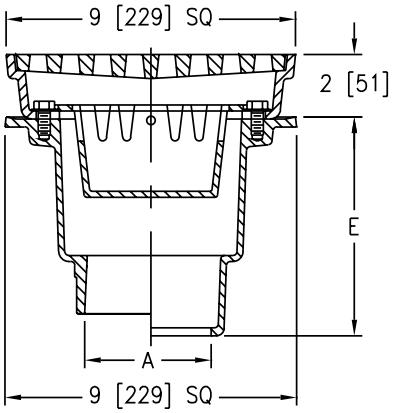

PREFIXES	DESCRIPTION	PIPE SIZE	LIST PRICE
Z611*	D.C.C.I. Body and Top	2″, 3″, 4″	988.00
ZB611	D.C.C.I. Body with Polished Bronze Top	2″, 3″, 4″	1,454.00
ZN611	D.C.C.I. Body with Polished Nickel Bronze Top	2″, 3″, 4″	1,626.00

OUTLETS (SPECIFY PIPE SIZE IN INCHES AND TYPE OF OUTLET)				
OUTLET	TYPE	PIPE SIZE/OUTLET TYPE	E BODY HT. DIM.	ADD
IP	Threaded	2IP, 3IP, 4IP	5″	82.00
NH	No-Hub (IP w/Z1040)	2NH, 3NH, 4NH	7-1/2″	N/C
NL	Neo-Loc	2NL, 3NL, 4NL	6-1/8″	N/C

SUFFIXES		ADD
–AR	Acid Resisting Epoxy Coated Cast Iron	479.00
–DG	Duresist Grate	610.00
–G	Galvanized Cast Iron	326.00
–P	Trap Primer Connection	22.00
–S	Secondary Strainer	103.00
◷ –TC	Neo-Loc Test Cap Gasket (2″, 3″, 4″ NL Bottom Outlet Only)	116.00
–V	Backwater Valve (See Z1099)	N/C
–VP	Vandal-Proof Secured Top	178.00
–90	90° Side Outlet Body Assembly (2″, 3″ Threaded Only)	541.00
		DEDUCT
–LY	Less Sediment Bucket	-15.00

For additional product information, please visit www.zurn.ca

**Regularly furnished unless otherwise specified.*

◷ *This symbol denotes a product that is engineered to reduce installation and rework time.*

Z624 ISOLATION DECK DRAIN

ENGINEERING SPECIFICATION

Zurn Z624 floating slab drain features Dura-Coated cast iron upper and lower bodies, clamp collar with weep holes, neoprene flex gasket, isolation nipple, and slotted grate.

NOTES

†Add 3/16″ [5 mm] to 4-15/16″ [125 mm] dimension for ZN

A Pipe Size inch [mm]	Grate Open Area sq in [cm²]	Approximate Weight lb [kg]
2 [51], 3 [76], 4 [102]	18 [116]	42 [19]
6 [152]		

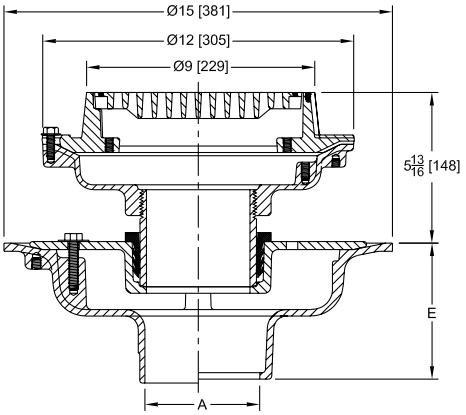

PREFIXES	DESCRIPTION	PIPE SIZE	LIST PRICE
Z624*	D.C.C.I. Body and Top	2″, 3″, 4″	1,059.00
		6″	1,210.00
ZN624	D.C.C.I. Body with Polished Nickel Bronze Top	2″, 3″, 4″	1,705.00
		6″	1,859.00

OUTLETS (SPECIFY PIPE SIZE IN INCHES AND TYPE OF OUTLET)				
OUTLET TYPE		PIPE SIZE/OUTLET TYPE	E BODY HT. DIM.	ADD
NH	No-Hub	2NH, 3NH, 4NH, 6NH	5-1/4″	N/C
NL	Neo-Loc	2NL, 3NL, 4NL	4-5/8″	N/C

SUFFIXES		ADD
–C	Underdeck Clamp (Lower Body)	170.00
–G	Galvanized Cast Iron	555.00
–R	Sump Receiver (Lower Body)	157.00
–TS	Top Secured with Slotted Screws	137.00
–VP	Vandal-Proof Secured Top	41.00
–Y	Sediment Bucket (Upper Body)	105.00

Z625 ADJUSTABLE ISOLATION DECK DRAIN

ENGINEERING SPECIFICATION

Zurn ZN625 adjustable isolation deck drain features Dura-Coated cast iron upper and lower bodies, upper and lower clamp collars, neoprene flex gasket, isolation nipple, and adjustable 6″ [152 mm] diameter nickel bronze strainer.

A Pipe Size inch [mm]	Grate Open Area sq in [cm²]	Approximate Weight lb [kg]
2 [51], 3 [76], 4 [102]	9 [58]	42 [19]
6 [152]		

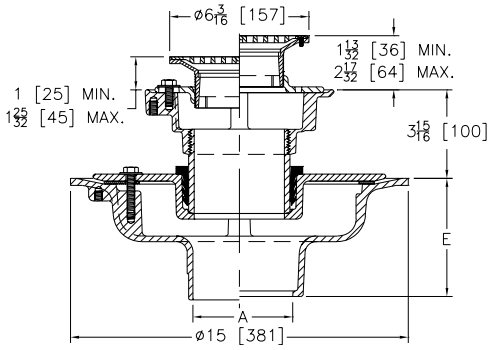

PREFIXES	DESCRIPTION	PIPE SIZE	LIST PRICE
ZN625*	D.C.C.I. Body with Polished Nickel Bronze Top	2″, 3″, 4″	1,195.00
		6″	1,347.00
ZB625	D.C.C.I. Body with Polished Bronze Top	2″, 3″, 4″	1,169.00
		6″	1,319.00

OUTLETS (SPECIFY PIPE SIZE IN INCHES AND TYPE OF OUTLET)				
OUTLET TYPE		PIPE SIZE/OUTLET TYPE	E BODY HT. DIM.	ADD
NH	No-Hub	2NH, 3NH, 4NH, 6NH	5-1/4″	N/C
NL	Neo-Loc	2NL, 3NL, 4NL	4-5/8″	N/C

SUFFIXES		ADD
–C	Underdeck Clamp (Lower Body)	170.00
–G	Galvanized Cast Iron	301.00
◷ –PC	Protective Cover	52.00
–R	Sump Receiver (Lower Body)	157.00
–U	3″ High Extension Adapter (Upper Body)	101.00
–VP	Vandal-Proof Secured Top	41.00
–Y	Sediment Bucket (Upper Body)	53.00

*Regularly furnished unless otherwise specified.

◷ *This symbol denotes a product that is engineered to reduce installation and rework time.*

For additional product information, please visit www.zurn.ca

Z627 HEAVY-DUTY ADJUSTABLE ISOLATION DECK DRAIN

ENGINEERING SPECIFICATION

Zurn Z627 adjustable isolation deck drain features Dura-Coated cast iron upper and lower bodies, clamp collar, neoprene flex gasket, isolation nipple, and 8″ [203 mm] diameter round, heavy-duty grate.

NOTES

†Add 3/16″ [5 mm] to 1-3/8″ [35 mm] through 3-5/8″ [92 mm] dimension and 3/4″ [19 mm] to 9″ [229 mm] dimension for ZN

A Pipe Size inch [mm]	Grate Open Area sq in [cm²]	Approximate Weight lb [kg]
2 [51], 3 [76], 4 [102]	18 [116]	65 [29]
6 [152]		

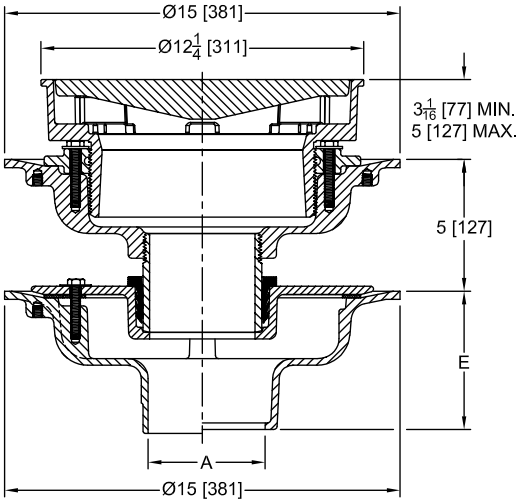

PREFIXES	DESCRIPTION	PIPE SIZE	LIST PRICE
Z627*	D.C.C.I. Body and Top	2″, 3″, 4″	1,158.00
		6″	1,355.00
ZN627	D.C.C.I. Body with Polished Nickel Bronze Top	2″, 3″, 4″	1,851.00
		6″	2,002.00

OUTLETS (SPECIFY PIPE SIZE IN INCHES AND TYPE OF OUTLET)

OUTLET	TYPE	PIPE SIZE/OUTLET TYPE	E BODY HT. DIM.	ADD
NH	No-Hub	2NH, 3NH, 4NH, 6NH	5-1/4″	N/C
NL	Neo-Loc	2NL, 3NL, 4NL	4-5/8″	N/C

SUFFIXES		ADD
–C	Underdeck Clamp (Lower Body)	170.00
–G	Galvanized Cast Iron	811.00
–R	Sump Receiver (Lower Body)	157.00
–TS	Top Secured with Slotted Screws	137.00
–VP	Vandal-Proof Secured Top	41.00

Z629 VERTICAL WALL DRAIN WITH BACKWATER VALVE

ENGINEERING SPECIFICATION

Zurn Z629 vertical wall drain features Dura-Coated cast iron body, bronze valve assembly, and secured slotted grate.

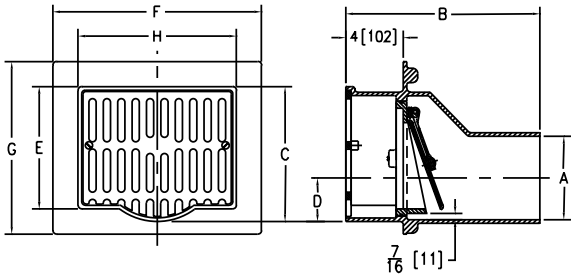

PREFIXES	DESCRIPTION	PIPE SIZE	LIST PRICE
Z629*	D.C.C.I. Body with Cast Iron Grate	3″, 4″	3,865.00
		6″	5,720.00
ZN629	D.C.C.I. Body with Polished Nickel Bronze Grate	3″, 4″	5,500.00
		6″	7,544.00
OUTLETS (SPECIFY PIPE SIZE IN INCHES AND TYPE OF OUTLET)			
OUTLET TYPE		**PIPE SIZE/OUTLET TYPE**	**ADD**
NH	No-Hub	3NH, 4NH, 6NH	N/C
SUFFIXES			**ADD**
–C	Clamping Collar		300.00
–G	Galvanized Cast Iron		1,055.00
–VP	Vandal-Proof Secured Top		219.00
			DEDUCT
–LV	Less Backwater Valve	3″, 4″	-402.00
		6″	-935.00

Dimensions in inches [mm]								Grate Open Area sq in [cm²]	Approximate Weight lb [kg]
A Pipe Size	B	C	D	E	F	G	H		
3 [76]	13 [330]	7-5/8 [178]	1-1/2 [38]	6-7/8 [175]	12-3/4 [324]	11 [279]	9-1/4 [235]	20 [129]	47 [21]
4 [102]			2 [51]						
6 [152]	13-1/2 [343]	9-3/8 [238]	3-1/8 [79]	8-1/2 [216]	14-1/2 [368]	12 [305]	11 [279]	33 [213]	58 [26]

Z645 12″ X 12″ [305 MM X 305 MM] EXTRA-HEAVY-DUTY DRAIN

ENGINEERING SPECIFICATION

Zurn Z645 12″ x 12″ [305 mm x 305 mm] top drain, Dura-Coated fabricated steel body with side outlet, internal trap with bronze cleanout plug, seepage pan and combination membrane flashing clamp and frame for cast iron hinged heavy-duty slotted grate.

NOTES

†Add 3/16″ [5 mm] to 2-3/4″ [70 mm] dimension for ZN

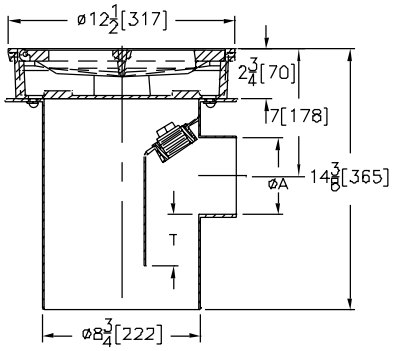

PREFIXES	DESCRIPTION	PIPE SIZE	LIST PRICE
Z645*	D.C.C.I. Body and Top	2″, 3″, 4″, 6″	1,920.00
ZN645	D.C.C.I. Body with Polished Nickel Bronze Top	2″, 3″, 4″, 6″	2,988.00
OUTLETS (SPECIFY PIPE SIZE IN INCHES AND TYPE OF OUTLET)			
OUTLET TYPE		**PIPE SIZE/OUTLET TYPE** / **E BODY HT. DIM.**	**ADD**
NH	No-Hub	2NH, 3NH, 4,NH, 6NH / 11-5/8″ [295 mm]	N/C
SUFFIXES			**ADD**
–DG	Duresist Grate		604.00
–G	Galvanized Cast Iron		806.00
–HL	Hinged Locking Grate		548.00
–P	Trap Primer Connection (Specify 1/2″ [13 mm] or 3/4″ [19 mm])		21.00
–VP	Vandal-Proof Secured Top		174.00
–Y	Suspended Polypropylene Sediment Bucket		212.00
–YA	Aluminum Sediment Bucket		396.00
–YC	Cast Iron Sediment Bucket		212.00

A Pipe Size inch [mm]	Grate Open Area sq in [cm²]	Approximate Weight lb [kg]
2 [51], 3 [76], 4 [102], 6 [152]	44 [284]	51 [23]

*Regularly furnished unless otherwise specified.

This symbol denotes a product that is engineered to reduce installation and rework time.

For additional product information, please visit www.zurn.ca

Z662 16″ [152 MM] HEAVY-DUTY DRAIN

ENGINEERING SPECIFICATION

Zurn Z662 16″ [152 mm] square top drain features Dura-Coated cast iron body with bottom outlet, seepage pan, and combination membrane flashing clamp and frame for heavy-duty, slotted, loose grate with suspended sediment bucket.

NOTES

†Add 3/16″ [5 mm] to 3-3/8″ [86 mm] through 3-5/8″ [92 mm] dimension and 11/16″ [17 mm] to 16″ [152 mm] dimension for ZB and ZN

A Pipe Size inch [mm]	Grate Open Area sq in [cm²]	Approximate Weight lb [kg]
3 [76], 4 [102]	53 [342]	95 [43]
6 [152]		98 [44]

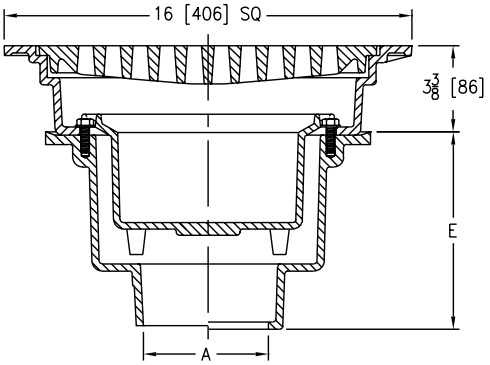

PREFIXES	DESCRIPTION	PIPE SIZE	LIST PRICE
Z662*	D.C.C.I. Body and Top	3″, 4″, 6″	2,142.00
ZB662	D.C.C.I. Body with Polished Bronze Top	3″, 4″, 6″	3,644.00
ZN662	D.C.C.I. Body with Polished Nickel Bronze Top	3″, 4″, 6″	3,754.00

OUTLETS (SPECIFY PIPE SIZE IN INCHES AND TYPE OF OUTLET)

OUTLET	TYPE	PIPE SIZE/OUTLET TYPE	E BODY HT. DIM.	ADD
IC	Inside Caulk	4IC, 6IC	7-3/4″	N/C
IG	Inside Caulk w/ Sealtrol Gasket	4IG, 6IG	7-3/4″	N/C
IP	Threaded	4IP, 6IP	6-5/16″	84.00
NH	No-Hub	3NH, 4NH, 6NH	7-13/16″	N/C
NL	Neo-Loc	3NL, 4NL	7-3/16″	N/C

SUFFIXES		ADD
–DG	Duresist Grate	722.00
–G	Galvanized Cast Iron	775.00
–HP	Heel-Proof Grate	553.00
◷ –PK	Precast Kit	469.00
–SS	Stainless Steel Mesh Liner for Bucket	517.00
◷ –TC	Neo-Loc Test Cap Gasket (3″, 4″ Bottom Outlet Only)	116.00
–TS	Top Secured with Slotted Screws	137.00
–TSP	Trap Seal Protection Device (Size Matches Drain Outlet Selected, See Z1072)	POA
–VP	Vandal-Proof Secured Top	178.00
–YA	Aluminum Sediment Bucket	398.00
		DEDUCT
–LY	Less Sediment Bucket	-68.00

For additional product information, please visit www.zurn.ca

**Regularly furnished unless otherwise specified.*

◷ *This symbol denotes a product that is engineered to reduce installation and rework time.*

Z662-HF 16″ [152 MM] HEAVY-DUTY DRAIN WITH HIGH FLOW DUCTILE IRON GRATE

ENGINEERING SPECIFICATION

Zurn Z662-HF 16″ [152 mm] square top drain features Dura-Coated cast iron body with bottom outlet, seepage pan, and combination membrane flashing clamp and frame for heavy-duty, high flow ductile iron grate with suspended sediment bucket.

NOTES

†Add 3/16″ [5 mm] to 3-3/8″ [86 mm] through 3-5/8″ [92 mm] dimension and 11/16″ [17 mm] to 16″ [152 mm] dimension for ZB and ZN

A Pipe Size inch [mm]	Grate Open Area sq in [cm²]	Approximate Weight lb [kg]
3 [76], 4 [102]	103 [665]	86 [39]
6 [152]		89 [40]

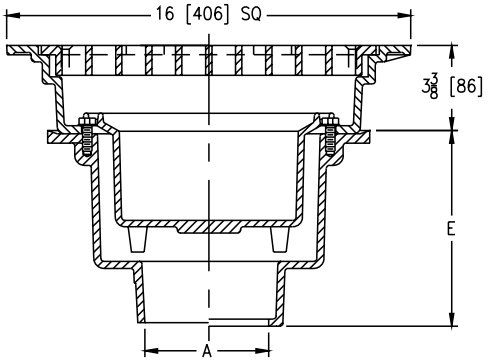

PREFIXES	DESCRIPTION	PIPE SIZE	LIST PRICE
Z662-HF*	D.C.C.I. Body and Top	3″, 4″, 6″	3,456.00
ZN662-HF	D.C.C.I. Body with Polished Nickel Bronze Top	3″, 4″, 6″	5,221.00

OUTLETS (SPECIFY PIPE SIZE IN INCHES AND TYPE OF OUTLET)				
OUTLET TYPE		PIPE SIZE/OUTLET TYPE	E BODY HT. DIM.	ADD
IC	Inside Caulk	4IC, 6IC	7-3/4″	N/C
IG	Inside Caulk w/ Sealtrol Gasket	4IG, 6IG	7-3/4″	N/C
IP	Threaded	4IP, 6IP	6-5/16″	84.00
NH	No-Hub	3NH, 4NH, 6NH	7-13/16″	N/C
NL	Neo-Loc	3NL, 4NL	7-3/16″	N/C

SUFFIXES		ADD
–SS	Stainless Steel Mesh Liner for Bucket	437.00
⏲ –TC	Neo-Loc Test Cap Gasket (3″, 4″ Bottom Outlet Only)	24.00
–TS	Top Secured with Slotted Screws	135.00
–VP	Vandal-Proof Secured Top	157.00
–YA	Aluminum Sediment Bucket	400.00
		DEDUCT
–LY	Less Sediment Bucket	(68.00)

*Regularly furnished unless otherwise specified.

⏲ *This symbol denotes a product that is engineered to reduce installation and rework time.*

For additional product information, please visit www.zurn.ca

Z664 6″ [152 MM] WIDE HEAVY-DUTY MODULAR TRENCH DRAIN

ENGINEERING SPECIFICATION

Zurn Z664 6″ [152 mm] wide top modular trench drain features Dura-Coated cast iron drain section with bottom outlet and secondary dome strainer. Both 12″ [305 mm] long outlet module and extension modules are complete with integral seepage pan and loose heavy-duty, slotted, heel-proof grate.

NOTES

†Add 1/8″ [203 mm] to 'E' and 2″ [51 mm] dimension for ZB and ZN

A Pipe Size inch [mm]	Grate Open Area sq in [cm²]	Approximate Weight lb [kg]
2 [51], 3 [76], 4 [102]	14 [90]	35 [16]

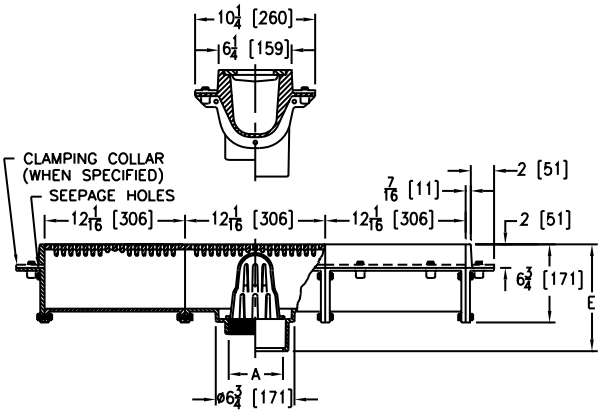

PREFIXES	DESCRIPTION	PIPE SIZE	LIST PRICE
Z664*	D.C.C.I. Body and Top	2″, 3″, 4″	1,524.00
ZB664	D.C.C.I. Body with Polished Bronze Top	2″, 3″, 4″	2,275.00
ZN664	D.C.C.I. Body With Veneers (304SS Standard)	2″, 3″, 4″	2,398.00

OUTLETS (SPECIFY PIPE SIZE IN INCHES AND TYPE OF OUTLET)				
OUTLET	TYPE	PIPE SIZE/OUTLET TYPE	E BODY HT. DIM.	ADD
IC	Inside Caulk	2IC, 3IC, 4IC	9-1/8″	N/C
IP	Threaded	2IP, 3IP, 4IP	9-1/8″	84.00
NH	No-Hub (IP w/Z1040)	2NH, 3NH, 4NH	-	N/C
NL	Neo-Loc	2NL, 3NL, 4NL	8-3/8″	N/C

SUFFIXES			ADD
–AR	Acid Resisting Epoxy Coated Cast Iron (Per Section)		563.00
–C	Clamp Collar (Per Section)		161.00
–DG	Duresist Grate (Per Section)		334.00
–ES	12″ Extension Section (Specify Number of Sections Required)	Z	1,524.00
		ZB	2,275.00
		ZN	2,398.00
–G	Galvanized Cast Iron (Per Section)		330.00
–M	Side Outlet Adapter Via End Plate		300.00
◷ –SQ	Square Hole Grate (Per Section) (Z Only)		809.00
–V	Backwater Valve (See Z1099) (Per Outlet)		-
–VP	Vandal-Proof Secured Top (Per Section)		249.00
–Y	Sediment Bucket (Per Outlet Section)		301.00

For additional product information, please visit www.zurn.ca

**Regularly furnished unless otherwise specified.*

◷ This symbol denotes a product that is engineered to reduce installation and rework time.

Z665 12" [305 MM] WIDE HEAVY-DUTY MODULAR TRENCH DRAIN

ENGINEERING SPECIFICATION

Zurn Z665 12" [305 mm] wide top modular trench drain features Dura-Coated cast iron deep sump body with bottom outlet. Both 12" [305 mm] long outlet module and extension modules are complete with integral seepage pan and heavy-duty, loose, slotted grate.

NOTES

†Add 1/8" [203 mm] to 'E' and 2" [51 mm] dimension for ZB and ZN

A Pipe Size inch [mm]	Grate Open Area sq in [cm²]	Approximate Weight lb [kg]
2 [51], 3 [76], 4 [102]	35 [226]	100 [45]
5 [127], 6 [152]		110 [50]

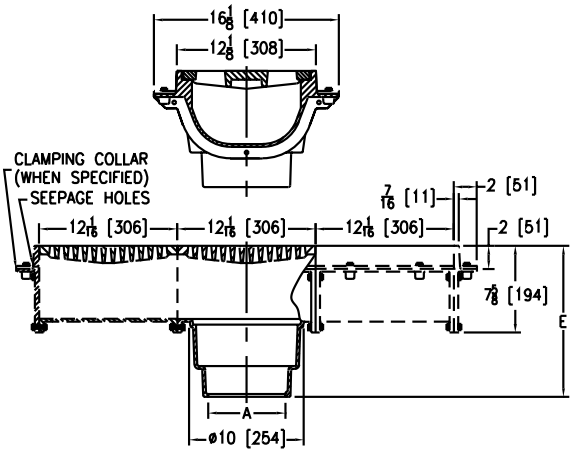

PREFIXES	DESCRIPTION	PIPE SIZE	LIST PRICE
Z665*	D.C.C.I. Body and Top	2", 3", 4", 5", 6"	2,008.00
ZB665	D.C.C.I. Body with Polished Bronze Top	2", 3", 4", 5", 6"	2,997.00
ZN665	D.C.C.I. Body With Veneers (304SS Standard)	2", 3", 4", 5", 6"	3,149.00

OUTLETS (SPECIFY PIPE SIZE IN INCHES AND TYPE OF OUTLET)

OUTLET TYPE		PIPE SIZE/OUTLET TYPE	E BODY HT. DIM.	ADD
IC	Inside Caulk	2IC, 3IC, 4IC, 5IC, 6IC	13-3/16"	N/C
IG	Inside Caulk w/ Sealtrol Gasket	2IG, 3IG, 4IG, 6IG	13-3/16"	N/C
NL	Neo-Loc	2NL, 3NL, 4NL	12-1/2"	N/C

SUFFIXES			ADD
–AR	Acid Resisting Epoxy Coated Cast Iron (Per Section)		825.00
–C	Clamp Collar (Per Section)		161.00
–DB	Bottom Dome Strainer (Per Outlet Section)		292.00
–DG	Duresist Grate (Per Section)		734.00
–ES	12" Extension Section (Specify Number of Sections Required)	Z	2,008.00
		ZB	2,997.00
		ZN	3,149.00
–G	Galvanized Cast Iron (Per Section)		660.00
–M	Side Outlet Adapter Via End Plate		395.00
–SB	Shallow Body (Bucket not available with this option.)		N/C
–SQ	Square Slotted Medium-Duty Grate (Per Section)		N/C
–TC	Neo-Loc Test Cap Gasket (2", 3", 4" NL Bottom Outlet Only)		809.00
–VP	Vandal-Proof Secured Top (Per Section)		249.00
–Y	Sediment Bucket (Per Outlet Section)		301.00

*Regularly furnished unless otherwise specified.

This symbol denotes a product that is engineered to reduce installation and rework time.

For additional product information, please visit www.zurn.ca

Z667 6″ [152 MM] WIDE MEDIUM-DUTY MODULAR TRENCH DRAIN

ENGINEERING SPECIFICATION

Zurn Z667 6″ [152 mm] wide top sectional trench drain features Dura-Coated cast iron bottom outlet section, vertically and horizontally adjustable in cast iron drain section, with seepage pan and membrane clamp. Both 15″ [381 mm] long outlet module section and extension modules are complete with loose, medium-duty, slotted grate.

NOTES

†Add 1/8″ [203 mm] to 'E' dimension for ZN

A Pipe Size inch [mm]	Grate Open Area sq in [cm²]	Approximate Weight lb [kg]
3 [76], 4 [102]	27 [174]	40 [18]

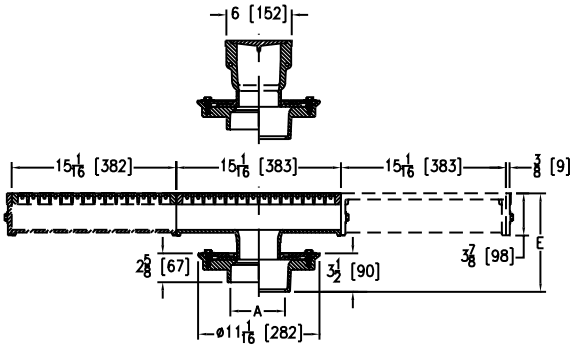

PREFIXES	DESCRIPTION	PIPE SIZE		LIST PRICE
Z667*	D.C.C.I. Body and Top	3″, 4″		1,038.00
ZN667	D.C.C.I. Body with Polished Nickel Bronze Top	3″, 4″		2,329.00
OUTLETS (SPECIFY PIPE SIZE IN INCHES AND TYPE OF OUTLET)				
OUTLET	**TYPE**	**PIPE SIZE/ OUTLET TYPE**	**E BODY HT. DIM.**	**ADD**
NL	Neo-Loc	3NL, 4NL	7-15/16″ min.; 8-11/16″ max.	N/C
SUFFIXES				**ADD**
–AR	Acid Resisting Epoxy Coated Cast Iron (Per Section)			825.00
–ES	15″ Extension Section (Specify Number of Sections Required)		Z	1,038.00
			ZN	2,329.00
–G	Galvanized Cast Iron (Per Section)			318.00
⏲ –TC	Neo-Loc Test Cap Gasket (3″, 4″ NL Bottom Outlet Only)			28.00
–TS	Top Secured with Slotted Screws (Per Section)			187.00
–VP	Vandal-Proof Secured Top (Per Section)			249.00

Z668 11-1/4″ X 19-1/4″ [279 MM X 483 MM] HEAVY-DUTY DRAIN

ENGINEERING SPECIFICATION

Zurn Z668 11-1/4″ x 19-1/4″ [279 mm x 483 mm] top drain features Dura-Coated cast iron body with bottom outlet, less seepage pan, secondary strainer, and loose, heavy-duty, slotted grate.

A Pipe Size inch [mm]	Grate Open Area sq in [cm²]	Approximate Weight lb [kg]
4 [102], 6 [152]	60 [387]	115 [52]

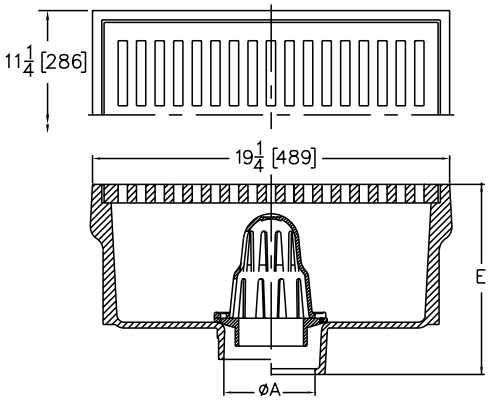

PREFIXES	DESCRIPTION	PIPE SIZE		LIST PRICE
Z668*	D.C.C.I. Body and Top	4″, 6″		6,476.00
OUTLETS (SPECIFY PIPE SIZE IN INCHES AND TYPE OF OUTLET)				
OUTLET	**TYPE**	**PIPE SIZE/OUTLET TYPE**	**E BODY HT. DIM.**	**ADD**
IC	Inside Caulk	4IC	10-1/4″	N/C
IG	Inside Caulk w/ Sealtrol Gasket	4IG	10-1/4″	N/C
IP	Threaded	4IP, 6IP	8-5/8″	82.00
NH	No-Hub (IP w/Z1040)	4NH, 6NH	11-1/8″	N/C
NL	Neo-Loc	4NL	9-1/2″	N/C
SUFFIXES				**ADD**
–AR	Acid Resisting Epoxy Coated Cast Iron			4,086.00
–DG	Duresist Grate			1,995.00
–G	Galvanized Cast Iron			3,390.00
⏲ –TC	Neo-Loc Test Cap Gasket (4″ NL Bottom Outlet Only)			31.00
–TS	Top Secured with Slotted Screws			187.00
–V	Backwater Valve (See Z1099)			-
–VP	Vandal-Proof Secured Top			301.00

For additional product information, please visit www.zurn.ca

**Regularly furnished unless otherwise specified.*

⏲ *This symbol denotes a product that is engineered to reduce installation and rework time.*

Z673 29″ X 30″ [737 MM X 762 MM] EXTRA HEAVY-DUTY DRAIN

ENGINEERING SPECIFICATION

Zurn Z673 29″ x 30″ [737 mm x 762 mm] top drain features Dura-Coated cast iron body with bottom outlet, seepage pan, and combination membrane flashing clamp and frame for cast iron, extra heavy-duty, loose, slotted grate with suspended sediment bucket.

A Pipe Size inch [mm]	Grate Open Area sq in [cm²]	No. of Grates	Approximate Weight lb [kg]
4 [102]	166 [1071]	2	294 [133]
6 [152]			314 [142]

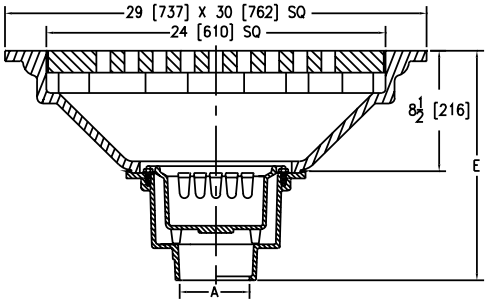

PREFIXES	DESCRIPTION	PIPE SIZE		LIST PRICE
Z673*	D.C.C.I. Body and Top	4″, 6″		15,415.00
OUTLETS (SPECIFY PIPE SIZE IN INCHES AND TYPE OF OUTLET)				
OUTLET	**TYPE**	**PIPE SIZE/OUTLET TYPE**	**E BODY HT. DIM.**	**ADD**
IP	Threaded	4IP	14-5/8″	82.00
NH	No-Hub	4NH, 6NH	16-1/4″	N/C
SUFFIXES				**ADD**
–DG	Duresist Grate			534.00
–G	Galvanized Cast Iron			1,781.00
–SS	Stainless Steel Mesh Liner for Bucket			517.00
–TS	Top Secured with Slotted Screws			137.00
–VP	Vandal-Proof Secured Top			178.00

Z675 13-1/2″ [343 MM] EXTRA HEAVY-DUTY DRAIN

ENGINEERING SPECIFICATION

Zurn Z675 13-1/2″ [343 mm] square top drain features Dura-Coated cast iron body with bottom outlet, seepage pan, and vertically adjustable, four-position frame for Duresist extra heavy-duty, loose, slotted grate with suspended sediment bucket.

A Pipe Size inch [mm]	Grate Open Area sq in [cm²]	Approximate Weight lb [kg]
3 [76], 4 [102], 6 [152]	72 [465]	110 [50]

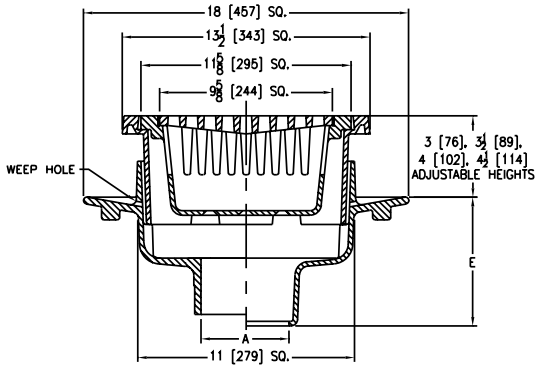

PREFIXES	DESCRIPTION	PIPE SIZE		LIST PRICE
Z675*	D.C.C.I. Body and Duresist Top	3″, 4″, 6″		2,522.00
OUTLETS (SPECIFY PIPE SIZE IN INCHES AND TYPE OF OUTLET)				
OUTLET	**TYPE**	**PIPE SIZE/OUTLET TYPE**	**E BODY HT. DIM.**	**ADD**
IC	Inside Caulk	4IC	7-1/8″	N/C
IG	Inside Gasket	4IG	7-1/8″	N/C
IP	Threaded	3IP, 4IP, 6IP	7-1/8″	82.00
NH	No-Hub (IP w/ Z1040)	3NH, 4NH, 6NH	9-5/8″	N/C
NL	Neo-Loc	3NL, 4NL	7-5/8″	N/C
SUFFIXES				**ADD**
–AR	Acid Resisting Epoxy Coated Cast Iron			576.00
–C	Clamp Collar			158.00
–G	Galvanized Cast Iron			435.00
–TS	Top Secured with Slotted Screws			137.00
–VP	Vandal-Proof Secured Top			178.00

**Regularly furnished unless otherwise specified.*

This symbol denotes a product that is engineered to reduce installation and rework time.

For additional product information, please visit www.zurn.ca

Z676 13-1/2" [343 MM] EXTRA HEAVY-DUTY DRAIN

ENGINEERING SPECIFICATION

Zurn Z676 13-1/2" [343 mm] square top drain features Dura-Coated cast iron body with bottom outlet, seepage pan, and vertically adjustable, four-position frame for Duresist extra heavy-duty, loose, slotted grate.

NOTES

†Add 3/4" [19 mm] to 13-1/2" [343 mm] dimension and 3/16" [5 mm] to 'E' dimension for ZN

A Pipe Size inch [mm]	Grate Open Area sq in [cm²]	Approximate Weight lb [kg]
3 [76], 4 [102], 6 [152]	72 [465]	95 [43]

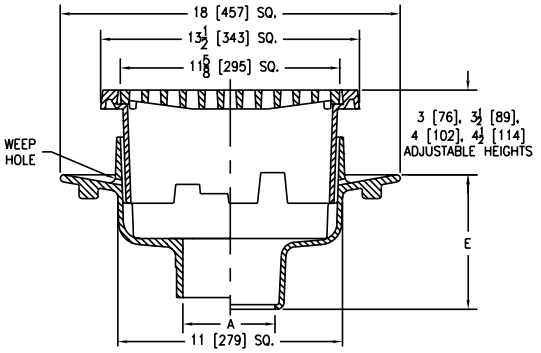

PREFIXES	DESCRIPTION	PIPE SIZE		LIST PRICE
Z676*	D.C.C.I. Body and Top	3", 4", 6"		3,298.00
ZN676	D.C.C.I. Body with Polished Nickel Bronze Top	3", 4", 6"		5,654.00
OUTLETS (SPECIFY PIPE SIZE IN INCHES AND TYPE OF OUTLET)				
OUTLET	**TYPE**	**PIPE SIZE/OUTLET TYPE**	**E BODY HT. DIM.**	**ADD**
IC	Inside Caulk	4IC	7-1/8"	N/C
IG	Inside Gasket	4IG	7-1/8"	N/C
IP	Threaded	3IP, 4IP, 6IP	7-1/8"	82.00
NH	No-Hub (IP w/Z1040)	3NH, 4NH, 6NH	9-5/8"	N/C
NL	Neo-Loc	3NL, 4NL	7-5/8"	47.00
SUFFIXES				**ADD**
–AR	Acid Resisting Epoxy Coated Cast Iron			572.00
–C	Clamp Collar			158.00
–G	Galvanized Cast Iron			435.00
–TS	Top Secured with Slotted Screws			137.00
–VP	Vandal-Proof Secured Top			178.00
–Y	Sediment Bucket			214.00

Z730 9" [229 MM] TOP MEDIUM-DUTY DRAIN

ENGINEERING SPECIFICATION

Zurn Z730 9" [229 mm] diameter top drain features Dura-Coated cast iron body with integral double wall trap and side outlet, bronze floor level cleanout plug, and medium-duty, loose, slotted grate.

NOTES

†Add 3/16" [5 mm] to M and E dimensions for ZN

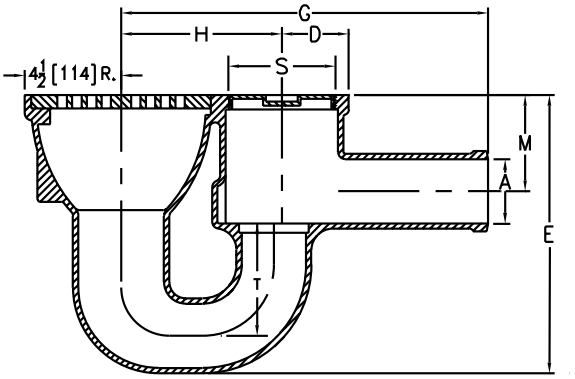

PREFIXES	DESCRIPTION	PIPE SIZE		LIST PRICE
Z730*	D.C.C.I. Body and Top	3"		2,342.00
		4"		2,478.00
ZN730	D.C.C.I. Body with Polished Nickel Bronze Top	3"		3,595.00
		4"		3,750.00
OUTLETS (SPECIFY PIPE SIZE IN INCHES AND TYPE OF OUTLET)				
OUTLET	**TYPE**	**PIPE SIZE/OUTLET TYPE**	**E BODY HT. DIM.**	**LIST PRICE**
SP	Spigot	3SP	13"	N/C
		4SP	16"	N/C
SUFFIXES				**ADD**
–DG	Duresist Grate			591.00
–G	Galvanized Cast Iron			477.00
–J	Auxiliary Inlet Connection			121.00
–K	Anchor Flange			428.00
–P	Trap Primer Connection			22.00
–V	Backwater Valve (See Z1099)		3"	515.00
			4"	581.00
–VP	Vandal-Proof Secured Top			134.00
–Y	Sediment Bucket			250.00

Dimensions in inches [mm]							Grate Open Area sq in [cm²]	Approximate Weight lb [kg]
A Pipe Size	Cleanout Plug Size S	Rad. D	G	H	M	T		
3 [76]	4-1/2 [114] NPT	3-1/8 [79]	17-1/8 [203]	7-1/2 [191]	4-1/4 [108]	4 [102]	23 [148]	54 [24]
4 [102]	5-1/2 [140] NPT	3-5/8 [92]	19-3/8 [238]		4-3/4 [121]	5 [127]		79 [36]

For additional product information, please visit www.zurn.ca

**Regularly furnished unless otherwise specified.*

This symbol denotes a product that is engineered to reduce installation and rework time.

Z742 LIGHT-DUTY TRAP DRAIN

ENGINEERING SPECIFICATION

Zurn Z742 8″ [203 mm], 10″ [254 mm] or 12″ [305 mm] diameter top drain features Dura-Coated cast iron body with integral double wall trap and side outlet, ball float type backwater valve, internal bronze cleanout, and light-duty, loose, slotted grate.

NOTES

†Add 3/16″ [5 mm] to 'E' dimension for ZB and ZN

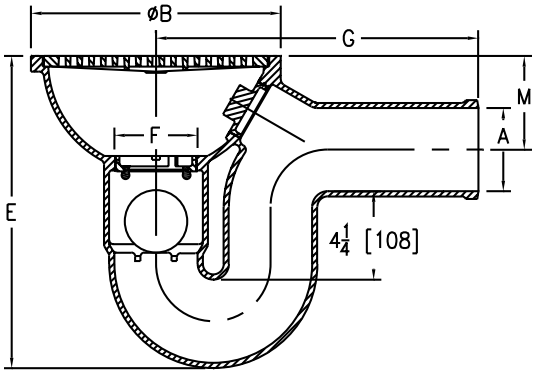

PREFIXES	DESCRIPTION	PIPE SIZE	LIST PRICE
Z742*	D.C.C.I. Body and Top	2″	835.00
		3″	1,158.00
		4″	1,623.00
ZB742	D.C.C.I. Body with Polished Bronze Top	2″	1,333.00
		3″	1,672.00
		4″	2,758.00
ZN742	D.C.C.I. Body with Polished Nickel Bronze Top	2″	1,372.00
		3″	1,722.00
		4″	2,844.00

OUTLETS (SPECIFY PIPE SIZE IN INCHES AND TYPE OF OUTLET)				
OUTLET TYPE		PIPE SIZE/OUTLET TYPE	E BODY HT. DIM.	LIST PRICE
SP	Spigot	2SP	10-3/4″	N/C
		3SP	12-3/4″	N/C
		4SP	15″	N/C
SUFFIXES				ADD
–G	Galvanized Cast Iron			477.00
–TS	Top Secured with Slotted Screws			116.00
–VP	Vandal-Proof Secured Top			134.00
				DEDUCT
–LV	Less Backwater Valve		2″	-68.00
			3″, 4″	-135.00

Dimensions in inches [mm]					Grate Open Area sq in [cm²]	Approximate Weight lb [kg]
A Pipe Size	F	B	G	M		
2 [51]	2 [51]	8-1/4 [210]	10-1/8 [203]	3-1/2 [89]	13 [84]	17 [8]
3 [76]	3-1/2 [89]	10-1/2 [267]	12-1/2 [318]	4 [102]	19 [122]	36 [16]
4 [102]		12 [305]	15-1/2 [140]	4-1/2 [114]	40 [258]	54 [24]

*Regularly furnished unless otherwise specified.

This symbol denotes a product that is engineered to reduce installation and rework time.

For additional product information, please visit www.zurn.ca

ZF799 HEAVY-DUTY CATCH BASIN DRAIN

ENGINEERING SPECIFICATION

Zurn ZF-799-76 20" x 22" [508 mm x 559 mm] heavy-duty single outlet or double outlet/inlet catch basin drain, Dura-Coated body, and heavy-duty cast iron grate.

A Pipe Size inch [mm]	Grate Open Area sq in [cm²]	Approximate Weight lb [kg]
3 [76], 4 [102], 6 [152]	143 [922]	184 [83]

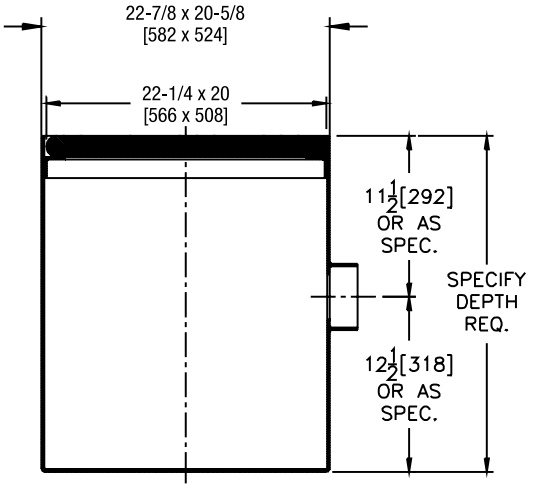

PREFIXES	DESCRIPTION	OUTLET TYPE		LIST PRICE
ZF-799	D.C.C.I. Body and Grate	Single Outlet	-75	9,489.00
		Outlet and Inlet	-76	9,708.00

OUTLETS (SPECIFY PIPE SIZE IN INCHES AND TYPE OF OUTLET)			
OUTLET TYPE		PIPE SIZE/OUTLET TYPE	LIST PRICE
NH	No-Hub	3NH, 4NH, 6NH	N/C

SUFFIXES		ADD
–AF	Anchor Flange	372.00
–E	Each Additional 12" [305 mm] Height	812.00
–G	Galvanized Cast Iron	POA
–H	Hinged Grate	252.00
–TSC	Trap Seal Cleanout with Plug	406.00
–VP	Vandal-Proof Secured Top	198.00

VP-DRIVER VANDAL-PROOF DRIVER

ENGINEERING SPECIFICATION

Zurn vandal proof screwdriver

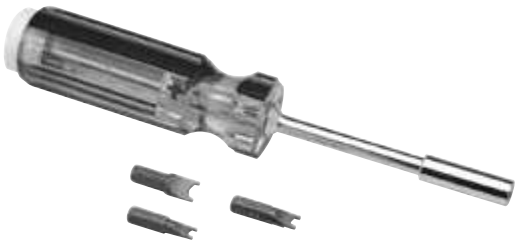

PREFIXES	DESCRIPTION	LIST PRICE
VP-Driver	Vandal-Proof Driver	120.00

TRAPS, PRIMERS, AND BACKWATER VALVES

TRAPS, PRIMERS, AND BACKWATER VALVES – APPLICATION INDEX	172
TRAPS, PRIMERS, AND BACKWATER VALVES – OPTIONS AND VARIATIONS	172
Z1072 ZSHIELD™ BARRIER TRAP SEAL DEVICE FOR FLOOR DRAINS	173
Z1000 DEEP SEAL TRAP	174
Z1019 FUNNEL DRAIN WITH "P" TRAP	174
Z1020XL ELECTRONIC TRAP PRIMER	175
Z1021 WATER SAVER TRAP PRIMER WITH 1-1/2" [38 MM] COPPER SWEAT WALL CONNECTION	175
Z1022-XL LEAD-FREE SANI-GARD AUTOMATIC TRAP PRIMER	176
Z1023 TRAP PRIMER CONNECTION ADAPTER	176
Z1024 FIXED AIR GAP	177
Z1025 FIXED AIR GAP	177
Z1030 HUB ADAPTER	178
Z1032 INSIDE CAULK REDUCER	178
Z1033 FEMALE PIPE THREAD REDUCER	179
Z1034 FEMALE PIPE ECCENTRIC REDUCER	179
⏲ **Z1035** FLOOR DRAIN INSTALLATION STABILIZER	180
⏲ **Z1035-Q** STRUCTURAL DECK DRAIN STABILIZER	180
⏲ **Z1036** FLOOR DRAIN INSTALLATION STABILIZER	181
Z1040 NO-HUB ADAPTER	181
Z1042 ELBOW ADAPTER	182
Z1088 BACKWATER VALVE GATE TYPE	182
Z1090 BACKWATER VALVE FLAPPER TYPE	183
Z1091 BACKWATER VALVE FLAPPER TYPE	183
Z1095 BACKWATER VALVE FLAPPER TYPE	184
Z1095-15 BACKWATER VALVE WITH FLOOR LEVEL CLEANOUT	184
Z1099 BACKWATER VALVE BALL FLOAT TYPE	185

TRAPS, PRIMERS, AND BACKWATER VALVES – APPLICATION INDEX

APPLICATION	RECOMMENDED DRAINAGE PRODUCT
Deep Seal Trap	Z1000, Z1019, Z1021
Trap Primer	Z1020, Z1021, Z1022
Trap Primer Connection Adapter	Z1023
Fixed Air Gap	Z1024, Z1025
Pipe Thread to Hub Adapter	Z1030
Inside Caulk Reducing Ring	Z1032
Iron Pipe Flush Bushing	Z1033
Eccentric Iron Pipe Threaded Bushing	Z1034
Floor Drain Stabilizer Plate	Z1035, Z1035-Q, Z1036
Pipe Thread to 90° No-Hub Adapter	Z1040
Pipe Thread to 90° No-Hub Elbow Adapter	Z1042
Gate Type Sanitary Sewer Backwater Valve	Z1088
Storm Sewer Backwater Valve	Z1088, Z1090, Z1091, Z1095
Bottom Outlet Floor Drain Backwater Valve	Z1099

TRAPS, PRIMERS, AND BACKWATER VALVES – OPTIONS AND VARIATIONS

All Zurn backwater valve and trap optional variations are specified as a prefix and/or suffix letter or number added to the series designation. Below are the available options.

PREFIXES	DESCRIPTION
Z	Standard Assembly or D.C.C.I. Body
ZAB	Bronze Body with Polished Bronze Top
ZABN	Bronze Body with Polished Nickel Bronze Top
ZARB	All Plain Bronze Body
ZB	D.C.C.I. Body with Polished Bronze Top
ZN	D.C.C.I. Body with Polished Nickel Bronze Top

SUFFIXES	DESCRIPTION
–AR	Acid Resisting Epoxy Coated Finish
–BP	Bronze Threaded Plug Cover
–BC	Bolted Cover
–BV	Bronze Flapper Valve
–C	Clamping Collar
–CP	Chrome-Plated Finish
–DS	Dome Strainer
–DU	Additional Distribution Units
–DU2	2-Outlet Distribution Unit

SUFFIXES	DESCRIPTION
–DU3	3-Outlet Distribution Unit
–DU4	4-Outlet Distribution Unit
–FC	Adjustable Floor Cleanout (See Z1400)
–FL	Flushing Connection
–F6	6″ Diameter Funnel
–G	Galvanized Cast Iron
–LC	Less Cleanout and Plug
–P	Trap Primer Connection (1/2″ or 3/4″)
–V	Backwater Valve
–WH	Wheel Handle
–WL	One-Piece Waste Elbow
–3	3/4″ Connection
–7	7″ Long Adapter
–12	12″ Extension
–24	24″ Extension

Z1072 ZSHIELD™ BARRIER TRAP SEAL DEVICE FOR FLOOR DRAINS

ENGINEERING SPECIFICATION

Zurn Z1072 ZShield Barrier trap seal device for use with floor drains to minimize trap evaporation. Product is comprised of an ABS rigid structure, silicone gasket and seal for 2″ [51 mm], 3″ [76 mm], 3-1/2″ [89 mm], and 4″ [102 mm] sizes. Device is engineered to comply with the performance requirements of ASSE 1072 standard and is third party listed with IAPMO (UPC), ICC (ICC cES PMG) and ASSE.

NOTE

-TSP Suffix Option listed on select drains

Product Designation	Dimensions in inches [mm]		ASSE 1072 Required Flow Rate G.P.M [L.P.M]
	A Pipe Size	B	
-2	2.20 [56]	1.22 [31]	12 [45.4]
-3	3.25 [83]	1.25 [32]	34 [128.7]
-3.5	3.53 [90]	1.30 [33]	52 [196.8]
-4	4.13 [105]	1.30 [33]	73 [276.4]

PREFIXES	DESCRIPTION	PRODUCT DESIG.	PIPE SIZE	LIST PRICE
Z1072	ABS Rigid Body with Silicone Gasket and Seal	-2	2″	96.00
		-3	3″	108.00
		-3.5	3-1/2″	135.00
		-4	4″	152.00

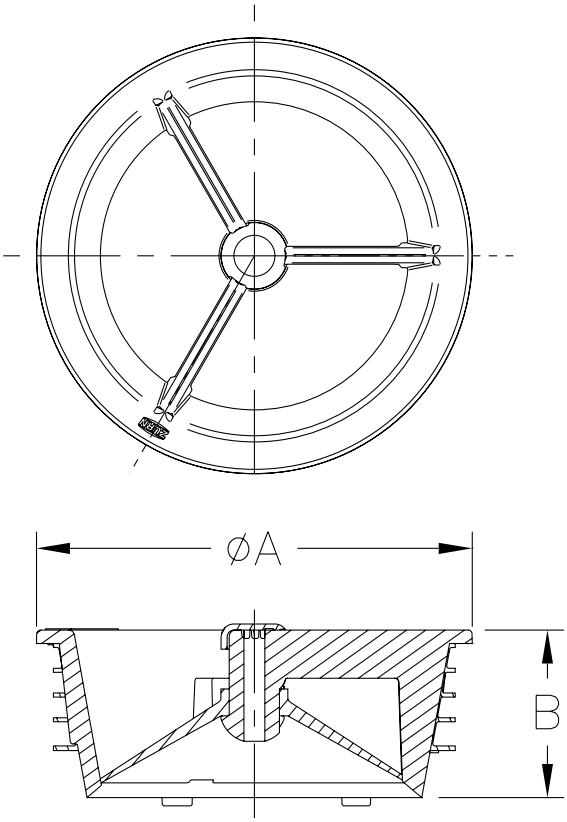

**Regularly furnished unless otherwise specified.*

This symbol denotes a product that is engineered to reduce installation and rework time.

For additional product information, please visit www.zurn.ca

Z1000 DEEP SEAL TRAP

ENGINEERING SPECIFICATION

Zurn Z1000 deep seal trap features Dura-Coated cast iron body with bottom bronze cleanout plug.

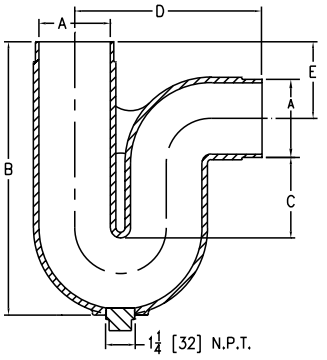

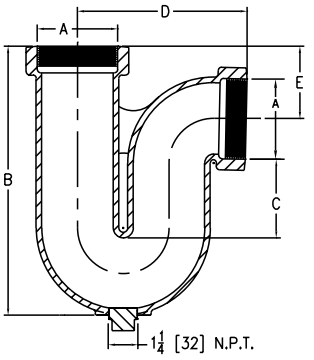

Dimensions in inches [mm]					Approximate Weight lb [kg]
A Pipe Size/ Outlet Type	B	C	D	E	
Threaded (IP)					
2IP	9-1/2 [241]	4 [102]	5-7/8 [149]	1-3/4 [44]	8 [4]
3IP	13 [330]	5 [127]	7-1/2 [191]	3 [76]	17 [8]
4IP	15 [381]		9-1/2 [241]	4 [102]	32 [15]
No-Hub (NH)					
2NH	10-1/2 [267]	4 [102]	6-1/2 [165]	2-3/4 [70]	8 [4]
3NH	13-1/2 [343]	5 [127]	8 [203]	3-1/2 [89]	17 [8]
4NH	15-1/4 [387]		9-1/2 [241]	4-1/4 [108]	32 [15]

PREFIXES	DESCRIPTION	A PIPE SIZE	LIST PRICE
Z1000*	D.C.C.I. Body	2″	**644.00**
		3″	**933.00**
		4″	**1,328.00**
CONNECTION DESIGNATION (SPECIFY PIPE SIZE IN INCHES AND TYPE OF CONNECTION)			
CONNECTION TYPE		**PIPE SIZE/OUTLET TYPE**	**ADD**
IP	Threaded	2IP, 3IP, 4IP	**97.00**
NH	No-Hub	2NH, 3NH, 4NH	**N/C**
SUFFIXES		**PIPE SIZE**	**ADD**
–FL	Flushing Connection		**125.00**
–G	Galvanized Cast Iron	2″	**178.00**
		3″	**178.00**
		4″	**247.00**
–P	Trap Primer Connection (Specify 1/2″ or 3/4″)		**38.00**

Z1019 FUNNEL DRAIN WITH "P" TRAP

ENGINEERING SPECIFICATION

Zurn Z1019 Dura-Coated cast iron combination funnel and trap drain comes complete with bronze bottom cleanout plug.

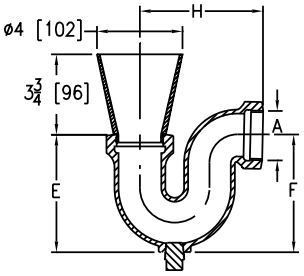

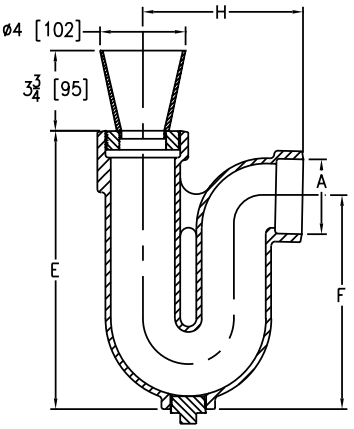

Dimensions in inches [mm]				Approximate Weight lb [kg]
A Pipe Size/ Outlet Type	E	F	H	
Threaded (IP)				
2IP	4-1/4 [108]	5-1/2 [140]	5-3/4 [146]	10 [5]
3IP	13 [330]	10 [254]	7-1/2 [191]	19 [9]

PREFIXES	DESCRIPTION	A PIPE SIZE	LIST PRICE
Z1019*	D.C.C.I. Body and Top	2″	**664.00**
		3″	**767.00**
ZAB1019	Bronze Body with Polished Bronze Top	2″	**1,135.00**
		3″	**1,877.00**
ZABN1019	Bronze Body with Polished Nickel Bronze Top	2″	**1,237.00**
		3″	**1,974.00**
CONNECTION DESIGNATION (SPECIFY PIPE SIZE IN INCHES AND TYPE OF CONNECTION)			
CONNECTION TYPE		**PIPE SIZE/OUTLET TYPE**	**ADD**
IP	Threaded	2IP, 3IP	**N/C**
SUFFIXES		**PIPE SIZE**	**ADD**
–AR	Acid Resisting Epoxy Coated Finish		**252.00**
–DS	Dome Strainer		**61.00**
–F6	6″ High x 6″ Diameter Funnel	Z	**103.00**
		ZAB, ZABN	**193.00**
–G	Galvanized Cast Iron Body		**289.00**

For additional product information, please visit www.zurn.ca

**Regularly furnished unless otherwise specified.*

This symbol denotes a product that is engineered to reduce installation and rework time.

Z1020XL ELECTRONIC TRAP PRIMER

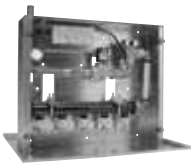

XL LEAD FREE

ENGINEERING SPECIFICATION

Zurn Z1020XL factory programmed, 5-port, lead-free electronic trap primer provides a six second water injection to traps every twenty-four hours.† Trap primer features a galvanized steel combination surface or recessed housing and cover, 1/2" [13 mm] solder copper inlet connection, brass ball-type stop valve, slow-closing 24 VAC solenoid valve with integral strainer, 120-24 VAC transformer, brass atmospheric vacuum breaker, PEX waterway, and anti-scaling multi-port manifold with five 1/2" [13 mm] male PEX outlet connections.
Min. Pressure: 3 psi
Working Pressure: 20 to 100 psig
Default Settings:
-Frequency: 24 hours
-Injection Time: 6 seconds
-Volume: 2 oz. min. per port

NOTE

†Regularly furnished unless otherwise specified. Alternative flow settings are available upon request.

Dimensions in inches [mm]		Approximate Weight lb [kg]
A Inlet Pipe Size	B Outlet Pipe Size	
1/2 [13] Solder	1/2 [13] PEX Connection	12 [5]

PREFIXES	DESCRIPTION	LIST PRICE
Z1020XL*	PEX Waterway	6,684.00
SUFFIXES		**ADD**
–CW	Copper Waterway (with 1/2" Female IPS Connection)	1,439.00
–DU4	Additional Distribution Units with Copper Waterway (Specify quantity. Contact Zurn for sizing specifications)	483.00
–VP	Vandal-Proof Secured Cover with Vandal-Proof Driver	59.00
–10	Ten Outlets	953.00

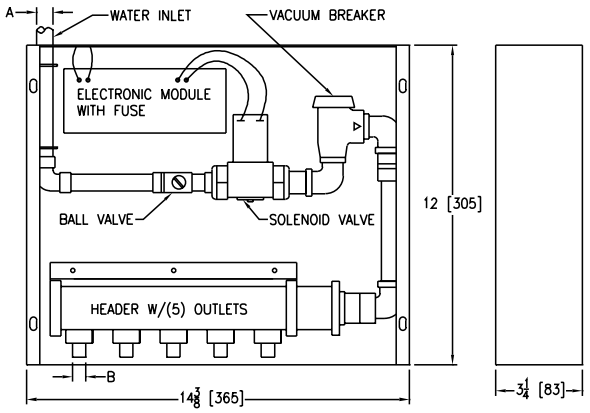

Z1021 WATER SAVER TRAP PRIMER WITH 1-1/2" [38 MM] COPPER SWEAT WALL CONNECTION

ENGINEERING SPECIFICATION

Zurn 1021 water saver trap primer features chrome-plated, polished cast brass body with cleanout, ground joint elbow with 1-1/2" [38 mm] NPT outlet, 1-1/2" [38 mm] slip nuts and washers, and reducing washer for 1-1/4" [32 mm] sink tail piece hookup, escutcheons, and stainless steel braided primer hose with 1/2" [13 mm] FIP compression fittings.

Dimensions in inches [mm]	Approximate Weight lb [kg]
A Pipe Size	
1-1/2 [38]	2 [1]

PREFIXES	DESCRIPTION	LIST PRICE
Z1021*	Polished Chrome Plated	395.00
SUFFIXES		**ADD**
–WL	One-piece Waste Elbow (For Slip Joint Wall Connection)	105.00

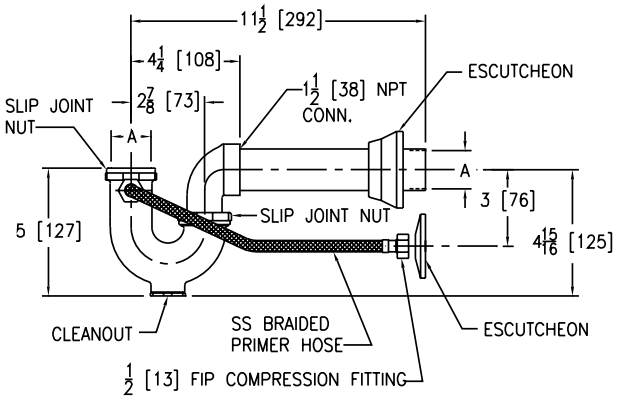

*Regularly furnished unless otherwise specified.

This symbol denotes a product that is engineered to reduce installation and rework time.

For additional product information, please visit www.zurn.ca

Z1022-XL LEAD-FREE SANI-GARD AUTOMATIC TRAP PRIMER

Patented

XL LEAD FREE

1018

ENGINEERING SPECIFICATION

Zurn Z1022-XL lead-free sani-gard automatic trap primer features an all bronze body with integral vacuum breaker, non-liming internal operating piston, stainless steel spring, removable bronze seat with metering orifice, and sealed bronze cover.

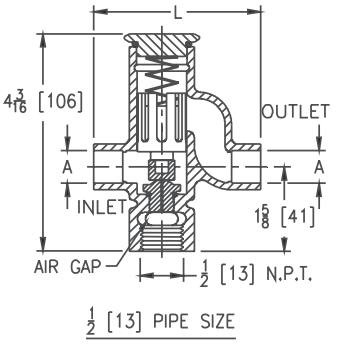

Dimensions in inches [mm]		Approximate Weight lb [kg]
A Pipe Size/Connection	L	
1/2 [13] Solder Female	3-7/32 [82]	1 [0.5]
1/2 [13] IP Female		
1/2 [13] Solder Female Union	5-21/32 [144]	1.5 [0.7]
1/2 [13] IP Female Union	5-11/32 [136]	

PREFIXES	DESCRIPTION	LIST PRICE
Z1022-XL*	All Plain Bronze Body	Combine with connection type for pricing

CONNECTION DESIGNATION (SPECIFY PIPE SIZE IN INCHES AND TYPE OF CONNECTION)			
CONNECTION TYPE		PIPE SIZE/OUTLET TYPE	ADD
SF	1/2" Solder Female	1/2 SF	207.00
IP	1/2" IP Female	1/2 IP	207.00
SFU	1/2" Solder Female Union	1/2 SFU	318.00
IPU	1/2" IP Female Union	1/2 IPU	318.00
SUFFIXES			ADD
–CP	Chrome-Plated Finish		82.00
–DU2	2-Outlet Distribution Unit		305.00
–DU3	3-Outlet Distribution Unit		347.00
–DU4	4-Outlet Distribution Unit		483.00
–RK	Repair Kit		141.00

Z1023 TRAP PRIMER CONNECTION ADAPTER

ENGINEERING SPECIFICATION

Zurn Z1023 trap primer connection adapter features Dura-Coated cast iron body with 1/2" [13 mm] female threaded side inlet trap primer connection.

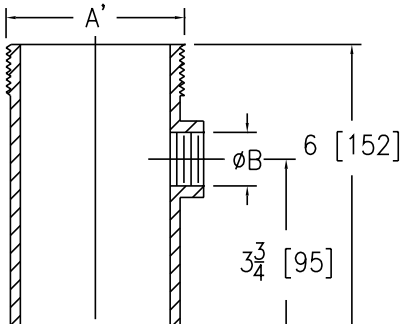

Dimensions in inches [mm]		Approximate Weight lb [kg]
A x A'	B	
No-Hub x No-Hub		
2NH x 2NH	1/2 [13]	2 [1]
3NH x 3NH		4 [2]
4NH x 4NH		6 [3]
Threaded x No-Hub		
2IP x 2NH	1/2 [13]	2 [1]
3IP x 3NH		4 [2]
4IP x 4NH		6 [3]

PREFIXES	DESCRIPTION	PIPE SIZE	LIST PRICE
Z1023*	D.C.C.I. Body	2", 3", 4"	Combine with connection type for pricing

CONNECTION DESIGNATION (SPECIFY PIPE SIZE IN INCHES AND TYPE OF CONNECTION)			
CONNECTION TYPE		PIPE SIZE/OUTLET TYPE	ADD
NH x NH	No-Hub x No-Hub	2NH x 2NH, 3NH x 3NH, 4NH x 4NH	118.00
IP x NH	Threaded x No-Hub	2IP x 2NH, 3IP x 3NH, 4IP x 4NH	118.00
SUFFIXES			ADD
–G	Galvanized Cast Iron Body		158.00

For additional product information, please visit www.zurn.ca

**Regularly furnished unless otherwise specified.*

This symbol denotes a product that is engineered to reduce installation and rework time.

Z1024 FIXED AIR GAP

ENGINEERING SPECIFICATION

Zurn Z1024 fixed air gap features Dura-Coated cast iron body with slip joint inlet and NPT outlet.

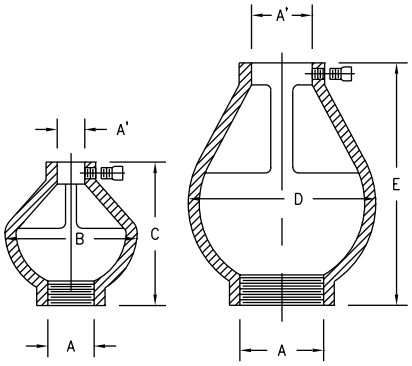

Product Designation	Dimensions in inches [mm]					Approximate Weight lb [kg]
	A' x A SJ x N.P.T.	B	C	D	E	
-1	1/4 [6] x 3/4 [19]	3 [76]	3-1/4 [83]	-	-	1 [0.5]
-2	1/2 [13] x 3/4 [19]	-	-	4-1/4 [108]	5-1/2 [140]	3 [1]
-3	1/2 [13] x 1 [25]	-	-			
-4	3/4 [19] x 1-1/2 [38]	-	-			
-5	1 [25] x 1-1/2 [38]	-	-			

PREFIXES	DESCRIPTION	PRODUCT DESIG.	PIPE SIZE/OUTLET TYPE	LIST PRICE
Z1024*	D.C.C.I. Body	-1	1/4SJ x 3/4N.P.T.	**289.00**
		-2	1/2SJ x 3/4N.P.T.	**289.00**
		-3	1/2SJ x 1N.P.T.	**313.00**
		-4	3/4SJ x 1-1/2N.P.T.	**401.00**
		-5	1SJ x 1-1/2N.P.T.	**401.00**
SUFFIXES				**ADD**
–G	Galvanized Cast Iron			**158.00**

Z1025 FIXED AIR GAP

ENGINEERING SPECIFICATION

Zurn Z1025 fixed air gap features Dura-Coated cast iron body with slip joint inlet and no-hub outlet.

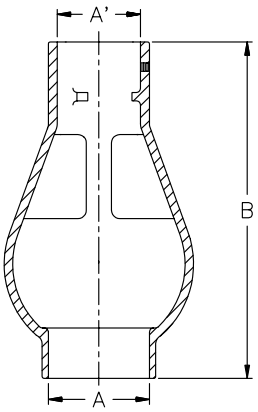

Product Designation	Dimensions in inches [mm]		Approximate Weight lb [kg]
	A' x A SJ x NH	B	
-2	1-1/2 [38] x 2 [51]	10 [254]	4 [2]
-3	2 [51] x 3 [76]		8 [4]
-4	3 [76] x 4 [102]		20 [9]
-6	4 [102] x 6 [152]		32 [15]

PREFIXES	DESCRIPTION	PRODUCT DESIG.	PIPE SIZE/OUTLET TYPE	LIST PRICE
Z1025*	D.C.C.I. Body	-2	1-1/2SJ x 2NH	**275.00**
		-3	2SJ x 3NH	**329.00**
		-4	3SJ x 4NH	**483.00**
		-6	4SJ x 6NH	**1,127.00**
ZARB1025	All Plain Bronze Body	-2	1-1/2SJ x 2NH	**678.00**
		-3	2SJ x 3NH	**819.00**
		-4	3SJ x 4NH	**1,202.00**
		-6	4SJ x 6NH	**2,814.00**
SUFFIXES				**ADD**
–G	Galvanized Cast Iron			**158.00**

**Regularly furnished unless otherwise specified.*

This symbol denotes a product that is engineered to reduce installation and rework time.

For additional product information, please visit www.zurn.ca

Z1030 HUB ADAPTER

ENGINEERING SPECIFICATION

Zurn Z1030 hub adapter features Dura-Coated cast iron with male NPT threaded and hub connections.

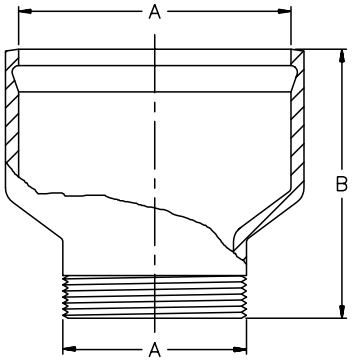

Product Designation	Dimensions in inches [mm] Pipe Size A	B	Approximate Weight lb [kg]
-2	2 [51]	4-1/4 [108]	3 [1]
-3	3 [76]	4-3/8 [111]	5 [2]
-4	4 [102]	4-3/4 [121]	6 [3]
-6	6 [152]	5 [127]	9 [4]

PREFIXES	DESCRIPTION	PRODUCT DESIG.	PIPE SIZE/OUTLET TYPE	LIST PRICE
Z1030*	D.C.C.I. Body with Threaded x Hub Connection Type	-2	2IP x 2HB	**145.00**
		-3	3IP x 3HB	**266.00**
		-4	4IP x 4HB	**363.00**
		-6	6IP x 6HB	**691.00**
SUFFIXES			**PIPE SIZE**	**ADD**
–G	Galvanized Cast Iron		2″, 3″, 4″	**91.00**
			6″	**126.00**

Z1032 INSIDE CAULK REDUCER

ENGINEERING SPECIFICATION

Zurn Z1032 inside caulk features Dura-Coated cast iron reducing ring.

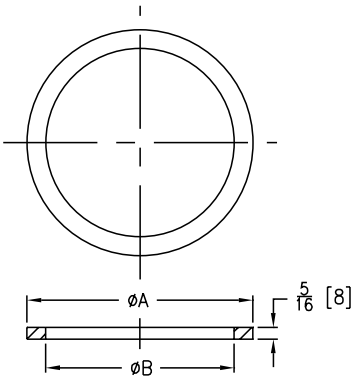

Product Designation	Dimensions in inches [mm] Pipe Size A	B	Approximate Weight lb [kg]
-3 x 2	3 [76]	2 [51]	1 [0.5]
-4 x 2	4 [102]		
-4 x 3		3 [76]	
-6 x 4	6 [152]	4 [102]	1.5 [0.7]
-6 x 5		5 [127]	

PREFIXES	DESCRIPTION	PRODUCT DESIG.	LIST PRICE
Z1032*	Dura-Coated Cast Iron Reducing Ring	-3 x 2	**70.00**
		-4 x 2	**84.00**
		-4 x 3	**116.00**
		-6 x 4	**182.00**
		-6 x 5	**207.00**

Z1033 FEMALE PIPE THREAD REDUCER

ENGINEERING SPECIFICATION

Zurn Z1033 female pipe thread reducer features cast iron construction and is available in ranging sizes.

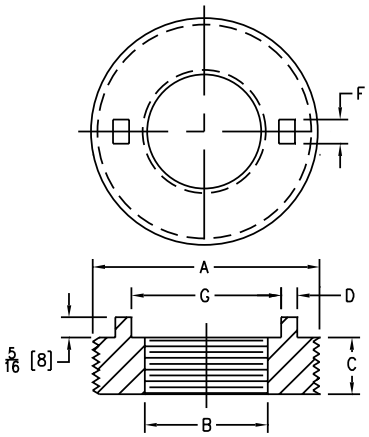

PREFIXES	DESCRIPTION	PRODUCT DESIG.	LIST PRICE
Z1033*	Male Thread x Female Thread Cast Iron Reducer	-1 x .75	127.00
		-1.5 x 1.25	127.00
		-2 x 1.25	127.00
		-2 x 1.5	127.00
		-3 x 1.5	152.00
		-3 x 2	152.00
		-4 x 2	160.00
		-4 x 3	160.00
		-6 x 4	208.00
		-6 x 5	208.00

Product Designation	Dimensions in inches [mm]						Approximate Weight lb [kg]
	A	B	C	D	F	G	
-1 x .75	1 [25]	3/4 [19]	7/16 [11]	-	-	-	.5 [.25]
-1.5 x 1.25	1-1/2 [38]	1-1/4 [32]	1/2 [13]	-	-	-	
-2 x 1.25	2 [51]		9/16 [14]	1/8 [3]	3/8 [9]	1-29/32 [48]	
-2 x 1.5		1-1/2 [38]					1 [0.5]
-3 x 1.5	3 [76]		7/8 [22]	1/4 [6]		2-5/16 [59]	
-3 x 2		2 [51]			1/2 [13]	2-35/64 [65]	1.5 [1]
-4 x 2	4 [102]		1-1/8 [29]			3-1/16 [78]	3 [1]
-4 x 3		3 [76]				3-37/64 [91]	2 [1]
-6 x 4	6 [152]	4 [102]		5/16 [8]		5-1/8 [130]	6 [3]
-6 x 5		5 [127]				5-21/32 [144]	3.75 [2]

Z1034 FEMALE PIPE ECCENTRIC REDUCER

ENGINEERING SPECIFICATION

Zurn Z1034 female pipe thread eccentric reducer features cast iron construction and is available in a range of sizes.

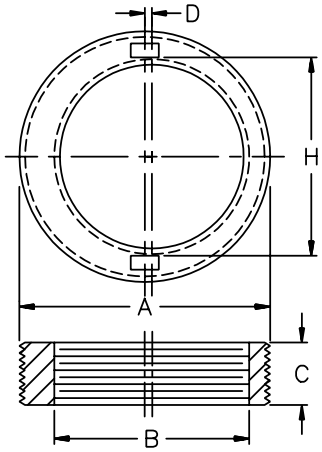

Product Designation	Dimensions in inches [mm]					Approximate Weight lb [kg]
	A	B	C	D	H	
-3 x 2	3 [76]	2 [51]	7/8 [22]	3/16 [5]	2-5/8 [67]	1 [0.5]
-4 x 2	4 [102]			11/16 [17]	3 [76]	3 [1]
-4 x 3		3 [76]	1-1/8 [29]	1/8 [3]	3-9/16 [90]	1.5 [0.7]

PREFIXES	DESCRIPTION	PRODUCT DESIG.	LIST PRICE
Z1034*	Female Pipe Thread Cast Iron Reducer	-3 x 2	127.00
		-4 x 2	208.00
		-4 x 3	208.00

*Regularly furnished unless otherwise specified.

This symbol denotes a product that is engineered to reduce installation and rework time.

For additional product information, please visit www.zurn.ca

Z1035 FLOOR DRAIN INSTALLATION STABILIZER

Patented

ENGINEERING SPECIFICATION

Zurn Z1035 floor drain installation stabilizer features #20 gage, galvanized steel plate with variable pipe opening, four support stud holes, and four nail holes. Complete with hardware bag containing four 3/8" [10 mm] -16 x 12" [305 mm] long studs and eight 3/8" [10 mm] -16 flanged locknuts.

NOTE

1. 7-5/8" [194 mm] diameter stud holes are used to accommodate 8-3/8" [213 mm] diameter drain body. (To be used with no-hub and Neo-Loc outlet connections only.)
2. For typical installation, see Form No. FD72.

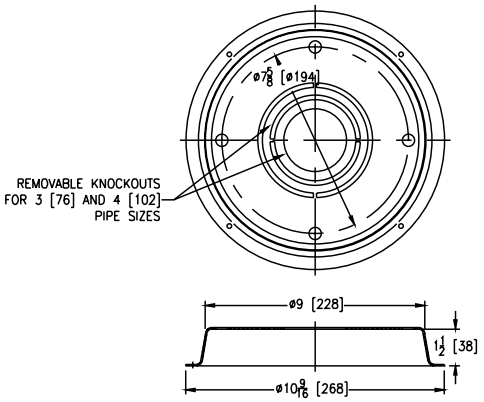

Dimensions in inches [mm]	
Pipe Size	Pipe Opening Diameter
2 [51]	2-9/16 [65]
3 [76]	3-11/16 [94]
4 [102]	4-11/16 [119]

PREFIXES	DESCRIPTION	PIPE SIZE	LIST PRICE
Z1035*	Galvanized Steel Plate	2", 3", 4"	**141.00**

ZN415 Floor Drain with Z1035 Stabilizer

Z1035-Q STRUCTURAL DECK DRAIN STABILIZER

Patented

ENGINEERING SPECIFICATION

Zurn Z1035-Q structural deck drain stabilizer for Q-deck features #16 gage galvanized steel plate with four support stud slots, and six (6) nail holes. Complete with hardware bag containing four 3/8" [10 mm] -16 x 12" [305 mm] long studs and eight 3/8" [10 mm] -16 flanged locknuts.

NOTE

Designed for use with 8-3/8" [213 mm] diameter drain body.

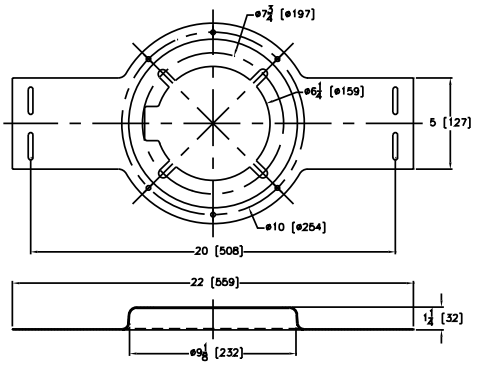

PREFIXES	DESCRIPTION	LIST PRICE
Z1035-Q*	Galvanized Steel Plate	**194.00**

ZN158 Floor Drain with Z1035-Q Stabilizer

For additional product information, please visit www.zurn.ca

**Regularly furnished unless otherwise specified.*

This symbol denotes a product that is engineered to reduce installation and rework time.

Z1036 FLOOR DRAIN INSTALLATION STABILIZER

Patented

ENGINEERING SPECIFICATION

Zurn Z1036 floor drain installation stabilizer features #16 gage, galvanized steel plate with variable pipe opening, eight support stud holes, and four nail holes. Complete with hardware bag containing four 3/8" [10 mm] -16 x 12" [305 mm] long studs and eight 3/8" [10 mm] -16 flanged locknuts.

NOTE

1. 'B' diameter stud holes are used to accommodate 12" [305 mm] diameter drain body. 'C' diameter stud holes are used to accommodate 15" [381 mm] diameter drain body. (To be used with no-hub and Neo-Loc outlet connections only.)
2. For typical installation, see Form No. FD72.

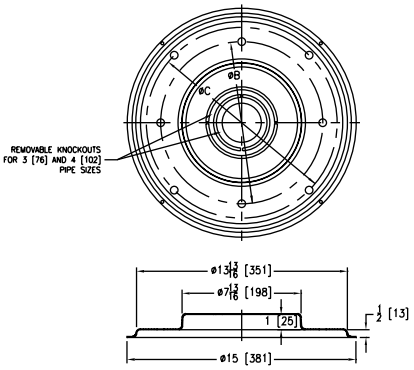

Dimensions in inches [mm]			
Pipe Size	Pipe Opening Diameter	B	C
2 [51]	2-9/16 [65]	10-5/8 [270]	12-1/2 [318]
3 [76]	3-11/16 [94]		
4 [102]	4-11/16 [119]		

PREFIXES	DESCRIPTION	PIPE SIZE	LIST PRICE
Z1036*	Galvanized Steel Plate	2", 3", 4"	**147.00**

ZN150 Floor Drain with Z1036 Stabilizer

Z1040 NO-HUB ADAPTER

ENGINEERING SPECIFICATION

Zurn Z1040 no-hub adapter features Dura-Coated cast iron with male NPT threaded and no-hub connections.

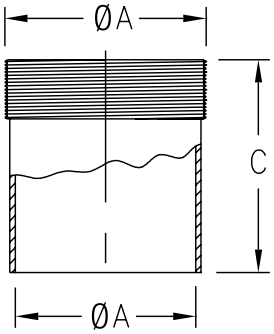

Product Designation	Dimensions in inches [mm]		Approximate Weight lb [kg]
	A Pipe Size	C	
-2	2 [51]	3-1/2 [89]	1 [0.5]
-3	3 [76]		2 [1]
-4	4 [102]		3 [1]
-5	5 [127]		4 [2]
-6	6 [152]		5 [2]
-8	8 [203]		8 [4]
-10	10 [254]		11 [5]
-12	12 [305]		23 [10]

PREFIXES	DESCRIPTION	PRODUCT DESIG.	PIPE SIZE/OUTLET TYPE	LIST PRICE
Z1040*	D.C.C.I. Body with Male Thread x No-Hub Connection Type	-2	2IP x 2NH	**108.00**
		-3	3IP x 3NH	**137.00**
		-4	4IP x 4NH	**187.00**
		-5	5IP x 5NH	**282.00**
		-6	6IP x 6NH	**292.00**
		-8	8IP x 8NH	**646.00**
		-10	10IP x 10NH	**800.00**
		-12	12IP x 12NH	**930.00**

SUFFIXES		ADD
–G	Galvanized Cast Iron	**158.00**

*Regularly furnished unless otherwise specified.

This symbol denotes a product that is engineered to reduce installation and rework time.

For additional product information, please visit www.zurn.ca

Z1042 ELBOW ADAPTER

ENGINEERING SPECIFICATION

Zurn Z1042 elbow adapter features Dura-Coated cast iron with male NPT threaded and no-hub connections.

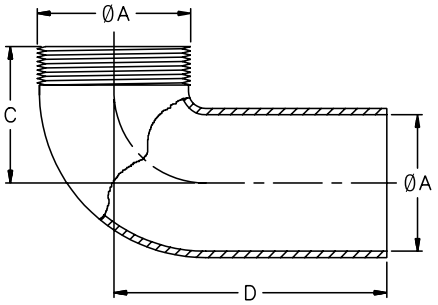

Product Designation	Dimensions in inches [mm]			Approximate Weight lb [kg]
	A Pipe Size	C	D	
-3	3 [76]	3-3/4 [95]	7 [178]	8 [4]
-4	4 [102]	4 [102]	8 [203]	14 [6]
-6	6 [152]	5-1/2 [140]	9 [229]	25 [11]

PREFIXES	DESCRIPTION	PRODUCT DESIG.	PIPE SIZE/OUTLET TYPE	LIST PRICE
Z1042*	D.C.C.I. Body with Male Thread and No-Hub Connection Type	-3	3IP x 3NH	326.00
		-4	4IP x 4NH	363.00
		-6	6IP x 6NH	432.00
SUFFIXES			**PIPE SIZE**	**ADD**
–G	Galvanized Cast Iron		3″	178.00
			4″	178.00
			6″	247.00

Z1088 BACKWATER VALVE GATE TYPE

ENGINEERING SPECIFICATION

Zurn Z1088 backwater valve features Dura-Coated cast iron body, automatic PVC (4″ [102 mm] size only) flapper type backwater valve with O-ring adjacent to inlet, and spade type bronze gate valve with O-ring seat insert adjacent to outlet, easily controlled at floor level by covered handle engaging bronze non-rising stem.

NOTE

Not designed nor intended to be used as a shut-off valve.

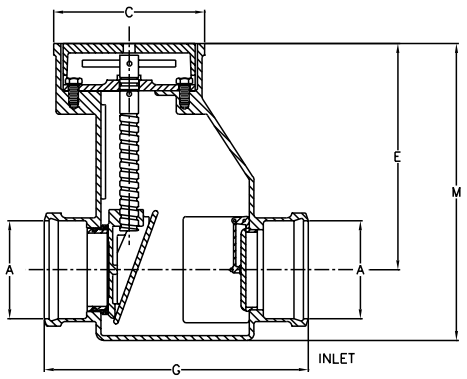

Product Designation	Dimensions in inches [mm]				Approximate Weight lb [kg]
	A Pipe Size	C	E	M	
-4	4 [102]	8 [203]	12 [305]	15-3/4 [400]	80 [36]
-6	6 [152]	10-1/2 [267]	14-1/2 [368]	19 [483]	120 [54]

PREFIXES	DESCRIPTION	PIPE SIZE	LIST PRICE
Z1088*	D.C.C.I. Body and Cover with PVC Flapper Valve, Bronze Check Valve, Gate, and Stem	4″, 6″	Combine with connection type for pricing
CONNECTION DESIGNATION (SPECIFY PIPE SIZE IN INCHES AND TYPE OF CONNECTION)			
PRODUCT DESIG.	**CONNECTION TYPE**	**PIPE SIZE/ OUTLET TYPE**	**ADD**
-4	Hub x Hub	4HB x 4HB	4,073.00
	Hub x No-Hub	4HB x 4NH	4,073.00
	No-Hub x No-Hub	4NH x 4NH	4,073.00
-6	Hub x Hub	6HB x 6HB	7,335.00
	Hub x No-Hub	6HB x 6NH	7,335.00
	No-Hub x No-Hub	6NH x 6NH	7,335.00
SUFFIXES		**PIPE SIZE**	**ADD**
–BV	Bronze Flapper Valve (4″ Size)		N/C
–G	Galvanized Cast Iron Body		1,182.00
–WH	Wheel Handle		607.00
–12	12″ Extension	4″	1,248.00
		6″	1,437.00
–24	24″ Extension	4″	1,744.00
		6″	1,911.00

For additional product information, please visit www.zurn.ca

**Regularly furnished unless otherwise specified.*

This symbol denotes a product that is engineered to reduce installation and rework time.

Z1090 BACKWATER VALVE FLAPPER TYPE

ENGINEERING SPECIFICATION

Zurn Z1090 backwater valve features Dura-Coated cast iron body, no-hub inlet and outlet, gasketed bolted cover, and automatic PVC (3″ [76 mm] and 4″ [102 mm] sizes only) flapper type backwater valve with O-ring.

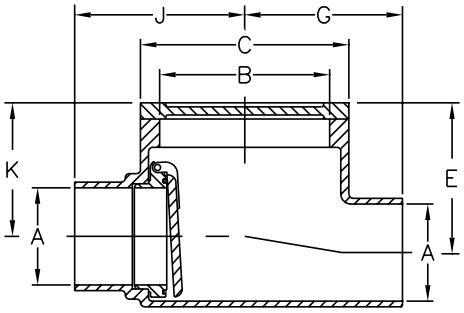

PREFIXES	DESCRIPTION	PRODUCT DESIG.	PIPE SIZE/OUTLET TYPE	LIST PRICE
Z1090*	D.C.C.I. Body with No-Hub Connection Type	-2	2NH	774.00
		-3	3NH	1,117.00
		-4	4NH	1,305.00
		-6	6NH	1,505.00
SUFFIXES				**ADD**
–BP	Bronze Threaded Plug Cover			N/C
–BV	Bronze Flapper Valve (3″ and 4″ Size)			N/C
–G	Galvanized Cast Iron Body			450.00

Product Designation	Dimensions in inches [mm]							Approximate Weight lb [kg]
	A Pipe Size	B	C	E	G	J	K	
-2	2 [51]	5-1/4 [133]	6-1/2 [165]	4-5/8 [117]	4-7/8 [124]	5-1/4 [133]	3-5/8 [92]	16 [7]
-3	3 [76]			4-1/8 [105]				17 [8]
-4	4 [102]	6-3/8 [162]	7-1/2 [191]	4-3/4 [121]	6 [152]	6 [152]	4-1/4 [108]	22 [10]
-6	6 [152]	8-1/4 [210]	9-1/2 [241]	7-1/2 [191]	6-5/8	7-7/16	6 [152]	34 [15]

Z1091 BACKWATER VALVE FLAPPER TYPE

ENGINEERING SPECIFICATION

Zurn Z1091 backwater valve features Dura-Coated cast iron body, hub inlet and open outlet for installation at end of drainage line, and automatic PVC (3″ [76 mm] and 4″ [102 mm] sizes only) flapper type backwater valve with O-ring.

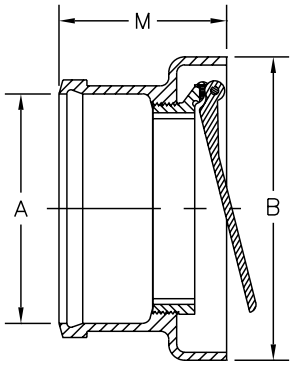

Product Designation	Dimensions in inches [mm]			Approximate Weight lb [kg]
	A Pipe Size	B	M	
-3	3 [76]	7 [178]	5 [127]	12 [5]
-4	4 [102]	7-1/2 [191]		15 [7]
-6	6 [152]	9-1/2 [241]	5-1/4 [133]	28 [13]
-8	8 [203]	11-1/2 [292]	6 [152]	42 [19]
-10	10 [254]	14 [356]	7 [178]	58 [26]

PREFIXES	DESCRIPTION	PRODUCT DESIG.	PIPE SIZE/OUTLET TYPE	LIST PRICE
Z1091*	D.C.C.I. Body with Hub Connection Type	-3	3HB	774.00
		-4	4HB	801.00
		-6	6HB	998.00
		-8	8HB	2,634.00
		-10	10HB	5,375.00
SUFFIXES			**PIPE SIZE**	**ADD**
–BV	Bronze Flapper Valve (3″ and 4″ Size)			N/C
–G	Galvanized Cast Iron		3″, 4″	247.00
			6″	292.00
			8″, 10″	422.00

**Regularly furnished unless otherwise specified.*

This symbol denotes a product that is engineered to reduce installation and rework time.

For additional product information, please visit www.zurn.ca

Z1095 BACKWATER VALVE FLAPPER TYPE

ENGINEERING SPECIFICATION

Zurn Z1095 backwater valve features Dura-Coated cast iron body, hub inlet and offset spigot outlet, bronze threaded cover, and automatic PVC (3" [76 mm] and 4" [102 mm] sizes only) flapper type backwater valve with O-ring.

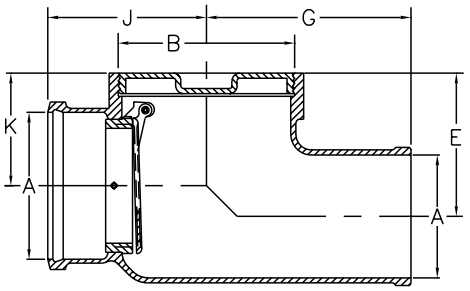

PREFIXES	DESCRIPTION	PRODUCT DESIG.	PIPE SIZE/OUTLET TYPE	LIST PRICE
Z1095*	D.C.C.I. Body with Hub x Spigot Connection Type	-2	2HB x 2SP	1,358.00
		-3	3HB x 3SP	2,101.00
		-4	4HB x 4SP	2,583.00
		-8	8HB x 8SP	4,308.00
		-10	10HB x 10SP	4,844.00

SUFFIXES		PIPE SIZE	ADD
–BC	Bolted Cover		N/C
–BV	Bronze Flapper Valve (3" and 4" Size)		N/C
–G	Galvanized Cast Iron	2" thru 4"	450.00
		8", 10"	1,158.00

Product Designation	Dimensions in inches [mm]						Approximate Weight lb [kg]
	A Pipe Size	B	E	G	J	K	
-2	2 [51]	4 [102]	4-3/8 [111]	7 [178]	5 [127]	2-7/8 [73]	23 [10]
-3	3 [76]	5 [127]	5-1/8 [130]	8 [203]	6 [152]	3-5/8 [92]	30 [14]
-4	4 [102]	6 [152]	5-5/8 [143]	8-1/2 [216]	6-3/4 [171]	4-1/8 [105]	34 [15]
-8	8 [203]	10 [254]	7-1/2 [191]	11-7/8 [302]	9-3/8 [238]	6 [152]	79 [36]
-10	10 [254]	12 [305]		12-3/4 [324]	10-7/8 [276]	7 [178]	102 [46]

Z1095-15 BACKWATER VALVE WITH FLOOR LEVEL CLEANOUT

ENGINEERING SPECIFICATION

Zurn Z1095-15 Backwater Valve features Dura-Coated cast iron body, No-Hub inlet/outlet floor level cleanout ferrule with secured gasketed cover, adjustable housing frame and cover, and bronze backwater valve assembly.

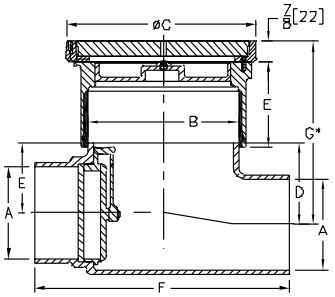

PREFIXES	DESCRIPTION	PRODUCT DESIG.	LIST PRICE
Z1095-15*	D.C.C.I Body	-3	2,555.00
		-4	2,723.00
		-6	3,701.00
ZN1095-15	D.C.C.I. Body with Nickel Bronze Frame and Cover	-3	2,723.00
		-4	2,838.00
		-6	3,850.00

SUFFIXES		PIPE SIZE	ADD
–BV	Bronze Flapper Valve	3" [76 mm], 4" [102 mm]	N/C
		6" [152 mm]	292.00
–G	Galvanized Cast Iron	2" [51 mm] thru 4" [102 mm]	828.00
–X	Polished Nickel Bronze Frame and Cover Recessed for Tile		677.00

Product Designation	Dimensions in inches [mm]							Approximate Weight lb [kg]
	A Pipe Size	B	C	D	E	F	G	
-3	3 [76]	3 [76]	5-1/8 [130]	6-1/8 [156]	3-5/8 [92]	15 [381]	15-1/8 [384]	25 [11]
-4	4 [102]	4 [102]	6-1/8 [156]	6-1/2 [165]	3-5/8 [92]	16-1/4 [413]	15-1/2 [394]	33 [15]
-6	6 [152]	6 [152]	8-1/4 [210]	7-3/8 [187]	3-3/4 [95]	17 [432]	16-3/8 [416]	74 [34]

For additional product information, please visit www.zurn.ca

**Regularly furnished unless otherwise specified.*

This symbol denotes a product that is engineered to reduce installation and rework time.

Z1099 BACKWATER VALVE BALL FLOAT TYPE

ENGINEERING SPECIFICATION

Zurn Z1099 backwater valve features Dura-Coated cast iron body, plastic ball float, bronze backwater bushing, and replaceable neoprene seat.

Product Designation	Dimensions in inches [mm]			Approximate Weight lb [kg]
	A Pipe Size	B	C	
-3	3 [76]	3 [76]	6-1/2 [165]	7 [3]
-4	4 [102]	4 [102]		9 [4]
-6	6 [152]	6 [152]		25 [11]

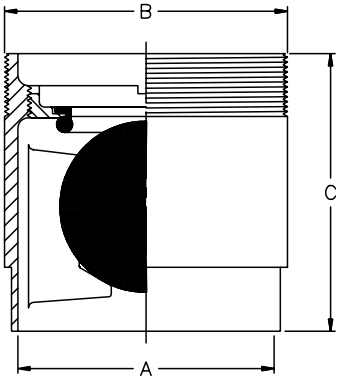

PREFIXES	DESCRIPTION	PIPE SIZE	LIST PRICE
Z1099*	D.C.C.I. Body	3″ 4″, 6″	Combine with connection type for pricing

CONNECTION DESIGNATION (SPECIFY PIPE SIZE IN INCHES AND TYPE OF CONNECTION)			
PRODUCT DESIG.	CONNECTION TYPE	PIPE SIZE/OUTLET TYPE	ADD
-3	Threaded x No-Hub	3IP x 3NH	547.00
	No-Hub x No-Hub	3NH x 3NH	547.00
-4	Threaded x No-Hub	4IP x 4NH	547.00
	No-Hub x No-Hub	4NH x 4NH	547.00
-6	Threaded x No-Hub	6IP x 6NH	1,333.00
	No-Hub x No-Hub	6NH x 6NH	1,333.00
SUFFIXES			ADD
–G	Galvanized Cast Iron	3″, 4″	164.00
		6″	368.00

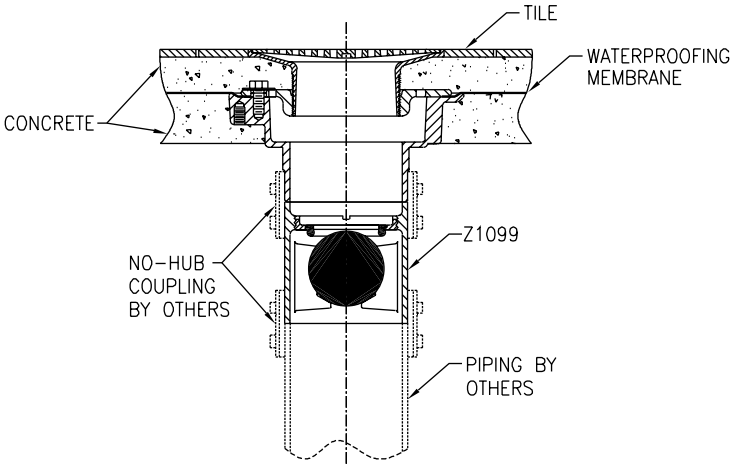

Z1099 shown installed on the outlet of a floor drain. In order for the Z1099 to operate properly, it must always be installed in a vertical position as illustrated.

*Regularly furnished unless otherwise specified.

This symbol denotes a product that is engineered to reduce installation and rework time.

For additional product information, please visit www.zurn.ca

NOTES

INTERCEPTORS

INTERCEPTORS – GENERAL INFORMATION	188
INTERCEPTORS – APPLICATION INDEX	188
GREASE INTERCEPTORS – PURPOSE	188
GREASE INTERCEPTORS – OPERATION	189
Z250H FOG-CEPTOR® INTERCEPTOR	190
Z1165 100 PPM GREASE INTERCEPTOR SYSTEM WITH SOLIDS INTERCEPTOR	191
Z1170 GREASE INTERCEPTOR	192
Z1170-UN GREASE INTERCEPTOR WITH USER NOTIFICATION SYSTEM	194
ZS1170 GREASE INTERCEPTOR STAINLESS STEEL	195
Z1171 LOW PROFILE GREASE INTERCEPTOR	196
Z1171-TD LOW PROFILE GREASE INTERCEPTOR WITH ACCUMULATING CONE AND FLOW CONTROL TEE	197
Z1172 LARGE CAPACITY GREASE INTERCEPTOR	198
Z1172-UN LARGE CAPACITY GREASE INTERCEPTOR WITH USER NOTIFICATION SYSTEM	200
Z1173 EJECTO-MATIC GREASE INTERCEPTOR	201
Z1173-TD EJECTO-MATIC GREASE INTERCEPTOR WITH GREASE ACCUMULATING CONE AND IN-LINE SHUTOFF VALVE	202
Z1174 GREASE EATING BACTERIA DOSING UNIT AND SOLIDS INTERCEPTOR COMBINATION	203
SOLIDS INTERCEPTORS – GENERAL PRODUCT INFORMATION	204
SOLIDS INTERCEPTORS – APPLICATION INDEX	204
SOLIDS INTERCEPTORS – SIZING	204
Z1175 HAIR INTERCEPTOR	205
Z1176 HAIR INTERCEPTOR	205
Z1180 SOLIDS INTERCEPTOR	206
Z1181 SOLIDS INTERCEPTOR	206
Z1182 SIDE ACCESS SOLIDS INTERCEPTOR	207
Z1183 SOLIDS INTERCEPTOR	207
Z1183-DF SOLIDS INTERCEPTOR WITH DISPOSABLE FILTER BAGS	208
Z1183-FC SOLIDS INTERCEPTOR WITH FLUSH COVER	209
Z1184 BOTTOM ACCESS SOLIDS INTERCEPTOR	210
Z1185 LINT INTERCEPTOR	211
OIL INTERCEPTORS – GENERAL PRODUCT INFORMATION	212
OIL INTERCEPTORS – APPLICATION INDEX	212
Z1186 OIL INTERCEPTOR	213
Z1186-ST OIL INTERCEPTOR WITH INTEGRAL STORAGE TANK	214
Z1187 SAND AND SEDIMENT INTERCEPTOR	215
Z1187-SI SAND INTERCEPTOR	216
Z1188 LARGE CAPACITY OIL INTERCEPTOR	217
Z1188-ST LARGE CAPACITY OIL INTERCEPTOR WITH INTEGRAL STORAGE TANK	218
Z1189 OIL/SEDIMENT INTERCEPTOR WITH HEAVY-DUTY GRATE	219
Z1194 OIL LEVEL SENSOR RETROFIT KIT	220
Z1196 OIL INTERCEPTOR WITH OIL LEVEL SENSOR	221
Z1198 LARGE CAPACITY OIL INTERCEPTOR WITH OIL LEVEL SENSOR	222
Z1198-ST LARGE CAPACITY OIL INTERCEPTOR WITH INTEGRAL STORAGE TANK AND OIL LEVEL FLOAT SENSOR	223

INTERCEPTORS – GENERAL INFORMATION

Zurn manufactures three types of interceptors to meet all your plumbing needs: grease interceptors, solids interceptors, and oil interceptors. Zurn interceptors are designed for use in plumbing wastewater systems to prevent harmful or undesirable substances from entering the waste-water control system. Note: Interceptors are not pressurized vessels and should not undergo pressure testing.

To obtain more detailed information on Zurn interceptors, phone 855-ONE-ZURN, or contact your local Zurn sales representative.

INTERCEPTORS – APPLICATION INDEX

Product selection should be made with a specific application and the type of construction in mind. The varied types and sizes of Zurn interceptors, along with their options, offer a selection for all applications.

APPLICATION	RECOMMENDED INTERCEPTOR
Cooking and Processing Kettles*; Pot, Pan, and Scullery Sinks	Z250H, Z1165, Z1170, Z1170-UN, ZS1170, Z1171, Z1171-TD, Z1172, Z1172-UN, Z1173, Z1173-TD, Z1174
Soup Kettles*	Z1165, Z1170, Z1170-UN, ZS1170, Z1171, Z1171-TD, Z1173, Z1173-TD, Z1174
Dishwashing Machines*	Z250H, Z1165, Z1170, Z1170-UN, ZS1170, Z1172, Z1172-UN, Z1173, Z1173-TD, Z1174
Grease Draw-off Units	Z250H, Z1171-TD, Z1173, Z1173-TD
Miscellaneous Equipment Holding*, Grease-Laden Water	Z250H, Z1165, Z1170, Z1170-UN, ZS1170, Z1171, Z1171-TD, Z1172, Z1172-UN, Z1173, Z1173-TD, Z1174

*A Zurn Solids Interceptor is recommended to be used in conjunction with all grease interceptors. See product information for details.

GREASE INTERCEPTORS – PURPOSE

For over a hundred years, grease interceptors have been used in plumbing wastewater systems to permit free flow of drainage from sinks and similar equipment. They have played an important role in preventing grease accumulations from clogging waste pipes and sewer lines. They also help to improve operations at wastewater treatment facilities and prevent environmental problems caused by grease.

Zurn engineers were part of the original team that developed the current Plumbing and Drainage Institute Standard PDI-G101, which was first issued in 1949. PDI-G101 is now cited in numerous codes, as well as in Military Specification MIL-T-18361. Many Zurn grease interceptors comply with PDI-G101 and carry the PDI label.

WHY ARE GREASE INTERCEPTORS NEEDED?

1. To prevent waste pipes in buildings from becoming clogged.
2. To prevent sewer lines from clogging and improve operation of water treatment plants by reducing the wastewater grease load from entering the plant.
3. To prevent environmental problems caused by grease mixed with other debris at landfills and in waterways.
4. To promote the recycling of recovered clean grease.

Grease entering the wastewater collection system presents major problems from the moment of entry and continuing to the final stage in wastewater treatment. It is an expensive burden in sewer pipes due to blockage and reduced capacity, causing the need for frequent cleaning. In severe cases, entire lengths of sewer pipe must be replaced due to solidification of the grease and other debris. Grease also causes substantial problems in wastewater treatment facilities because of its detrimental effect on the bacterial process of wastewater treatment. Not only is there a grease removal problem, but large quantities of grease can overload and compromise the digestive process, adversely affecting the operation of the wastewater treatment plant.

Another important reason for grease interception and recovery is for recycling. Grease, if recovered and purified (free of contaminants and water) can be turned into a valuable resource. Recovered grease can be used in the manufacturing of fertilizers, soaps, animal feed, cosmetics, and components of explosives such as nitroglycerine.

Four factors are critical to the proper operation of a grease interceptor: design, sizing, proper installation, and maintenance.

DESIGN

What makes Zurn interceptors most efficient are superior design characteristics (Diagram A).

Standard Zurn units are provided with a high inlet which allows all flow to empty into the interceptor. This keeps inlet lines from becoming clogged with grease buildup, which occurs with low inlet units and with large concrete separators buried outside. Because the static water level is maintained at the bottom of the outlet, any piping into the interceptor below this elevation will remain filled with water.

The Zurn solid vertical baffle plate immediately diffuses flow and channels the incoming fluids directly to the bottom of the separation chamber. A flow directing plate on the outlet side of the vertical baffle enhances flow in an upward direction and traps solids that may inadvertently enter the interceptor. This provides the maximum amount of time possible for separation to occur. Grease being approximately 90% of the weight of water, separates and floats to the top of the water under these conditions. The calming effect on the flow and the extended time sequence in the chamber allows for more efficient separation (Diagram A).

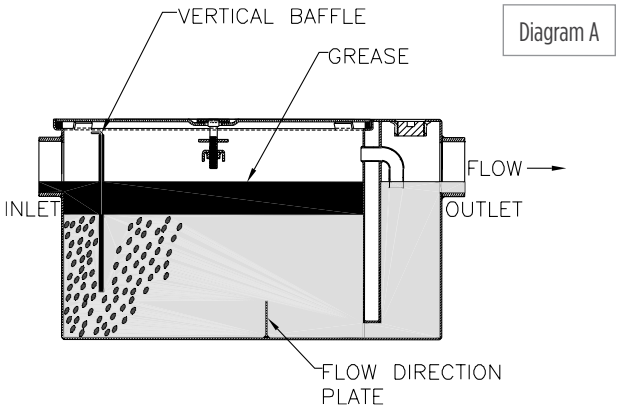

Diagram A

Zurn interceptors have an unobstructed separation chamber permitting the entire baffle to be lifted upward and removed. This provides for fast, easy cleaning which minimizes the amount of time the lid is off and the contents are exposed to the environment.

Odor from accumulated grease in an interceptor may pass back through the piping system and through the drain opening. An additional trap should be considered between the fixture and interceptor. Consult local codes.

Zurn interceptors are manufactured standard with a removable cleanout plug on the outlet side of the separation chamber, past the integral trap seal. This allows for quick, easy access to the outlet drainage pipe, should an obstruction or blockage occur downstream of the interceptor.

Zurn 1100 Series Interceptors are 100% steel construction, coated with a white acid-resisting epoxy (A.R.C.). Zurn Series Interceptors with flow rates from 4 to 50 GPM are certified by the Plumbing and Drainage Institute (PDI). Zurn Grease Interceptors with flow rates from 20 to 50 GPM are listed by the International Association of Plumbing and Mechanical Officials (IAPMO).

SIZING

The Plumbing and Drainage Institute (PDI) as well as some national and local codes have recognized different ways of sizing grease interceptors. It is advisable to check with local authorities for sizing requirements in your particular locality.

The following pages outline the most widely used sizing methods along with some common variables which, if present, could adversely affect the operation of your grease interceptor. If any of the following variables are present, added care should be taken to select the proper size interceptor with appropriate options to compensate for each irregularity.

VARIABLES AFFECTING GREASE INTERCEPTOR PERFORMANCE

VELOCITY OF INCOMING WATER

A higher velocity of water will contribute to a more turbulent mixture. This will slow the grease separation process, thereby reducing efficiency.

Recommended Solution – Maximize incoming pipe size to lower flow velocity or install additional flow control fittings at all sources of flow.

RATIO OF GREASE TO THE WATER

The higher the ratio of grease particles to the water, the lower the efficiency of the interceptor.

Recommended Solution – Increase the size of the interceptor.

SPECIFIC GRAVITY (WEIGHT) OF THE FILTRATES

Grease has a lower specific gravity than water and will rise to the surface quickly. Grease-laden food particles, having a higher specific gravity than water, will linger and accumulate at the bottom, eventually passing out of the interceptor.

Recommended Solution – Install a solids interceptor at the source of solid particles, prior to the grease interceptor.

POSSIBLE PRESENCE OF DETERGENTS IN THE SYSTEM

Grease-cutting detergents will break the liquid grease into minute particles that can cause these liquids to pass through the interceptor.

Recommended Solution – Minimize the use of detergents, or increase the size of the interceptor.

PERCENTAGE OF MAXIMUM FLOW CAPACITY

If the maximum recommended flow is exceeded, the efficiency of the interceptor will decrease considerably.

Recommended Solution – Increase size of the interceptor to accommodate the increased flow, or install additional flow control fittings at all sources of flow.

LOCATION OF GREASE INTERCEPTOR

The interceptor should be located as close as possible to the source of grease. Waste pipes leading to the grease interceptor may become clogged if liquid cools prior to entering the grease interceptor.

*Regularly furnished unless otherwise specified.

Z250H FOG-CEPTOR® INTERCEPTOR

Patented

U.S. PATENT #5,746,912
CDN PATENT #2,195,822

IAMPO Approved

ENGINEERING SPECIFICATION

Zurn Z250H FOG-ceptor is engineered fiberglass, fats, oil, and grease interceptor, and dual manway interceptor with external flow control device. PDI and IAPMO rated at 100 gpm and 200 lb. Regularly furnished with 4" [102 mm] Schedule 40 PVC inlet and outlet. Includes two 20" [508 mm] diameter H-20 rated fiberglass bolted and gasketed frames and covers, four tubes of Sikaflex® bonding agent, one external flow control device, and two 3' high x 20" [914 mm x 508 mm] diameter extension collars.

NOTES

Location of outlet from bottom of interceptor cannot be changed.

PREFIXES	DESCRIPTION	SIZE	LIST PRICE
Z250H	Fiberglass Reinforced Plastic (Engineered Fiberglass)	250	**POA**
SUFFIXES			**ADD**
–EXT-B	3' long 20" diameter extension collar with bell (2) for deeper burial (additional)		**POA**
–FC	Frame and Cover (additional)		**POA**

Size	Inlet/ Outlet inch [mm]	Flow Rate gpm [LPM]	Capacity			Approximate Weight lb [kg]
			Water gallon [L]	Grease gallon [L]	Solids gallon [L]	
250	4 [102]	100 [379]	250 [946]	189 [715]	48 [182]	230 [104]

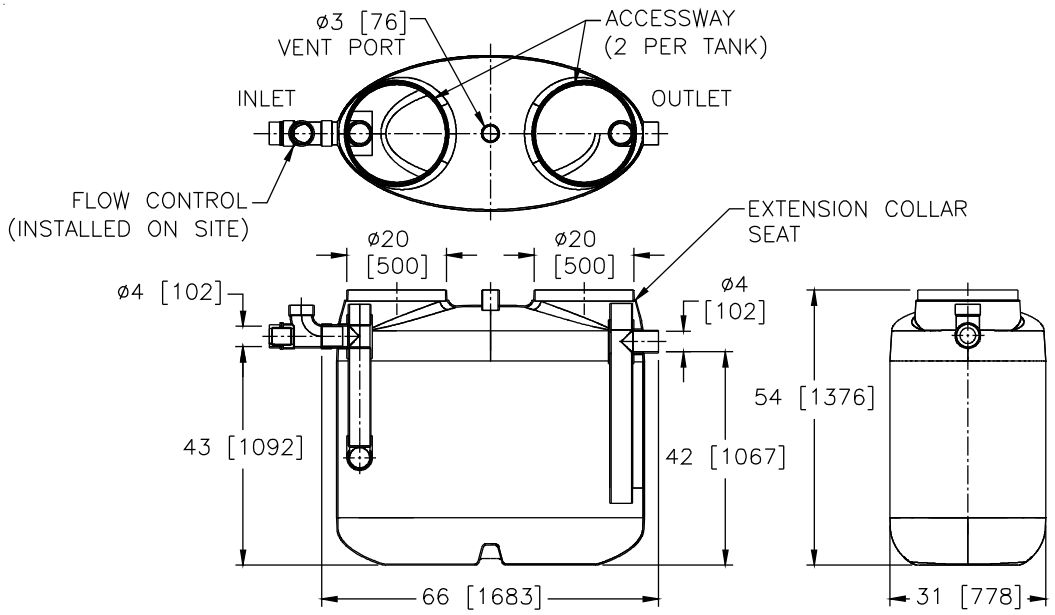

Z1165 100 PPM GREASE INTERCEPTOR SYSTEM WITH SOLIDS INTERCEPTOR

Patented

ENGINEERING SPECIFICATION

Zurn Z1165 grease interceptor system features acid resistant coated interior and fabricated steel exterior, PDI rated at ____ gpm and ____ lb grease capacity, internal air relief bypass, bronze cleanout plug, removable pressure equalizing/ flow-diffusing inlet baffle, fixed bottom outlet baffle, and visible double wall trap seal. Gasketed, non-skid, secured cover completes tie down assembly with Z1108 flow control fitting. Includes acid resistant coated fabricated steel solids interceptor with replaceable filter bags, retainer plate, latched lid, and removable sediment basket. Grease interceptor effluent efficiency meets 100 parts per million when tested to EPA 1664 test method. Results based on the influent requirements in accordance with the maximum rated capacity given by Plumbing and Drainage Institute Standard PDI-G101. The presence of solids particles may cause results to vary per application.

NOTES

Location of inlet and outlet from bottom of interceptor cannot be changed.

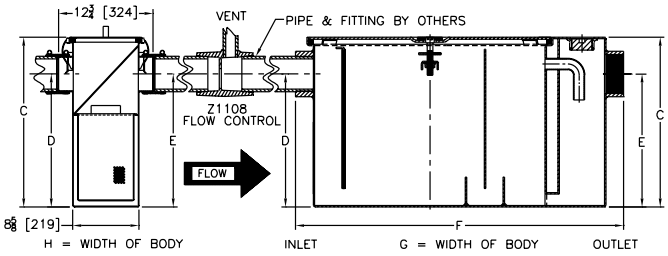

PREFIXES	DESCRIPTION	SIZE	LIST PRICE
Z1165*	Acid Resistant Coated Fabricated Steel	200	15,653.00
		300	17,576.00
		400	21,664.00
		500	28,589.00
		600	57,768.00
		700	65,108.00
		800	67,274.00
ZS1165	All Type 304 Fabricated Stainless Steel		POA

SUFFIXES		SIZE	ADD
–AL	Aluminum Cover	200-500	4,008.00
		600-800	POA

			EA. ADDITIONAL 1″ OVER 6″	UP TO 6″
–E	Acid Resistant Coated interior and exterior fabricated steel extension section (specify 'C' dimension required) for recessed installation.	200	615.00	9,919.00
		300	701.00	10,054.00
		400	768.00	11,856.00
		500	890.00	12,817.00
		600	890.00	12,817.00
		700	890.00	12,817.00
		800	890.00	12,817.00

		SIZE	ADD
–HD	Heavy Duty Cover rated at 10,000 lb maximum safe live load. A 3″ minimum extension height is required when Heavy Duty Cover option (-HD) is specified.	200	9,293.00
		300	9,817.00
		400	10,845.00
		500	11,358.00
		600	11,995.00
		700	16,503.00
		800	18,109.00

SUFFIXES		SIZE	ADD
–K	Anchor flange 1-3/4″ down from top and 2″ wide. A 3″ minimum extension height is required when anchor flange (–K) option is specified (specify 'C' dimension required).	200	2,115.00
		300	2,200.00
		400	2,315.00
		500	2,357.00
		600	2,755.00
		700	3,082.00
		800	3,693.00
–KC	Anchor flange 1-3/4″ down from top and 2″ wide with clamp collar. A 3″ minimum extension height is required when anchor flange (–KC) option is specified.	200	2,357.00
		300	2,627.00
		400	2,731.00
		500	3,105.00
		600	5,008.00
		700	5,598.00
		800	6,107.00
–L	Angle type (Z1108-L) flow control device with plunger		N/C
–LS	Less Solids Interceptor		POA
–PW	Plug Wrench		132.00
–R	Acid resistant coated interior and exterior fabricated steel recessing receiver for recessed installation is equipped with adjustable support brackets and gasketed non-skid cover with removable lift handles. Only available with sizes 200-700.	200	10,762.00
		300	11,042.00
		400	11,527.00
		500	12,176.00
		600	POA
		700	POA
–RE	Acid resistant coated interior and exterior fabricated steel recessing receiver (enclosed type) for recessed installation. Furnished with adjustable support brackets and gasketed, non-skid, secured cover with removable lift handles. Only available with sizes 200-700.	200	12,853.00
		300	13,296.00
		400	14,487.00
		500	15,256.00
		600	POA
		700	POA
–SI	Solids Interceptor Only (Specify required size.)		POA
–T	Cover recessed for tile/terrazzo. A 3″ minimum extension height is required. (Specify 'C' dimension and required recess depth: 1/8″, 3/4″, or 1-1/4″.)	200	9,498.00
		300	10,978.00
		400	13,472.00
		500	18,721.00
		600	POA
		700	POA
		800	POA
–XF	Extra Supply of 30 Solids Filter Bags		POA

Size	Inlet/ Outlet inch [mm]	Flow Rate gpm [LPM]	Capacity Water gallon [L]	Capacity Grease lb [kg]	Approximate Weight lb [kg]	Dimensions in inches [mm] C	D/E	F	G	H
200	3 [76]	7 [26]	16 [61]	14 [6]	136 [62]	15 [381]	11-3/4 [298]	29 [737]	17-1/4 [438]	17-1/4 [438]
300		10 [38]	21 [79]	20 [9]	169 [77]	17 [432]	12-7/16 [316]	31-1/4 [794]	19-7/8 [505]	19-7/8 [505]
400		15 [57]	30 [114]	30 [14]	204 [93]	18-3/4 [476]	14-3/16 [360]	33-1/8 [841]	22-1/2 [572]	22-1/2 [572]
500		20 [76]	40 [151]	40 [18]	239 [108]	21-1/2 [546]	16 [406]	35 [889]	24-1/2 [622]	
600		25 [95]	65 [246]	50 [23]	379 [172]	25-1/4 [641]	20 [508]	36 [914]	28-5/8 [727]	
700		35 [132]	110 [416]	70 [32]	476 [216]	28 [711]	23 [584]	42-3/4 [1086]	33-5/8 [854]	
800		50 [189]	150 [568]	100 [45]	823 [373]	30-1/8 [765]	24-1/2 [622]	47-1/2 [1207]	40 [1016]	

Regularly furnished unless otherwise specified.

For additional product information, please visit www.zurn.ca

Z1170 GREASE INTERCEPTOR

Sizes 100, 300-800

ENGINEERING SPECIFICATION

Zurn Z1170 grease interceptor features Dura-Coated interior and exterior fabricated steel grease interceptor, PDI rate at ____ GPM and ____ lb grease capacity, with internal air relief by-pass, cleanout plug, and trap seal with removable combination pressure equalizing/flow diffusing baffle. Gasketed non-skid secured cover complete with integral flow control fitting.

NOTES

Location of outlet from bottom of interceptor cannot be changed.

CAUTION

Solids should not be permitted to enter a grease interceptor. Where solids are present, use a Zurn Z1183 or Z1183-DF solids interceptor (see pages 207 and 208). Installations using indirect piping to unit could result in standing water in floor sink or flooding if line blockage occurs. Interceptors must be maintained periodically in order to ensure proper operation of the system. Follow cleaning schedule based on usage.

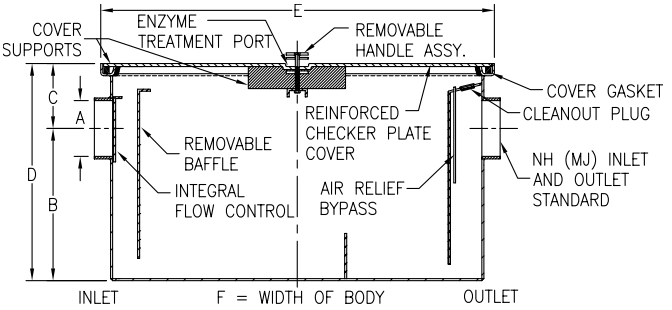

PREFIXES	DESCRIPTION	SIZE	LIST PRICE
Z1170*	Dura-Coated Fabricated Steel*	100	2,447.00
		200	1,980.00
		300	1,980.00
		400	2,156.00
		500	2,723.00
		600	3,339.00
		700	3,905.00
		800	4,235.00
		900	6,710.00
ZS1170	All Type 304 Fabricated Stainless Steel with Aluminum Cover	100	10,428.00
		200	10,430.00
		300	10,978.00
		400	11,336.00
		500	13,756.00
		600	17,017.00
		700	20,020.00
		800	23,056.00
		900	26,444.00
ZSS1170	All Type 304 Fabricated Stainless Steel with Stainless Steel Cover	100	10,780.00
		200	10,780.00
		300	11,440.00
		400	11,770.00
		500	14,190.00
		600	17,270.00
		700	20,790.00
		800	23,650.00
		900	27,060.00

SUFFIXES		SIZE	ADD
–AL	Aluminum Cover	100-400	1,672.00
		500-900	2,183.00
–DI	Dual High/Low Inlet		334.00
–EP	Enzyme Port In Cover		77.00
–75	Sediment Bucket	100-400	1,248.00
		500-900	1,602.00

			EA. ADDITIONAL 1" [25 MM] OVER 6" [152 MM]	UP TO 6" [152 MM]
–E	Acid Resistant Coated interior and exterior fabricated steel extension section (specify 'C' dimension required) for recessed installation.	100	120.00	1,485.00
		200	120.00	1,485.00
		300	120.00	1,234.00
		400	120.00	1,242.00
		500	158.00	1,349.00
		600	211.00	966.00
		700	280.00	1,495.00
		800	316.00	1,520.00
		900	360.00	1,726.00
–AR	Acid Resisting Epoxy Coated Cast Iron	100		820.00
		200		820.00
		300		1,111.00
		400		1,298.00
		500		1,606.00
		600		1,711.00
		700		2,508.00
		800		2,816.00
		900		4,125.00
–HD	Heavy duty traffic cover rated at 10,000 lb maximum safe live load. A 3" [76 mm] minimum extension height is required when Heavy Duty Cover (-HD) option is specified.	100		2,119.00
		200		2,119.00
		300		2,370.00
		400		2,621.00
		500		2,621.00
		600		2,621.00
		700		3,742.00
		800		3,742.00
		900		5,059.00
–K	Anchor flange 1-3/4" [44 mm] down from top and 2" [51 mm] wide. A 3" [76 mm] minimum extension height is required when anchor flange (–K) option is specified (specify 'C' dimension required).	100		1,224.00
		200		1,224.00
		300		1,224.00
		400		1,224.00
		500		1,224.00
		600		1,224.00
		700		1,224.00
		800		1,224.00
		900		1,224.00

For additional product information, please visit www.zurn.ca

**Regularly furnished unless otherwise specified.*

Z1170 GREASE INTERCEPTOR *(CONTINUED)*

SUFFIXES		SIZE	ADD
–KC	Anchor flange 1-3/4″ [44 mm] down from top and 2″ [51 mm] wide with clamp collar. A 3″ [76 mm] minimum extension height is required when anchor flange (–KC) option is specified.	100	1,505.00
		200	1,505.00
		300	1,505.00
		400	1,505.00
		500	1,505.00
		600	1,505.00
		700	1,505.00
		800	1,505.00
		900	1,505.00
–L	Angle type (Z1108-L) flow control device with plunger		434.00
–R	Acid resistant coated interior and exterior fabricated steel recessing receiver for recessed installation is equipped with adjustable support brackets and gasketed non-skid cover with removable lift handles.	100-900	POA
–RE	Acid resistant coated interior and exterior fabricated steel recessing receiver enclosed type for recessed installation. Furnished with adjustable support brackets and gasketed, non-skid, secured cover with removable lift handles.	100	7,975.00
		200	7,975.00
		300	8,360.00
		400	8,690.00
		500	10,560.00
		600	12,815.00
		700	15,235.00
		800	17,424.00
		900	19,855.00
–T	Cover recessed for tile/terrazzo. A 3″ [76 mm] minimum extension height is required. (Specify 'C' dimension and required recess depth: 1/8″ [3 mm], 3/4″[19 mm], or 1-1/4″ [32 mm].)	100-900	POA

Size	Inlet/ Outlet inch [mm]	Flow Rate gpm [LPM]	Capacity		Approximate Weight lb [kg]	Dimensions in inches [mm]				
			Water gal. [L]	Grease lb [kg]		B	C	D	E	F
100	2 [51]	4 [15]	3 [11]	8 [4]	42 [19]	7-1/2 [191]	6 [152]	13-1/2 [343]	17-1/4 [438]	12-1/2 [318]
200		7 [26]	5 [19]	14 [6]	53 [24]	7-1/2 [191]	6 [152]	13-1/2 [343]	17-1/4 [438]	12-1/2 [318]
300		10 [38]	6 [23]	20 [9]	66 [30]	7-1/2 [191]	6 [152]	13-1/2 [343]	20-1/4 [514]	16-1/4 [413]
400		15 [57]	10 [38]	30 [14]	83 [38]	11-1/2 [292]	6 [152]	17-1/2 [445]	20-1/4 [514]	16-1/4 [413]
500	3 [76]	20 [76]	16 [61]	40 [18]	99 [45]	13-1/2 [343]	6 [152]	19-1/2 [495]	20-1/4 [514]	19-1/4 [489]
600		25 [95]	21 [79]	50 [23]	124 [56]	15-1/2 [394]	6 [152]	21-1/2 [546]	20-1/4 [514]	19-1/4 [489]
700	4 [102]	35 [132]	30 [114]	70 [32]	151 [68]	13-1/2 [343]	6 [152]	19-1/2 [495]	32-1/4 [819]	24-1/4 [616]
800		50 [189]	40 [151]	100 [45]	180 [82]	17-1/2 [445]	6 [152]	23-1/2 [597]	32-1/4 [819]	24-1/4 [616]
900		75 [284]	65 [246]	150 [68]	282 [128]	26 [662]	6 [152]	32 [814]	40-1/4 [1014]	24-1/4 [616]

**Regularly furnished unless otherwise specified.*

Z1170-UN GREASE INTERCEPTOR WITH USER NOTIFICATION SYSTEM

ENGINEERING SPECIFICATION

Zurn Z1170-UN Grease Interceptor features a Dura-Coated interior and exterior fabricated steel grease interceptor, rated at _____ GPM and _____ lb grease capacity, with internal air relief by-pass, bronze cleanout plug, removable pressure equalizing/flow diffusing inlet baffle, fixed bottom outlet baffle, and visible double wall trap seal. Gasketed non-skid secured cover complete with center tie down assembly. Includes encased fiberglass sensor box (Z1194) containing an electronic grease level sensor, and a fiberglass display box with green power light, red grease level light, audio alarm, and juction box. Regularly furnished with a high inlet and outlet connection.

NOTES

1. Location of outlet from bottom of interceptor cannot be changed.
2. Factory installed sensor box is mounted on the left- or right-hand side of the unit when facing inlet (must be specified).
3. Power supply 120V GFCI.

RECOMMENDED INSTALLATIONS

Sitting on the floor or recessed in a pit only. (A pit installation requires that a drain or sump pump be installed to keep the pit relatively dry.)

CAUTION

Solids should not be permitted to enter a grease interceptor. Where solids are present, use a Zurn Z1183 or Z1183-DF solids interceptor (see pages 207 and 208). Installations using indirect piping to unit could result in standing water in floor sink or flooding if line blockage occurs. Interceptors must be maintained periodically in order to ensure proper operation of the system. Follow cleaning schedule based on usage.

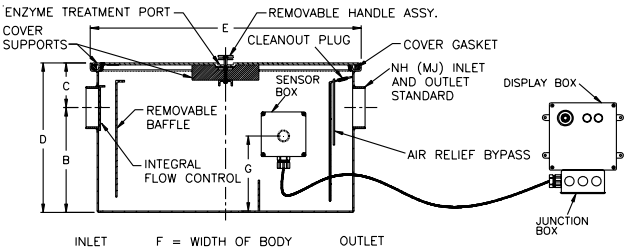

PREFIXES	DESCRIPTION		LIST PRICE
Z1170-UN*	Dura-Coated Fabricated Steel*	400	9,017.00
		500	9,793.00
		600	10,643.00
		700	11,432.00
		800	11,896.00
		900	13,507.00
ZS1170-UN	All Type 304 Fabricated Stainless Steel with Aluminum Cover	400-900	POA
ZSS1170-UN	All Type 304 Fabricated Stainless Steel with Stainless Steel Cover	400-900	POA

SUFFIXES		SIZE	ADD
–AL	Aluminum Cover	400	1,672.00
		500-800	2,183.00
–L	Angle Type (Z1108-L) Flow Control Device with Plunger		434.00

Size	Inlet/Outlet inch [mm]	Flow Rate gpm [LPM]	Capacity		Approximate Weight lb [kg]	Dimensions in inches [mm]					
			Water gal. [L]	Grease lb [kg]		B	C	D	E	F	G
400	2 [51]	15 [57]	10 [38]	30 [14]	89 [40]	11-1/2 [292]	6 [152]	17-1/2 [445]	20-1/4 [514]	16-1/4 [413]	5-11/16 [144]
500	3 [76]	20 [76]	16 [61]	40 [18]	110 [50]	13-1/2 [343]	6 [152]	19-1/2 [495]	20-1/4 [514]	19-1/4 [489]	7-3/4 [197]
600		25 [95]	23 [87]	50 [23]	117 [53]	15-1/2 [394]	6 [152]	21-1/2 [546]	20-1/4 [514]	19-1/4 [489]	8-1/2 [216]
700	4 [102]	35 [132]	30 [114]	70 [32]	172 [78]	13-1/2 [343]	6 [152]	19-1/2 [495]	32-1/4 [819]	24-1/4 [616]	9-7/8 [251]
800		50 [189]	40 [151]	100 [45]	194 [88]	17-1/2 [445]	6 [152]	23-1/2 [597]	32-1/4 [819]	24-1/4 [616]	11 [279]
900		75 [284]	65 [246]	150 [68]	282 [128]	26 [662]	6 [152]	32 [814]	40-1/4 [1014]	24-1/4 [616]	11-1/4 [285]

For additional product information, please visit www.zurn.ca

**Regularly furnished unless otherwise specified.*

ZS1170 GREASE INTERCEPTOR STAINLESS STEEL

Sizes 500-800

ENGINEERING SPECIFICATION

Zurn ZS1170 all type 304 grease interceptor features fabricated stainless steel, PDI rated at ____ gpm and ____lb grease capacity, internal air relief bypass, bronze, and visible double wall trap seal with removable combination pressure equalizing/flow-diffusing baffle and sediment tray. Gasketed, non-skid, secured cover comes complete with Z1108 flow control fitting. Regularly furnished inlet and outlet in high position.

NOTES

Location of outlet from bottom of interceptor cannot be changed.

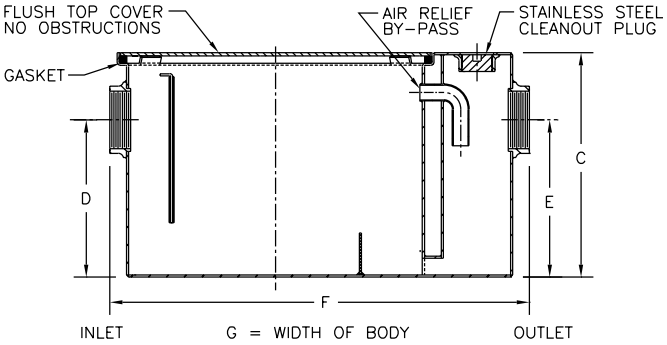

PREFIXES	DESCRIPTION	SIZE	LIST PRICE
ZS1170*	All Type 304 Fabricated Stainless Steel	100	POA
		200	POA
		300	POA
		400	POA
		500	POA
		600	POA
		700	POA
		800	POA

SUFFIXES			ADD
–DI	Dual High/Low Inlet		334.00

		SIZE	EA. ADDITIONAL 1" OVER 6"	UP TO 6"
–E	Fabricated stainless steel extension section (specify 'C' dimension required) for recessed installation.	100	120.00	1,485.00
		200	120.00	1,485.00
		300	120.00	1,234.00
		400	120.00	1,242.00
		500	158.00	1,349.00
		600	211.00	966.00
		700	280.00	1,495.00
		800	316.00	1,520.00

		SIZE	ADD
–HD	Heavy duty traffic cover rated at 10,000 lb maximum safe live load. A 3" minimum extension height is required when Heavy Duty Cover (-HD) option is specified.	100	2,119.00
		200	2,119.00
		300	2,370.00
		400	2,621.00
		500	2,621.00
		600	2,621.00
		700	3,742.00
		800	3,742.00
–K	Anchor flange 1-3/4" down from top and 2" wide. A 3" minimum extension height is required when anchor flange (–K) option is specified (specify 'C' dimension required).	100	1,224.00
		200	1,224.00
		300	1,224.00
		400	1,224.00
		500	1,224.00
		600	1,224.00
		700	1,224.00
		800	1,224.00

SUFFIXES		SIZE	ADD
–KC	Anchor flange 1-3/4" down from top and 2" wide with clamp collar. A 3" minimum extension height is required when anchor flange (–KC) option is specified.	100	1,505.00
		200	1,505.00
		300	1,505.00
		400	1,505.00
		500	1,505.00
		600	1,505.00
		700	1,505.00
		800	1,505.00
–L	Angle type (Z1108-L) flow control device with plunger (Acid Resistant Coated cast iron)		434.00
–R	Fabricated stainless steel recessing receiver for recessed installation is equipped with adjustable support brackets and gasketed, non-skid, secured cover with removable lift handles.	100	POA
		200	POA
		300	POA
		400	POA
		500	POA
		600	POA
		700	POA
		800	POA
–RE	Fabricated stainless steel recessing receiver enclosed type for recessed installation. Furnished with adjustable support brackets and gasketed, non-skid, secured cover with removable lift handles.	100	POA
		200	POA
		300	POA
		400	POA
		500	POA
		600	POA
		700	POA
		800	POA
–T	Cover recessed for tile/terrazzo. A 3" minimum extension height is required. (Specify 'C' dimension and required recess depth: 1/8", 3/4", or 1-1/4".)	100	POA
		200	POA
		300	POA
		400	POA
		500	POA
		600	POA
		700	POA
		800	POA

Size	Inlet/Outlet inch [mm]	Flow Rate gpm [LPM]	Capacity		Approximate Weight lb [kg]	Dimensions in inches [mm]			
			Water gallon [L]	Grease lb [kg]		C	D/E	F	G
100	2 [51]	4 [15]	3 [11]	8 [4]	42 [19]	10 [254]	7-1/4 [184]	20-3/8 [518]	9-7/8 [251]
200		7 [26]	5 [19]	14 [6]	53 [24]	11-1/4 [286]	8-1/8 [206]	21-3/4 [552]	11-7/8 [302]
300		10 [38]	6 [23]	20 [9]	66 [30]	11-3/4 [298]	8-1/4 [210]	25-1/8 [638]	14 [356]
400	3 [76]	15 [57]	10 [38]	30 [14]	83 [38]	13-3/8 [340]	9-3/8 [238]	27-1/8 [689]	16-3/4 [425]
500		20 [76]	16 [61]	40 [18]	99 [45]	15 [381]	11-3/4 [298]	30 [762]	17-1/4 [438]
600		25 [95]	21 [79]	50 [23]	124 [56]	17 [432]	12-1/2 [318]	32-1/4 [819]	19-7/8 [505]
700		35 [132]	30 [114]	70 [32]	151 [68]	18-3/4 [476]	14-1/4 [362]	34-1/8 [867]	22-1/2 [572]
800		50 [189]	40 [151]	100 [45]	180 [82]	21-1/2 [546]	16 [406]	36 [914]	24-1/2 [622]

*Regularly furnished unless otherwise specified.

For additional product information, please visit www.zurn.ca

Z1171 LOW PROFILE GREASE INTERCEPTOR

ENGINEERING SPECIFICATION

Zurn Z1171 low profile grease interceptor features a Dura-Coated interior and exterior fabricated steel low type grease interceptor, PDI rated at ___GPM and ___lb grease capacity with internal air relief by-pass, bronze cleanout plug, and trap seal with removable combination pressure equalizing/flow diffusing baffles. Gasketed secured cover, complete with integral flow control fitting.

CAUTION

Solids should not be permitted to enter a grease interceptor. Where solids are present, use a Zurn Z1183 or Z1183-DF solids interceptor (see pages 207 and 208). Installations using indirect piping to unit could result in standing water in floor sink or flooding if line blockage occurs. Interceptors must be maintained periodically in order to ensure proper operation of the system. Follow cleaning schedule based on usage.

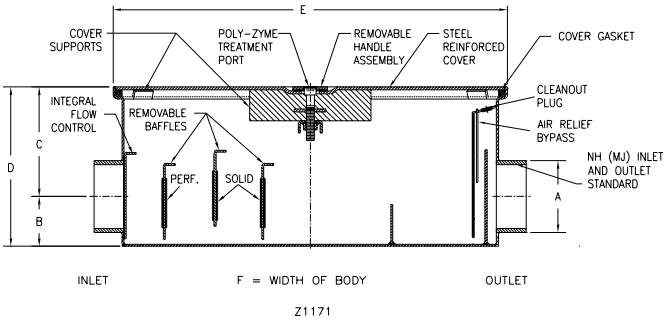

PREFIXES	DESCRIPTION	SIZE	LIST PRICE
Z1171*	Dura-Coated Fabricated Steel*	500	**4,120.00**
		700	**4,664.00**
		800	**6,050.00**
ZS1171	All Type 304 Fabricated Stainless Steel with Aluminum Cover	500	**18,150.00**
		700	**23,650.00**
		800	**24,750.00**
ZSS1171	All Type 304 Fabricated Stainless Steel with Stainless Steel Cover	500	**20,680.00**
		700	**26,180.00**
		800	**27,280.00**

SUFFIXES	DESCRIPTION	ADD
–DI	Dual Inlet	**334.00**
–EP	Enzyme Port in Cover	**434.00**
–L	Angle Type (Z1108-L) Flow Control Device with Plunger	**86.00**

Size	Inlet/Outlet inch [mm]	Flow Rate gpm [LPM]	Capacity		Approximate Weight lb [kg]	Dimensions in inches [mm]				
			Water gal. [L]	Grease lb [kg]		B	C	D	E	F
500	3 [76]	20 [76]	15 [57]	40 [18]	93 [42]	3-1/8 [79]	6-7/8 [175]	10-1/8 [257]	31-3/8 [797]	21-1/2 [546]
700	4 [102]	35 [132]	30 [114]	70 [32]	147 [67]	3-3/8 [86]	7-1/2 [191]	10-7/8 [276]	42-5/8 [1083]	28-7/8 [733]
800		50 [189]	45 [170]	100 [45]	250 [113]				46-5/8 [1184]	

For additional product information, please visit www.zurn.ca

**Regularly furnished unless otherwise specified.*

Z1171-TD LOW PROFILE GREASE INTERCEPTOR WITH ACCUMULATING CONE AND FLOW CONTROL TEE

ENGINEERING SPECIFICATION

Zurn Z1171-TD low profile grease interceptor features acid resistant coated interior and fabricated steel exterior, PDI rated at ____gpm and ____lb grease capacity, internal air relief bypass, bronze cleanout plug, and visible double wall trap seal with removable combination pressure equalizing/flow-diffusing baffle and sediment tray. Gasketed, non-skid, secured cover comes complete with draw-off port having bronze plug, grease accumulating cone, NPT to hose adapter, 2-foot flexible hose, hose clamp, and in-line closure valve, complete with Z1108 flow control fitting. Regularly furnished with 3" [76 mm] low inlet and outlet.

CAUTION

Solids should not be permitted to enter a grease interceptor. Where solids are present, use a Zurn Z1183 or Z1183-DF solids interceptor (see pages 207 and 208). Installations using indirect piping to unit could result in standing water in floor sink or flooding if line blockage occurs. Interceptors must be maintained periodically in order to ensure proper operation of the system. Follow cleaning schedule based on usage.

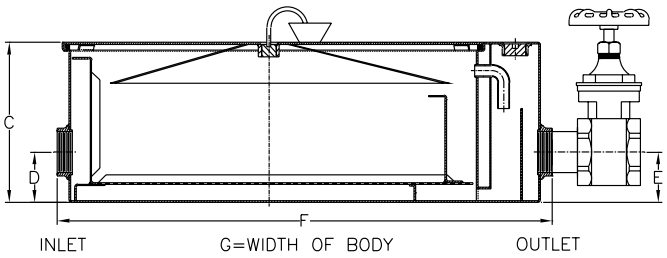

PREFIXES	DESCRIPTION	SIZE	LIST PRICE
Z1171-TD*	Acid Resistant Coated Fabricated Steel	500	9,757.00
		700	11,247.00
		800	12,368.00

SUFFIXES	DESCRIPTION	ADD
–L	Angle Type (Z1108-L) Flow Control Device with Plunger	N/C
–PW	Plug Wrench	132.00

Size	Inlet/Outlet inch [mm]	Flow Rate gpm [LPM]	Capacity		Approximate Weight lb [kg]	Dimensions in inches [mm]				
			Water gallon [L]	Grease lb [kg]		C	D/E	F	G	H
500	3 [76]	20 [76]	15 [57]	40 [18]	102 [46]	10 [254]	3-1/8 [79]	31 [787]	21-1/8 [537]	6-3/4 [171]
700		35 [132]	30 [114]	70 [32]	172 [78]	10-3/4 [273]		42-1/8 [1070]	29-3/8 [746]	7 [178]
800		50 [189]	45 [170]	100 [45]	210 [95]	16 [406]	10 [254]	49-1/2 [1257]		10 [254]

*Regularly furnished unless otherwise specified.

Z1172 LARGE CAPACITY GREASE INTERCEPTOR

ENGINEERING SPECIFICATION

Zurn Z1172 large capacity grease interceptor features a Dura-Coated interior and exterior fabricated steel grease interceptor, rated at ____ GPM and ____ lb grease capacity, with internal air relief by-pass, cleanout plug, and visible double wall trap seal with removable pressure equalizing/ flow diffusing baffle. Gasketed non-skid secured cover and bronze cleanout plug complete with flow control fitting.

CAUTION

Solids should not be permitted to enter a grease interceptor. Where solids are present, use a Zurn Z1183 or Z1183-DF solids interceptor (see pages 207 and 208). Installations using indirect piping to unit could result in standing water in floor sink or flooding if line blockage occurs. Interceptors must be maintained periodically in order to ensure proper operation of the system. Follow cleaning schedule based on usage.

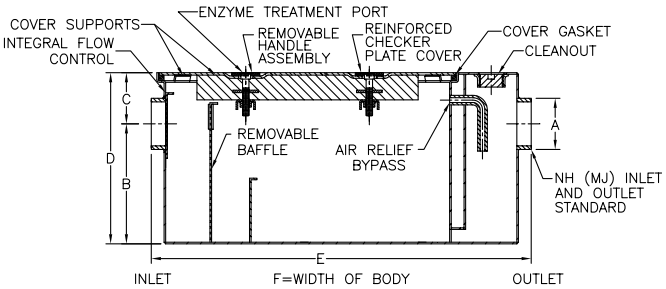

PREFIXES	DESCRIPTION	SIZE	LIST PRICE
Z1172*	Acid Resistant Coated Fabricated Steel*	1000	12,340.00
		1100	15,139.00
		1200	16,574.00
		1300	19,912.00
		1400	23,008.00
		1500	26,075.00
		1600	33,257.00
		1700	37,033.00
		1800	37,033.00
		1900	43,912.00
ZS1172	All Type 304 Fabricated Stainless Steel with Aluminum Cover	1000	37,400.00
		1100	49,500.00
		1200	68,200.00
		1300	93,500.00
		1400	104,500.00
		1500	137,500.00
		1600	148,500.00
		1700	236,500.00
		1800	269,500.00
		1900	294,800.00
ZSS1172	All Type 304 Fabricated Stainless Steel with Stainless Steel Cover	1000	40,700.00
		1100	55,000.00
		1200	75,900.00
		1300	101,200.00
		1400	110,000.00
		1500	150,700.00
		1600	165,000.00
		1700	247,500.00
		1800	291,500.00
		1900	319,000.00

SUFFIXES	DESCRIPTION	ADD
–CC	8″ [203 mm] Diameter Cleanout Cover	1,139.00
–DI	Dual Inlet	333.00

		SIZE	EA. ADDITIONAL 1″ OVER 10″	UP TO 10″
–E	Acid-resistant coated exterior fabricated steel extension section (specify 'C' Dim. Required for recessed installation	1000	405.00	1,535.00
		1100	436.00	1,542.00
		1200	473.00	1,542.00
		1300	519.00	1,832.00
		1400	600.00	1,833.00
		1500	645.00	1,833.00
		1600	668.00	1,833.00
		1700	720.00	1,833.00
		1800	720.00	1,833.00
		1900	957.00	2,353.00

SUFFIXES	DESCRIPTION	SIZE	ADD
–AL	Aluminum Cover	1000	2,475.00
		1100	3,960.00
		1200	4,455.00
		1300	4,730.00
		1400	7,810.00
		1500	9,350.00
		1600	11,000.00
		1700	13,530.00
		1800	16,830.00
		1900	21,450.00
–AR	Acid Resisting Epoxy Coated Cast Iron	1000	4,224.00
		1100	7,838.00
		1200	9,009.00
		1300	10,791.00
		1400	13,508.00
		1500	24,860.00
		1600	27,610.00
		1700	31,449.00
		1800	33,000.00
		1900	34,650.00
–HD	Heavy-duty traffic cover rated at 10,000 lb [4536 kg] maximum safe live load	1000	6,602.00
		1100	6,602.00
		1200	6,729.00
		1300	7,224.00
		1400	7,377.00
		1500	7,724.00
		1600	8,472.00
		1700	8,970.00
		1800	8,970.00
		1900	9,343.00

For additional product information, please visit www.zurn.ca

**Regularly furnished unless otherwise specified.*

Z1172 LARGE CAPACITY GREASE INTERCEPTOR

SUFFIXES	DESCRIPTION	SIZE	ADD
–K	Anchor flange 1-3/4″ [44 mm] down from top and 2″ [51 mm] wide. No extension required to accommodate -K option	1000	1,515.00
		1100	1,515.00
		1200	1,515.00
		1300	1,515.00
		1400	1,515.00
		1500	1,515.00
		1600	1,515.00
		1700	1,515.00
		1800	1,515.00
		1900	1,515.00
–KC	Anchor flange 1-3/4″ [44 mm] down from top and 2″ [51 mm] wide with clamp collar. No extension required to accommodate -KC option	1000	1,834.00
		1100	1,834.00
		1200	1,834.00
		1300	1,834.00
		1400	1,834.00
		1500	1,834.00
		1600	1,834.00
		1700	1,834.00
		1800	1,834.00
		1900	1,834.00
–L	Angle type (Z1108-L) flow control device with plunger		434.00

Size	Inlet/ Outlet inch [mm]	Flow Rate gpm [LPM]	Capacity		No. of Covers	Approximate Weight lb [kg]	Dimensions in inches [mm]				
			Water gal. [L]	Grease lb [kg]			B	C	D	E	F
1000	4 [102]	100 [379]	110 [416]	200 [91]	1	289 [131]	23 [584]	4 [102]	27 [686]	41-3/4 [1060]	33-5/8 [854]
1100		125 [473]	150 [568]	250 [113]	2	536 [243]	24-1/2 [622]	5-5/8 [143]	30-1/8 [765]	48-1/4 [1226]	40 [1016]
1200		150 [568]	195 [738]	300 [136]		616 [279]	25-1/4 [641]	5-1/2 [140]	30-3/4 [781]	55 [1397]	41-5/8 [1057]
1300		200 [757]	270 [1022]	400 [1881]		738 [335]	29-7/8 [759]	5-5/8 [143]	35-1/2 [902]	60 [1524]	43-5/8 [1108]
1400		250 [946]	465 [1760]	500 [227]		924 [419]	36 [914]	5 [127]	41 [1041]	70 [1778]	51-5/8 [1311]
1500	6 [152]	300 [1136]	665 [2517]	600 [272]		1700 [771]	39-5/8 [1006]	6-5/8 [168]	46-1/4 [1175]	79 [2007]	58-5/8 [1489]
1600		350 [1325]	865 [3274]	700 [318]		1890 [857]	43-7/8 [1114]		50-1/2 [1283]	86 [2184]	63-5/8 [1616]
1700		400 [1514]	1095 [4145]	800 [363]	3	2150 [975]	47-5/8 [1210]		54-1/4 [1378]	93 [2362]	70-1/4 [1784]
1800		450 [1703]	1280 [4845]	900 [408]		2300 [1043]	48-5/8 [1235]		55-1/4 [1403]	99 [2515]	75-1/4 [1911]
1900		500 [1893]	1440 [5451]	1000 [454]		2400 [1089]	51-5/8 [1311]	5-5/8 [143]	57-1/4 [1454]	103 [2616]	77-1/4 [1962]

*Regularly furnished unless otherwise specified.

Z1172-UN LARGE CAPACITY GREASE INTERCEPTOR WITH USER NOTIFICATION SYSTEM

ENGINEERING SPECIFICATION

Zurn Z1172-UN Large capacity, Acid Resistant Coated interior and exterior fabricated steel grease interceptor, rated at ____gpm and ____lb grease capacity, with internal air relief bypass, bronze cleanout plug, and visible double wall trap seal with removable pressure equalizing/ flow-diffusing baffle. Gasketed, non-skid, secured cover with removable lift handles complete with flow control fitting. Includes encased fiberglass sensor box containing an electronic grease level sensor (specify right or left side†), a fiberglass display box with one green power light, red grease level light, audio alarm, and junction box. Regularly furnished with inlet and outlet in high position.

NOTES

1. Location of inlet/outlet from bottom of interceptor cannot be changed. Power supply 120V GFCI.
2. †Sensor box is mounted on the left- or right-hand side of the unit when facing inlet (must be specified).
3. Size 1000 requires one cover.
4. Sizes 1100 and 1600 require two covers.
5. Sizes 1700 thru 1900 require three covers.

RECOMMENDED INSTALLATIONS

Sitting on the floor or recessed in a pit only. (A pit installation requires that a drain or sump pump be installed to keep the pit relatively dry.)

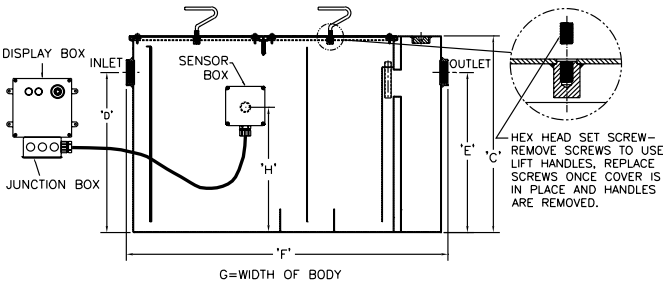

PREFIXES	DESCRIPTION	SIZE	LIST PRICE
Z1172-UN*	Acid Resistant Coated Fabricated Steel	1000	12,546.00
		1100	15,483.00
		1200	18,167.00
		1300	20,983.00
		1400	23,419.00
		1500	26,928.00
		1600	36,075.00
		1700	60,654.00
		1800	69,801.00
		1900	76,032.00
ZS1172	All Type 304 Fabricated Stainless Steel		POA

SUFFIXES	DESCRIPTION	ADD
–AL	Aluminum Cover	2,200.00
–L	Angle type (Z1108-L) flow control device with plunger	N/C
–PW	Plug Wrench	132.00

Size	Inlet/Outlet inch [mm]	Flow Rate gpm [LPM]	Capacity		Approximate Weight lb [kg]	Dimensions in inches [mm]				
			Water gallon [L]	Grease lb [kg]		C	D/E	F	G	H
1000	3 [76]	100 [379]	110 [416]	200 [91]	408 [185]	27 [686]	23 [584]	42-3/4 [1086]	33-5/8 [854]	16-1/8 [410]
1100		125 [473]	150 [568]	250 [113]	749 [340]	30-1/8 [765]	24-1/2 [622]	49-1/4 [1251]	40 [1016]	16-5/16 [414]
1200	4 [102]	150 [568]	195 [738]	300 [136]	856 [388]	30-3/4 [781]	25-1/4 [641]	56 [1422]	41-5/8 [1057]	18-1/16 [459]
1300		200 [757]	270 [1022]	400 [181]	1016 [461]	35-1/2 [902]	29-7/8 [759]	61 [1549]	43-5/8 [1108]	21-7/8 [556]
1400	5 [127]	250 [946]	465 [1760]	500 [227]	1384 [628]	41 [1041]	36 [914]	71 [1803]	51-5/8 [1311]	28-9/16 [713]
1500		300 [1136]	665 [2517]	600 [272]	1770 [803]	46-1/4 [1175]	39-5/8 [1006]	80 [2032]	58-5/8 [1489]	32-1/2 [826]
1600	6 [152]	350 [1325]	865 [3274]	700 [318]	2096 [951]	50-1/2 [1283]	43-7/8 [1114]	87 [2210]	63-5/8 [1616]	35-7/8 [911]
1700		400 [1514]	1095 [4145]	800 [363]	2440 [1107]	54-1/4 [1378]	47-5/8 [1210]	94 [2388]	67 [1702]	39-3/4 [1010]
1800		450 [1703]	1280 [4845]	900 [408]	2710 [1229]	55-1/4 [1403]	48-5/8 [1235]	100 [2540]	72 [1829]	40-7/8 [1038]
1900		500 [1893]	1440 [5451]	1000 [454]	2857 [1296]	57-1/4 [1454]	51-5/8 [1311]	104 [2642]	74 [1880]	43-5/8 [1108]

For additional product information, please visit www.zurn.ca

**Regularly furnished unless otherwise specified.*

Z1173 EJECTO-MATIC GREASE INTERCEPTOR

Sizes 1600-1900

Sizes 200-800

ENGINEERING SPECIFICATION

Zurn Z1173 ejecto-matic grease interceptor features acid resistant coated interior and fabricated steel exterior, PDI rated at ____gpm and ____lb grease capacity, internal air relief bypass, bronze cleanout plug, and visible double wall trap seal with removable combination pressure equalizing/flow-diffusing baffle and sediment tray and grease retention tray adjacent to grease draw-off valve. Gasketed, non-skid, secured cover comes complete with Z1108 flow control fitting. Regularly furnished with high inlet and outlet connection.

NOTES

1. Location of outlet from bottom of interceptor cannot be changed. Draw-off connection regularly furnished on outlet side.
2. On sizes #200 and #300, the grease draw-off valve is located on the left-hand side of the trap when facing the inlet, instead of on the outlet side as shown.

CAUTION

Solids should not be permitted to enter a grease interceptor.

Where solids are present, use a Zurn Z1183 or Z1183-DF solids interceptor (see pages 207 and 208).

Installations using indirect piping to unit could result in standing water in floor sink or flooding if line blockage occurs.

Interceptors must be maintained periodically in order to ensure proper operation of the system. Follow cleaning schedule based on usage.

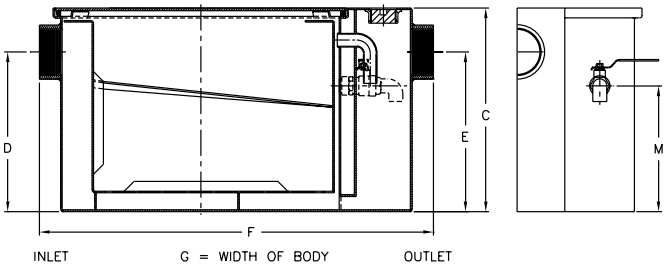

PREFIXES	DESCRIPTION	SIZE	LIST PRICE
Z1173*	Acid Resistant Coated Fabricated Steel	200	5,598.00
		300	6,030.00
		400	6,461.00
		500	6,893.00
		600	7,830.00
		700	9,474.00
		800	10,587.00
		900	18,084.00
ZS1173	All Type 304 Fabricated Stainless Steel		POA
SUFFIXES	**DESCRIPTION**	**SIZE**	**ADD**
–L	Angle type (Z1108-L) flow control device with plunger		434.00
–PW	Plug Wrench		132.00
–R	Acid Resistant Coated interior and exterior fabricated steel recessing receiver for recessed installation. Furnished with adjustable support brackets and gasketed, non-skid, secured cover with removable lift handles.	200	POA
		300	POA
		400	POA
		500	POA
		600	POA
		700	POA
		800	POA
		900	POA
–RE	Acid Resistant Coated interior and exterior fabricated steel recessing receiver enclosed type for recessed installation. Furnished with adjustable support brackets and gasketed, non-skid, secured cover with removable lift handles.	200	POA
		300	POA
		400	POA
		500	POA
		600	POA
		700	POA
		800	POA
		900	POA

Size	Inlet/Outlet inch [mm]	Flow Rate gpm [LPM]	Capacity		Approximate Weight lb [kg]	Dimensions in inches [mm]				
			Water gallon [L]	Grease lb [kg]		C	D/E	F	G	M C/L Valve
200	2 [51]	7 [26]	5 [19]	14 [6]	56 [25]	11-1/4 [286]	8-1/8 [206]	21-3/4 [552]	11-7/8 [302]	6-1/8 [156]
300		10 [38]	6 [23]	20 [9]	70 [32]	11-3/4 [298]	8-1/4 [210]	25-1/8 [638]	14 [356]	5-3/4 [146]
400	3 [76]	15 [57]	10 [38]	30 [14]	87 [39]	13-3/8 [340]	9-3/8 [238]	27-1/8 [689]	16-3/4 [425]	6-7/8 [175]
500		20 [76]	16 [61]	40 [18]	104 [47]	15 [381]	11-3/4 [298]	30 [762]	17-1/4 [438]	9-1/4 [235]
600		25 [95]	21 [79]	50 [23]	129 [59]	17 [432]	12-1/2 [318]	32-1/4 [819]	19-7/8 [505]	9-1/2 [241]
700		35 [132]	30 [114]	70 [32]	156 [71]	18-3/4 [476]	14-1/4 [362]	34-1/8 [867]	22-1/2 [572]	11-1/4 [286]
800		50 [189]	40 [151]	100 [45]	186 [84]	21-1/2 [546]	16 [406]	36 [914]	24-1/2 [622]	13 [330]
900		75 [284]	65 [246]	150 [68]	316 [143]	22-3/4 [578]	18-1/2 [470]		28-5/8 [727]	15-1/2 [394]

*Regularly furnished unless otherwise specified.

For additional product information, please visit www.zurn.ca

Z1173-TD EJECTO-MATIC GREASE INTERCEPTOR WITH GREASE ACCUMULATING CONE AND IN-LINE SHUTOFF VALVE

Sizes
200-800

ENGINEERING SPECIFICATION

Zurn Z1173-TD ejecto-matic grease interceptor features acid resistant coated interior and fabricated steel exterior, PDI rated at ____gpm and ____lb grease capacity, internal air relief bypass, bronze cleanout plug, and visible double wall trap seal with removable combination pressure equalizing/flow-diffusing baffle and sediment tray. Gasketed, non-skid, secured cover comes complete with draw-off port having a bronze plug, grease accumulating cone, NPT to hose adapter, 2-foot flexible hose, hose clamp, in-line closure valve, and Z1108 flow control fitting. Regularly furnished with high inlet and outlet connection.

NOTES

Location of outlet from bottom of interceptor cannot be changed.

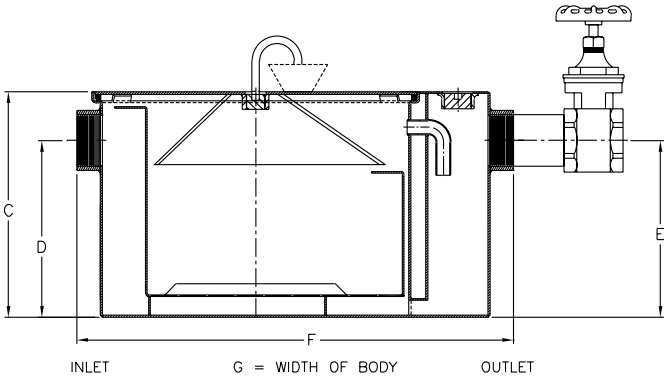

PREFIXES	DESCRIPTION	SIZE	LIST PRICE
Z1173-TD*	Acid Resistant Coated Fabricated Steel	200	6,658.00
		300	6,906.00
		400	7,144.00
		500	9,470.00
		600	8,770.00
		700	9,559.00
		800	10,020.00
		900	13,420.00

SUFFIXES	DESCRIPTION	SIZE	ADD
–L	Angle type (Z1108-L) flow control device with plunger		434.00
–PW	Plug Wrench		132.00
–R	Acid Resistant Coated interior and exterior fabricated steel recessing receiver for recessed installation. Furnished with adjustable support brackets and gasketed, non-skid, secured cover with removable lift handles.	200	POA
		300	POA
		400	POA
		500	POA
		600	POA
		700	POA
		800	POA
		900	POA
–RE	Acid Resistant Coated interior and exterior fabricated steel recessing receiver enclosed type for recessed installation. Furnished with adjustable support brackets and gasketed, non-skid, secured cover with movable lift handles.	200	POA
		300	POA
		400	POA
		500	POA
		600	POA
		700	POA
		800	POA
		900	POA

Size	Inlet/Outlet inch [mm]	Flow Rate gpm [LPM]	Capacity		Approximate Weight lb [kg]	Dimensions in inches [mm]			
			Water gallon [L]	Grease lb [kg]		C	D/E	F	G
200	2 [51]	7 [26]	5 [19]	14 [6]	56 [25]	11-1/4 [286]	8-1/8 [206]	21-3/4 [552]	11-7/8 [302]
300		10 [38]	6 [23]	20 [9]	70 [32]	11-3/4 [298]	8-1/4 [210]	25-1/8 [638]	14 [356]
400	3 [76]	15 [57]	10 [38]	30 [14]	87 [39]	13-3/8 [340]	9-3/8 [238]	27-1/8 [689]	16-3/4 [425]
500		20 [76]	16 [61]	40 [18]	104 [47]	15 [381]	11-3/4 [298]	30 [762]	17-1/4 [438]
600		25 [95]	21 [79]	50 [23]	129 [59]	17 [432]	12-1/2 [318]	32-1/4 [819]	19-7/8 [505]
700		35 [132]	30 [114]	70 [32]	156 [71]	18-3/4 [476]	14-1/4 [362]	34-1/8 [867]	22-1/2 [572]
800		50 [189]	40 [151]	100 [45]	186 [84]	21-1/2 [546]	16 [406]	36 [914]	24-1/2 [622]
900		75 [284]	65 [246]	150 [68]	316 [143]	22-3/4 [578]	18-1/2 [470]		28-5/8 [727]

For additional product information, please visit www.zurn.ca

**Regularly furnished unless otherwise specified.*

Z1174 GREASE EATING BACTERIA DOSING UNIT AND SOLIDS INTERCEPTOR COMBINATION

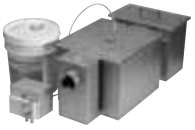

ZS1174 Shown. Z is Standard.

ENGINEERING SPECIFICATION

Zurn Z1174 grease interceptor with automatic bacteria dosing unit features acid resistant coated interior and exterior fabricated steel exterior, rated at _____ gpm and _____ lb grease capacity, internal air relief bypass, bronze cleanout plug, and visible double wall trap seal with removable pressure equalizing/flow-diffusing inlet baffle and fixed bottom outlet baffle. Gasketed, non-skid, secured cover comes complete with center tie down assembly and Z1108 flow control fitting. Furnished with Z1183 ARC solids interceptor, 110 VAC pump, pump mounting hardware, 15 feet of poly tubing and 5 gallons of grease-eating bacteria. Regularly furnished with inlet and outlet in high position.

NOTES

Location of outlet from bottom for interceptor cannot be changed.

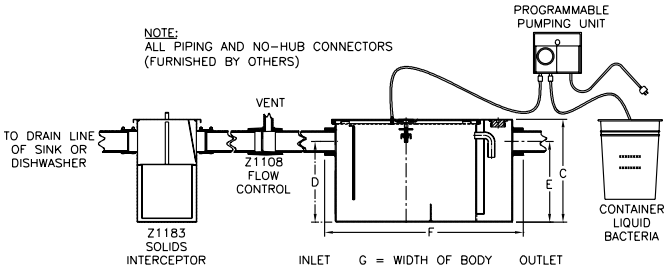

PREFIXES	DESCRIPTION	SIZE	LIST PRICE
Z1174*	Acid Resistant Coated Fabricated Steel	100	10,395.00
		200	10,907.00
		300	11,532.00
		400	11,885.00
		500	13,052.00
		600	14,669.00
		700	16,329.00
		800	17,389.00
ZS1174	All Type 304 Fabricated Stainless Steel	100	POA
		200	POA
		300	POA
		400	POA
		500	POA
		600	POA
		700	POA
		800	POA

SUFFIXES	DESCRIPTION	ADD
–CS	Custom screens (for Z1183) Specify material and perforation size required.	POA
–LS	Less Solids Interceptor	POA
–P	Pump only, 110 VAC	2,562.00
–PW	Plug Wrench	132.00
–RK	Retrofit kit, pump and bacteria (5-gal.) only	4,788.00
–YR	Replacement stainless steel basket assembly	POA
–1	One-gallon grease eating bacteria only	105.00
–5	Five-gallon grease eating bacteria only	1,750.00

Size	Inlet/Outlet inch [mm]	Flow Rate gpm [LPM]	Capacity		Approximate Weight lb [kg]	Dimensions in inches [mm]			
			Water gallon [L]	Grease lb [kg]		C	D/E	F	G
100	2 [51]	4 [15]	3 [11]	8 [4]	60 [27]	10 [254]	7-1/4 [184]	20-3/8 [518]	9-7/8 [251]
200		7 [26]	5 [19]	14 [6]	76 [34]	11-1/4 [286]	8-1/8 [206]	21-3/4 [552]	11-7/8 [302]
300	3 [76]	10 [38]	6 [23]	20 [9]	93 [42]	11-3/4 [298]	8-1/4 [210]	25-1/8 [638]	14 [356]
400		15 [57]	10 [38]	30 [14]	116 [53]	13-3/8 [340]	9-3/8 [238]	27-1/8 [689]	16-3/4 [425]
500		20 [76]	16 [61]	40 [18]	136 [62]	15 [381]	11-3/4 [298]	30 [762]	17-1/4 [438]
600		25 [95]	21 [79]	50 [23]	169 [77]	17 [432]	12-1/2 [318]	32-1/4 [819]	19-7/8 [505]
700		35 [132]	30 [114]	70 [32]	209 [95]	18-3/4 [476]	14-1/4 [362]	34-1/8 [867]	22-1/2 [572]
800		50 [189]	40 [151]	100 [45]	239 [108]	21-1/2 [546]	16 [406]	36 [914]	24-1/2 [622]

*Regularly furnished unless otherwise specified.

For additional product information, please visit www.zurn.ca

SOLIDS INTERCEPTORS – GENERAL PRODUCT INFORMATION

Zurn solids interceptors are specifically designed to capture and retain solid particles for a variety of different drain line applications. Units are available in Dura-Coated cast iron, bronze, Acid Resistant Coated steel and stainless steel, along with a multitude of screens designed for each application. If you require a solids interceptor not listed, phone 855-ONE-ZURN, or contact your local Zurn sales representative. Special screens and sizes are available to meet almost any need.

SOLIDS INTERCEPTORS – APPLICATION INDEX

Product selection should be made with a specific application and the type of construction in mind. The varied types and sizes of Zurn interceptors, along with their options, offer a selection for all applications.

APPLICATION	RECOMMENDED INTERCEPTOR
Food Preparation	Z1181, Z1182, Z1183, Z1183-DF, Z1183-FC
Hair Salons	Z1175, Z1176, Z1180, Z1184
Plaster	Z1180, Z1181
Barium	Z1180
Fish Scales	Z1181, Z1183, Z1183-FC, Z1185
Garbage Disposal	Z1181, Z1182, Z1183, Z1183-DF, Z1183-FC
Laundry, Clothes Washers	Z1185
With Z1170 and Z1173 Interceptors	Z1181, Z1182, Z1183, Z1183-DF, Z1183-FC

SOLIDS INTERCEPTORS – SIZING

All Zurn solids interceptors are designed for gravity flow where minimal head is expected. Zurn solids interceptors are designed to accommodate the flow rate of their inlet and outlet pipe size, provided they are maintained and kept clean.

Zurn solids interceptors should be sized by both expected flow rate and holding capacity. Z1185 lint interceptors must, however, be sized for the number of washing machines which they serve. Sizing for the Z1181 solids interceptor should be sized by the number and size of the sinks being served as is the case with the Z1170 grease interceptor.

Fixture Compartment Size (Inches)	Number of Compartments	Drainage Load (Gallons)	Recommended Size Solids interceptors	
			One-minute Drainage Period	Two-minute Drainage Period
18 x 12 x 6	1	4.2	7	4
16 x 14 x 8	1	5.8	7	4
20 x 18 x 8	1	9.4	10	7
18 x 16 x 8	2	15.0	15	10
20 x 18 x 8	2	18.7	20	10
30 x 20 x 8	1	15.5	20	10
24 x 20 x 12	1	18.7	20	10
22 x 20 x 8	2	23.0	25	15
22 x 20 x 12	2	34.0	35	20
24 x 24 x 12	2	44.9	50	25

Z1175 HAIR INTERCEPTOR

ENGINEERING SPECIFICATION

Zurn Z1175 Dura-Coated cast iron hair and solids interceptor, in lieu of fixture "P" trap, with 1-1/2" [38 mm] slip joint elbow inlet and 1-1/2" [38 mm] threaded side outlet, perforated stainless steel basket, removable from bottom, with flanged and gasketed, slotted cleanout cover with raised head. Perforation size is 1/8" [3 mm].

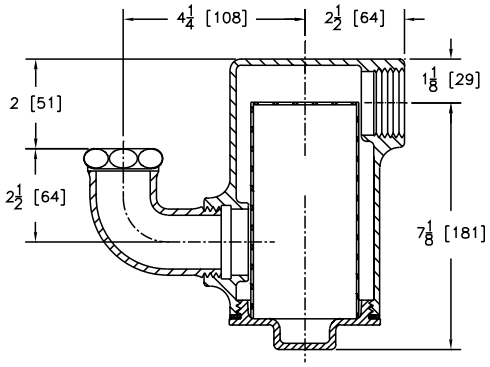

Inlet/Outlet inch [mm]	Approximate Weight lb [kg]
1-1/2 [38]	8 [4]

PREFIXES	DESCRIPTION	LIST PRICE
Z1175*	Standard Assembly (See Engineering Specification)	1,033.00
ZAB1175	All Satin Finish	1,897.00
SUFFIXES	**DESCRIPTION**	**ADD**
–CP	Chrome Plated Finish Interior and Exterior (ZAB Only)	640.00
–YR	Replacement Stainless Steel Basket	-

Z1176 HAIR INTERCEPTOR

ENGINEERING SPECIFICATION

Zurn Z1176 hair and solids interceptor works in lieu of fixture "P" trap. Features Dura-Coated cast iron construction, 1-1/2" [38 mm] slip joint elbow inlet and 1-1/2" [38 mm] threaded swivel elbow top outlet, perforated stainless steel basket, removable from bottom, and flanged and gasketed cleanout cover with raised head. Perforation size is 1/8" [3 mm].

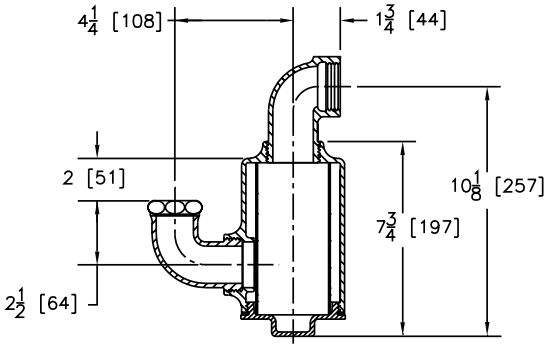

Inlet/Outlet inch [mm]	Approximate Weight lb [kg]
1-1/2 [38]	8 [4]

PREFIXES	DESCRIPTION	LIST PRICE
Z1176*	Standard Assembly (See Engineering Specification)	1,155.00
ZAB1176	All Satin Finish	2,119.00
SUFFIXES	**DESCRIPTION**	**ADD**
–CP	Chrome Plated Finish Interior and Exterior (ZAB Only)	712.00
–YR	Replacement Stainless Steel Basket	410.00

Regularly furnished unless otherwise specified.

For additional product information, please visit www.zurn.ca

Z1180 SOLIDS INTERCEPTOR

ENGINEERING SPECIFICATION

Zurn Z1180 solids interceptor works in lieu of fixture "P" trap. Features acid resistant composite, on-floor installation, removable PVC sediment bucket with a removable 3/32" [2 mm] diameter perforated flow defusing/intercepting PVC screen, top access, gasketed, secured cover, stainless steel draw latches and hardware with an ABS handle for easy removal of sediment bucket and screen.

NOTES

†Regularly furnished with 2" [51 mm] threaded low inlet and high outlet.

CAUTION

Interceptors must be maintained periodically in order to ensure proper operation of the system. Follow cleaning schedule based on usage.

Inlet/Outlet inch [mm]	Flow Rate gpm [LPM]	Approximate Weight lb [kg]
1-1/2 [38], 2 [51]†	15 [57]	6 [3]

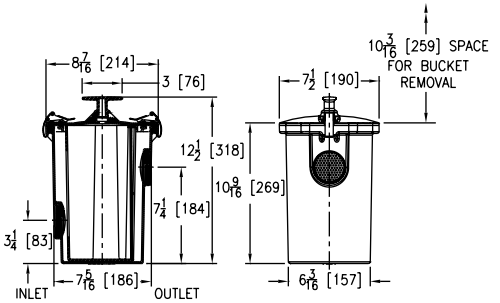

PREFIXES	DESCRIPTION	LIST PRICE
Z1180*	Standard Assembly (See Engineering Specification)	1,246.00
ZA1180	Acid Resistant Coated Fabricated Steel (Design different than what is shown.)	2,051.00
SUFFIXES	**DESCRIPTION**	**ADD**
–CS	Custom Screens (Specify material and perforation size required.)	POA
–RS	Replacement 3/32" Diameter Perforated Screen for Bucket	260.00
–SS	Stainless Steel 3/32" Diameter Perforated Screen for Bucket	351.00
–Y	Replacement Bucket Assembly with 3/32" Diameter Perforated Screen	823.00

Z1181 SOLIDS INTERCEPTOR

ENGINEERING SPECIFICATION

Zurn Z1181 solids interceptor features large capacity, acid resistant coated interior and fabricated steel exterior. Works in lieu of fixture "P" trap for on-floor or flush with floor installation. Furnished with a removable, acid resistant coated fabricated steel bucket with removable primary (3/8" [10 mm] diameter holes) and secondary (3/32" [2 mm] diameter holes) flow diffusing/intercepting brass screens, and complete with a top access, gasketed, secured cover.

NOTES

†Regularly furnished with 2" [51 mm] threaded low inlet and high outlet.

CAUTION

Interceptors must be maintained periodically in order to ensure proper operation of the system. Follow cleaning schedule based on usage.

A Inlet/Outlet inch [mm]	B	Flow Rate gpm [LPM]	Approximate Weight lb [kg]
1-1/2 [38], 2 [51]†	13-1/2 [343]	30 [114]	40 [18]
3 [76]	13 [330]		

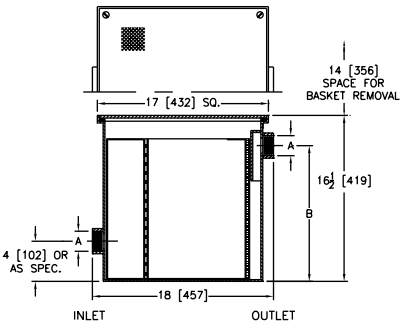

PREFIXES	DESCRIPTION	A INLET/OUTLET	LIST PRICE
Z1181*	Standard Assembly (See Engineering Specification)	1-1/2", 2"	4,254.00
		3"	5,500.00
SUFFIXES	**DESCRIPTION**	**A INLET/OUTLET**	**ADD**
–CS	Custom Screens (Specify material and perforation size required.)		POA
–R	Acid Resistant Coated Interior and Exterior Fabricated Steel Recessing Receiver for Recessed Installation is Equipped with Adjustable Support Brackets and Gasketed, Non-Skid, secured cover with removable Lift Handle		7,445.00
–SS	Stainless Steel Perforated Screens for Bucket (Specify perforation size.)	1-1/2", 2"	796.00
		3"	998.00
–Y	Replacement Bucket Assembly with Perforated Screens	1-1/2", 2"	15,658.00
		3"	2,620.00

Z1182 SIDE ACCESS SOLIDS INTERCEPTOR

ENGINEERING SPECIFICATION

Zurn Z1182 side access solids interceptor features stainless steel construction. Ideal for suspended or under sink installations where there are height restrictions for a top removal solids interceptor. Furnished with removable sediment basket attached to a removable, gasketed, latched lid. All units have a high inlet and a low outlet on each side for right- or left-hand mounting.

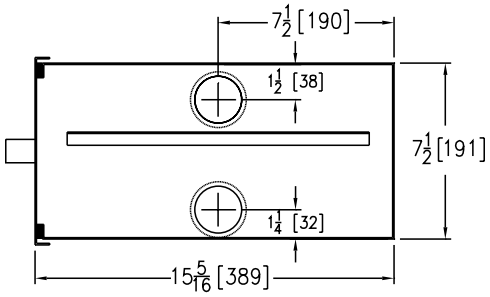

WIDTH = 11½ [292]

PREFIXES	DESCRIPTION	LIST PRICE
ZS1182*	All Type 304 Fabricated Stainless Steel	7,825.00
SUFFIXES	**DESCRIPTION**	**ADD**
–YR	Replacement Stainless Steel Basket Assembly	3,558.00

Inlet/Outlet inch [mm]	Flow Rate gpm [LPM]
2 [51]	35 [132]

Z1183 SOLIDS INTERCEPTOR

ENGINEERING SPECIFICATION

Zurn Z1183 solids interceptor features large capacity, acid resistant coated fabricated steel or stainless steel construction. Ideal for on floor or semi-recessed installation cores with screen attached to gasketed, removable, latched lid and removable sediment basket. Size to be used with corresponding Z1170, Z1172, or Z1173 grease interceptors.

CAUTION

Interceptors must be maintained periodically in order to ensure proper operation of the system. Follow cleaning schedule based on usage.

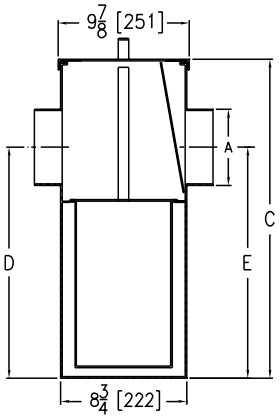

INLET G=WIDTH OF BODY OUTLET

PREFIXES	DESCRIPTION	SIZE	LIST PRICE
Z1183*	Acid Resistant Coated Fabricated Steel	100	4,455.00
		200	7,320.00
		300	4,641.00
		400	4,894.00
		500	5,126.00
		600	6,763.00
		700	7,548.00
		800	8,113.00
		900	8,530.00
ZS1183	All Type 304 Fabricated Stainless Steel	100	8,061.00
		200	8,879.00
		300	9,433.00
		400	9,618.00
		500	10,225.00
		600	9,545.00
		700	12,759.00
		800	13,687.00
		900	16,755.00
SUFFIXES	**DESCRIPTION**		**ADD**
–CS	Custom Screens (Specify material and perforation size required.)		POA
–YR	Replacement Stainless Steel Basket Assembly		POA

Size	Inlet/ Outlet inch [mm]	Flow Rate gpm [LPM]	Solid Capacity cu ft [cm3]	Dimensions in inches [mm]			Approximate Weight lb [kg]
				C	D/E	G	
100	2 [51]	4 [15]	0.20 [.006]	10 [254]	7-1/4 [184]	9-7/8 [251]	18 [8]
200		7 [26]	0.29 [.008]	11-1/8 [283]	8-1/8 [206]	11-7/8 [302]	23 [10]
300	3 [76]	10 [38]	0.33 [.009]	11-3/4 [298]	8-1/4 [210]	14 [356]	27 [12]
400		15 [57]	0.38 [.011]	13-3/8 [340]	9-3/8 [238]	16-3/4 [425]	33 [15]
500		20 [76]	0.66 [.019]	15 [381]	11-3/4 [298]	17-1/4 [438]	37 [17]
600	4 [102]	25 [95]	0.79 [.022]	17 [432]	12-7/16 [316]	19-7/8 [506]	45 [20]
700		35 [132]	1.17 [.033]	18-3/4 [476]	14-3/16 [360]	22-1/2 [572]	53 [24]
800		50 [189]	1.35 [.038]	21-1/2 [546]	16 [406]		59 [27]
900		75 [284]	1.61 [.046]	22-3/4 [578]	18-1/2 [470]		63 [29]

Regularly furnished unless otherwise specified.

For additional product information, please visit www.zurn.ca

Z1183-DF SOLIDS INTERCEPTOR WITH DISPOSABLE FILTER BAGS

ENGINEERING SPECIFICATION

Zurn Z1183-DF solids interceptor features acid resistant coated fabricated steel or stainless steel. Ideal for on floor or semi-recessed installation with replaceable filter bags, retainer plate, latched lid, and removable sediment basket. Size to be used with corresponding Z1170 grease interceptor.

CAUTION

Interceptors must be maintained periodically in order to ensure proper operation of the system. Follow cleaning schedule based on usage.

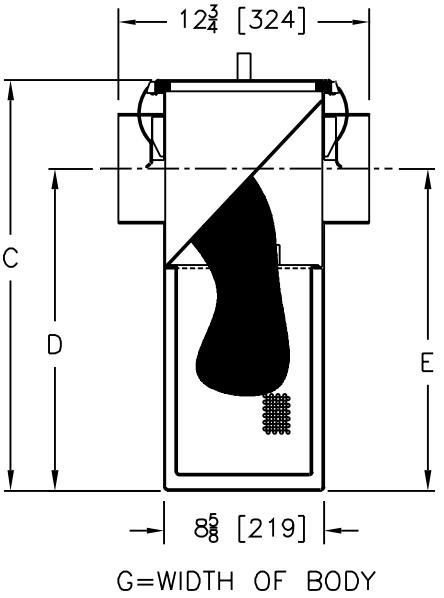

PREFIXES	DESCRIPTION	SIZE	LIST PRICE
Z1183-DF*	Acid Resistant Coated Fabricated Steel	100	5,203.00
		200	5,729.00
		300	6,088.00
		400	6,208.00
		500	6,597.00
		600	7,369.00
		700	8,235.00
		800	8,832.00
		900	10,810.00
ZS1183-DF	All Type 304 Fabricated Stainless Steel	100	POA
		200	POA
		300	POA
		400	POA
		500	POA
		600	POA
		700	POA
		800	POA
		900	POA
SUFFIXES	**DESCRIPTION**	**SIZE**	**ADD**
–XB	Extra Solids Interceptor Basket		794.00
–XF	Extra Supply of 30 Solids Filter Bags		794.00

Size	Inlet/Outlet inch [mm]	Flow Rate gpm [LPM]	Solid Capacity cu ft [cm3]	Dimensions in inches [mm]		
				C	D/E	G
100	2 [51]	4 [15]	0.20 [.006]	10 [254]	7-1/4 [184]	9-7/8 [251]
200		7 [26]	0.29 [.008]	11-1/8 [283]	8-1/8 [206]	11-7/8 [302]
300	3 [76]	10 [38]	0.33 [.009]	11-3/4 [298]	8-1/4 [210]	14 [356]
400		15 [57]	0.38 [.011]	13-3/8 [340]	9-3/8 [238]	16-3/4 [425]
500		20 [76]	0.66 [.019]	15 [381]	11-3/4 [298]	17-1/4 [438]
600	4 [102]	25 [95]	0.79 [.022]	17 [432]	12-7/16 [316]	19-7/8 [505]
700		35 [132]	1.17 [.033]	18-3/4 [476]	14-3/16 [360]	22-1/2 [572]
800		50 [189]	1.35 [.038]	21-1/2 [546]	16 [406]	
900		75 [284]	1.61 [.046]	22-3/4 [578]	18-1/2 [470]	

For additional product information, please visit www.zurn.ca

**Regularly furnished unless otherwise specified.*

Z1183-FC SOLIDS INTERCEPTOR WITH FLUSH COVER

ENGINEERING SPECIFICATION

Zurn Z1183-FC solids interceptor features large capacity, acid resistant coated interior and exterior fabricated steel or stainless steel solids. Ideal for recessed installation with screen attached to gasketed, non-skid secured cover with removable lift handle and removable sediment basket. Size to be used with corresponding Z1170, Z1172, or Z1173 grease interceptors.

CAUTION

Interceptors must be maintained periodically in order to ensure proper operation of the system. Follow cleaning schedule based on usage.

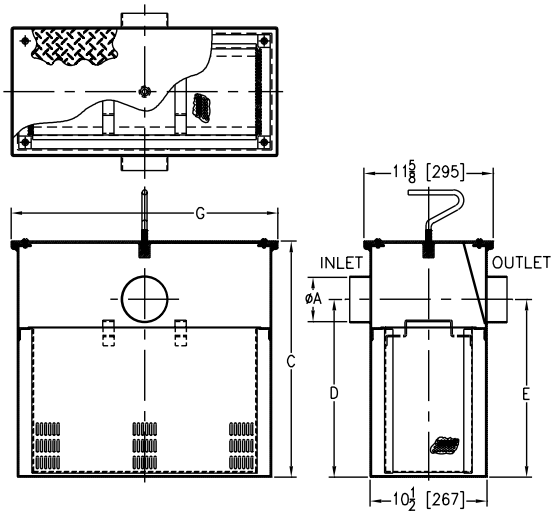

PREFIXES	DESCRIPTION	SIZE	LIST PRICE
Z1183-FC*	Acid Resistant Coated Fabricated Steel	100	3,027.00
		200	3,079.00
		300	3,122.00
		400	5,894.00
		500	6,575.00
		600	7,881.00
		700	8,263.00
		800	8,863.00
		900	9,372.00
		1000	12,308.00
		1100	16,079.00
		1200	18,324.00
ZS1183-FC	Type 304 Fabricated Stainless Steel	100	POA
		200	POA
		300	POA
		400	POA
		500	POA
		600	POA
		700	POA
		800	POA
		900	POA
		1000	POA
		1100	POA
		1200	POA

SUFFIXES	DESCRIPTION	ADD
–CS	Custom Screens (Specify material and perforation size required.)	POA
–E	Acid Resistant Coated Interior and Exterior Fabricated Steel Extension Section	POA
–YR	Replacement Stainless Steel Bucket Assembly	POA

Size	Inlet/Outlet inch [mm]	Flow Rate gpm [LPM]	Solid Capacity cu ft [cm3]	Dimensions in inches [mm]		
				C	D/E	G
100	2 [51]	4 [15]	0.20 [.006]	10 [254]	7-1/4 [184]	11-3/4 [298]
200		7 [26]	0.29 [.008]	11-1/8 [283]	8-1/8 [206]	13-3/4 [349]
300		10 [38]	0.33 [.009]	11-3/4 [298]	8-1/4 [210]	15-7/8 [403]
400	3 [76]	15 [57]	0.38 [.011]	13-3/8 [340]	9-3/8 [238]	18-5/8 [473]
500		20 [76]	0.66 [.019]	15 [381]	11-3/4 [298]	19-1/8 [486]
600		25 [95]	0.79 [.022]	17 [432]	12-7/16 [316]	21-3/4 [552]
700		35 [132]	1.17 [.033]	18-3/4 [476]	14-3/16 [360]	24-3/8 [619]
800		50 [189]	1.35 [.038]	21-1/8 [537]	16 [406]	
900		75 [284]	1.61 [.046]	22-3/4 [578]	18-1/2 [470]	
1000		100 [379]	1.80 [.051]	27 [686]	23 [584]	
1100		125 [473]	1.95 [.055]	30-1/8 [765]	24-1/2 [622]	
1200	4 [102]	150 [568]	2.11 [.060]	30-3/4 [781]	25-1/2 [648]	

Regularly furnished unless otherwise specified.

For additional product information, please visit www.zurn.ca

Z1184 BOTTOM ACCESS SOLIDS INTERCEPTOR

ENGINEERING SPECIFICATION

Zurn Z1184 bottom access solids interceptor features acid resistant composite. Works in lieu of fixture "P" trap for suspended installation. Includes removable PVC sediment bucket with a removable 3/32" [2 mm] diameter perforated flow defusing/intercepting PVC screen, designed to intercept all types of solids and precious metals. Bottom access gasketed, secured cover comes complete with stainless steel draw latches and hardware with an ABS combination handle and drain port plug for easy removal of sediment bucket and screen.

NOTES

†Regularly furnished with 2" [51 mm] threaded low inlet and high outlet.

CAUTION

Interceptors must be maintained periodically in order to ensure proper operation of the system. Follow cleaning schedule based on usage.

Inlet/Outlet inch [mm]	Flow Rate gpm [LPM]	Approximate Weight lb [kg]
1-1/2 [38], 2 [51]†	15 [57]	6 [3]

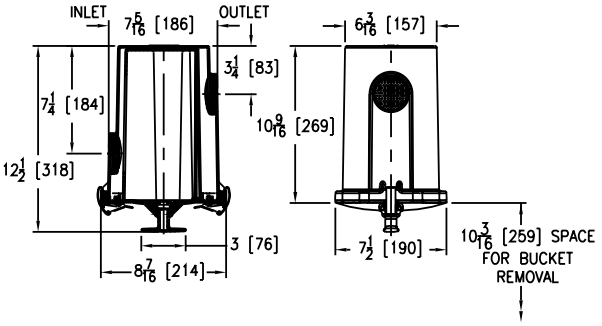

PREFIXES	DESCRIPTION	LIST PRICE
Z1184*	Standard Assembly (See Engineering Specification)	1,246.00
ZA1184	Acid Resistant Coated Fabricated Steel (Design different than what is shown.)	2,051.00
SUFFIXES	**DESCRIPTION**	**ADD**
–CS	Chrome Plated Finish Interior and Exterior (ZAB Only)	POA
–RS	Replacement 3/32" Diameter Perforated Screen for Bucket	260.00
–SS	Stainless Steel 3/32" Diameter Perforated Screen for Bucket	351.00
–Y	Replacement Bucket Assembly with 3/32" Diameter Perforated Screen	823.00

For additional product information, please visit www.zurn.ca

**Regularly furnished unless otherwise specified.*

Z1185 LINT INTERCEPTOR

ENGINEERING SPECIFICATION

Zurn Z1185 lint interceptor features acid resistant coated interior and fabricated steel exterior, non-skid secured cover with removable lift handle, lint intercepting secondary screen assembly with 3/32" [2 mm] square openings, and permanent primary straining baffle with 3/8" [10 mm] diameter perforated holes. Regularly furnished with high inlet and low outlet.

NOTES

Size #3 and #7 covers are not furnished with a lift handle.

CAUTION

Interceptors must be maintained periodically in order to ensure proper operation of the system. Follow cleaning schedule based on usage.

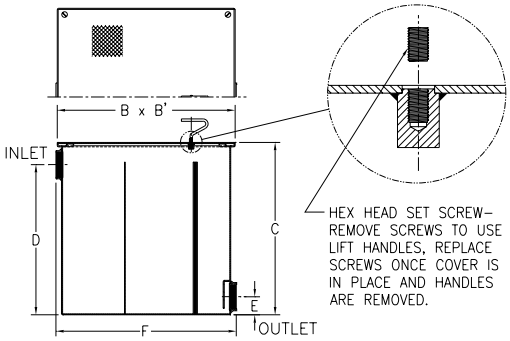

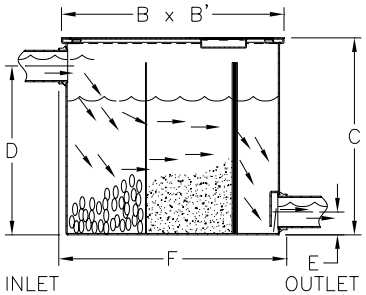

PREFIXES	DESCRIPTION	SIZE	LIST PRICE
Z1185*	Acid Resistant Coated Fabricated Steel	3	11,120.00
		7	13,079.00
		10	15,125.00
		20	18,685.00
		30	21,709.00
		40	24,911.00
		50	27,933.00
ZS1185	All Type 304 Fabricated Stainless Steel	3	POA
		7	POA
		10	POA
		20	POA
		30	POA
		40	POA
		50	POA

SUFFIXES	DESCRIPTION	SIZE	ADD EA. ADDITIONAL 1" OVER 6"	ADD UP TO 6"
–E	Acid Resistant Coated Interior and Exterior Fabricated Steel Extension Section (Specify 'C' dimension required for recessed installation.)	3	POA	POA
		7	POA	POA
		10	POA	POA
		20	POA	POA
		30	POA	POA
		40	POA	POA
		50	POA	POA

		SIZE	ADD
–RS	Replacement Screen Assembly	3	893.00
		7	1,158.00
		10	1,693.00
		20	2,139.00
		30	2,491.00
		40	2,585.00
		50	2,849.00

Size No. of Machines	Inlet/Outlet inch [mm]	Flow Rate gpm [LPM]	Approximate Weight lb [kg]	Dimensions in inches [mm]				
				B	C	D	E	F
3	2 [51]	30 [114]	93 [42]	17 [432]	16-1/2 [419]	13-1/2 [343]	3-1/4 [83]	17-1/4 [438]
7	3 [76]	70 [265]	155 [70]	25 [635]	20 [508]	15-3/4 [400]		25-1/2 [648]
10	4 [102]	100 [379]	271 [123]	33 [838]	28 [711]	25 [635]	4 [102]	34 [864]
20		200 [757]	404 [183]	40 [1016]	35 [889]	32 [813]		41 [1041]
30	6 [152]	300 [1136]	654 [267]	45 [1143]	40 [1016]	36 [914]	5 [127]	46 [1168]
40		400 [1514]	723 [328]	48 [1219]	43 [1092]	39 [991]		49 [1245]
50		500 [1893]	911 [413]	52 [1321]	47 [1194]	43 [1092]		53 [1346]

Regularly furnished unless otherwise specified.

For additional product information, please visit www.zurn.ca

OIL INTERCEPTORS – GENERAL PRODUCT INFORMATION

Zurn oil interceptors are designed to be similar to the grease interceptors. Both work on the principle that oils are lighter than water and thus gravity causes the oil to rise and the solids to fall. Zurn oil interceptors come equipped with a removable sediment bucket on the inlet to trap stones, grit and other substances. Their perforated, flow-diffusing baffle eliminates turbulence and allows for high efficiency of separation.

All Zurn Z1186 and Z1188 oil interceptors are supplied with a specific gravity oil draw-off tube assembly. This assembly is to be set 1/8 above the static water level, per standard installation instructions. Once oil builds down to this level, the oil draws off by gravity through the tube assembly.

All Zurn oil interceptors are of 100% steel construction coated with a blue acid resisting epoxy. All Zurn oil interceptors are listed by the IAPMO. If you require an oil interceptor not listed phone 855-ONE-ZURN, or contact your local Zurn sales representative.

OIL INTERCEPTORS – APPLICATION INDEX

Product selection should be made with a specific application and the type of construction in mind. The varied types and sizes of Zurn interceptors, along with their options, offer a selection for all applications.

APPLICATION	RECOMMENDED INTERCEPTOR
Maintenance, Parking Garage, Oil Spill Areas	Z1186, Z1186-ST, Z1187, Z1187-SI, Z1188, Z1188-ST, Z1189, Z1196, Z1198, Z1198-ST
Municipal Water Systems, Wells	Z1187
Electronic Oil Level Sensors	Z1194, Z1196, Z1198, Z1198-ST

Z1186 OIL INTERCEPTOR

ENGINEERING SPECIFICATION

Zurn Z1186 oil interceptor features acid resistant coated interior and fabricated steel exterior, bronze cleanout plug and visible double wall trap seal, removable combination pressure equalizing/ flow-diffusing baffle and sediment bucket, horizontal baffle, adjustable oil draw-off, and vent connections (either side). Gasketed, non-skid, secured cover comes complete with flow control fitting. Regularly furnished with inlet and outlet in high position.

NOTES

Location of outlet from bottom of interceptor cannot be changed.
†Inlet and outlet sizes shown indicate standard operating sizes and flow control settings. Size #300 and #400 will have 3" [76 mm] connections reduced to 2" [51 mm] as standard. Size #700 and #800 will have 4" [102 mm] connections reduced to 3" [76 mm] as standard.

CAUTION

Interceptors must be maintained periodically in order to ensure proper operation of the system. Follow cleaning schedule based on usage.

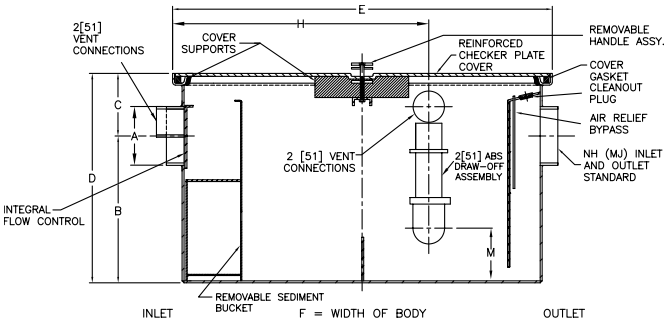

PREFIXES	DESCRIPTION	SIZE	LIST PRICE
Z1186*	Dura-Coated Coated Fabricated Steel	300	4,185.00
		400	4,358.00
		500	4,763.00
		600	5,680.00
		700	6,501.00
		800	7,149.00
ZS1186	All Type 304 Fabricated Stainless Steel	300	16,390.00
		400	16,940.00
		500	19,140.00
		600	23,980.00
		700	26,840.00
		800	30,140.00
ZSS1186	All Type 304 Dura-Coated Fabricated Stainless Steel	300	19,250.00
		400	19,910.00
		500	22,220.00
		600	27,500.00
		700	30,250.00
		800	36,850.00

SUFFIXES	DESCRIPTION	SIZE	EA. ADDITIONAL 1" [25MM] OVER 6" [152MM]	UP TO 6" [152MM]
–E	Acid Resistant Coated Interior and Exterior Fabricated Steel Extension Section. (Specify 'C' dimension required for recessed installation.)	300	98.00	1,209.00
		400	98.00	1,209.00
		500	98.00	1,273.00
		600	98.00	1,273.00
		700	98.00	1,317.00
		800	98.00	1,317.00
		SIZE		ADD
–HD	Heavy duty traffic cover rated at 10,000 lb maximum safe live load. A 3" [76 mm] minimum extension height is required when Heavy Duty Cover (-HD) option is specified. (Specify 'C' dimension height required.)	300		2,408.00
		400		2,673.00
		500		2,934.00
		600		3,116.00
		700		3,207.00
		800		3,207.00
–HT	Oil Interceptor Holding Tank with Cleanout	300		5,076.00
		400		5,076.00
		500		5,518.00
		600		5,518.00
		700		5,876.00
		800		5,876.00
–K	Anchor flange 1-3/4" [44 mm] down from top and 2" [51 mm] wide. A 3" [76 mm] minimum extension height is required when anchor flange (–K) option is specified. (Specify 'C' dimension height required.) Price for –E plus –K.	300		1,423.00
		400		1,423.00
		500		1,423.00
		600		1,423.00
		700		1,423.00
		800		1,423.00
–KC	Anchor flange 1-3/4" [44 mm] down from top and 2" [51 mm] wide with clamp collar. A 3" [76 mm] minimum extension height is required when anchor flange (–KC) option is specified.	300		1,535.00
		400		1,535.00
		500		1,535.00
		600		1,535.00
		700		1,535.00
		800		1,535.00

Size	Inlet/ Outlet† inch [mm]	Flow Rate gpm [LPM]	Approximate Weight lb [kg]	Dimensions in inches [mm]						
				B	C	D	E	F	H	M
300	2 [51]	10 [38]	76 [34]	7-1/2 [191]	6 [152]	13-1/2 [343]	20-1/4 [514]	16-1/4 [413]	11-5/8 [295]	3-1/4 [83]
400	3 [76]	15 [57]								
500		20 [76]	89 [40]	11-1/2 [292]		17-1/2 [445]			13-1/4 [337]	5-1/8 [131]
600	4 [102]	25 [95]	110 [50]	13-1/2 [343]		19-1/2 [495]		19-1/4 [489]	16 [406]	4-3/4 [121]
700		35 [132]	117 [53]	15-1/2 [394]		21-1/2 [546]			16-3/8 [416]	3-5/8 [92]
800		50 [189]	172 [78]	13-1/2 [343]		19-1/2 [495]	32-1/4 [819]	24-1/4 [616]	17-1/4 [438]	

*Regularly furnished unless otherwise specified.

Z1186-ST OIL INTERCEPTOR WITH INTEGRAL STORAGE TANK

ENGINEERING SPECIFICATION

Zurn Z1186-ST oil interceptor features acid resistant coated interior and fabricated steel exterior, bronze cleanout plug and visible double wall trap seal, removable combination pressure equalizing/flow-diffusing baffle and sediment bucket, oil draw-off, and vent connections. Secured, gasketed, non-skid cover comes complete with flow control fitting and left-hand integral storage tank. Regularly furnished with inlet and outlet in high position.

NOTES

Location of outlet from bottom of interceptor cannot be changed. Regularly furnished with left-hand side storage tank.
†Inlet and outlet sizes shown indicate standard operating sizes and flow control settings. Size #300 and #400 will have 3″ [76 mm] connections reduced to 2″ [51 mm] as standard. Size #700 and #800 will have 4″ [102 mm] connections reduced to 3″ [76 mm] as standard.

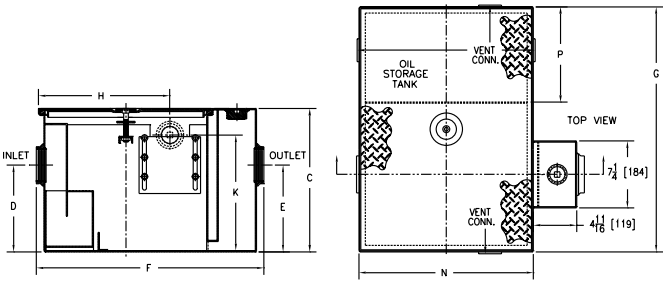

PREFIXES	DESCRIPTION	SIZE	LIST PRICE
Z1186-ST*	Acid Resistant Coated Fabricated Steel	300	8,314.00
		400	11,407.00
		500	13,793.00
		600	14,973.00
		700	18,174.00
		800	24,490.00

SUFFIXES	DESCRIPTION	SIZE	ADD EA. ADDITIONAL 1″ OVER 6″	ADD UP TO 6″
–E	Acid Resistant Coated interior and exterior fabricated steel section. (Specify 'C' dimension required for recessed installation.)	300	193.00	1,158.00
		400	193.00	1,158.00
		500	193.00	1,158.00
		600	193.00	1,158.00
		700	193.00	1,158.00
		800	193.00	1,158.00
		SIZE		ADD
–HD	Heavy duty traffic cover rated at 10,000 lb maximum safe live load. A 3″ [76] minimum extension height is required when anchor flange (-K) option is specified. (Specify 'C' Dim. height required.)	300		9,396.00
		400		9,980.00
		500		10,570.00
		600		11,153.00
		700		11,857.00
		800		11,924.00
–K	Anchor flange 1-3/4″ down from top and 2″ wide. A 3″ minimum extension height is required when anchor flange (–K) option is specified. (Specify 'C' dimension height required.)	300		2,170.00
		400		2,170.00
		500		2,292.00
		600		2,395.00
		700		2,544.00
		800		2,544.00
–KC	Anchor flange 1-3/4″ down from top and 2″ wide with clamp collar. Same dimensional requirements as –K. Price for –E plus –KC.	300		2,544.00
		400		2,544.00
		500		2,544.00
		600		2,835.00
		700		2,934.00
		800		3,361.00
–PW	Plug Wrench			132.00
–STR	Storage tank on right-hand side when facing the inlet.			N/C

Size	Inlet/ Outlet† inch [mm]	Flow Rate gpm [LPM]	Water Capacity gallon [L]	Approximate Weight lb [kg]	Dimensions in inches [mm]						
					C	D/E	F	G	H	K	N
300	2 [51]	10 [38]	7 [26]	95 [43]	13-7/8 [352]	8-1/8 [206]	23-1/16 [586]	23-9/16 [598]	12-1/16 [306]	11 [279]	16-7/8 [429]
400		15 [57]	9 [34]	95 [43]	14 [356]	8-1/4 [210]					
500	3 [76]	20 [76]	10 [38]	115 [52]	15-1/2 [394]	9-3/8 [238]	25-1/16 [637]	26-1/2 [673]	14-3/16 [360]	12-1/2 [318]	18-7/8 [479]
600		25 [95]	16 [61]	280 [127]	18-1/4 [464]	11-3/4 [298]	35-7/32 [895]	50-7/8 [1292]	19-1/4 [489]	15-1/4 [387]	29 [737]
700		35 [132]	21 [79]	320 [145]	19-3/4 [502]	12-7/16 [316]	43-7/16 [1103]	45 [1143]	23-1/4 [591]	16-3/4 [425]	37 [940]
800		50 [189]	30 [114]	529 [240]	24-1/4 [616]	14-3/16 [360]	49-7/16 [1256]	70-1/8 [1781]	26-1/4 [667]	21-1/4 [540]	43 [1092]

For additional product information, please visit www.zurn.ca

**Regularly furnished unless otherwise specified.*

Z1187 SAND AND SEDIMENT INTERCEPTOR

ENGINEERING SPECIFICATION

Zurn Z1187 sand and sediment interceptor features acid resistant coated interior and fabricated steel exterior, _____ cu ft capacity below invert of outlet, 4" [102 mm] threaded inlet and outlet, and four 2" [51 mm] threaded individual vent connections complete with heavy-duty, scoriated, non-skid, removable covers.

PREFIXES	DESCRIPTION	SIZE	LIST PRICE
Z1187*	Acid Resistant Coated Fabricated Steel	300	30,754.00
		400	32,677.00
		500	34,598.00
		600	38,444.00
		700	42,288.00
		800	46,130.00
		1000	53,818.00

SUFFIXES	DESCRIPTION	SIZE	ADD EA. ADDITIONAL 1" OVER 6"	ADD UP TO 6"
–E	Integral extension assembly for recessed installation. (Specify overall height required.)	300	211.00	2,276.00
		400	211.00	2,276.00
		500	211.00	2,276.00
		600	352.00	2,276.00
		700	352.00	2,276.00
		800	561.00	2,449.00
		1000	561.00	2,449.00
		SIZE		ADD
–HD	Heavy-duty cover rated at 10,000 lb maximum safe live load.	300		16,344.00
		400		19,376.00
		500		25,420.00
		600		28,448.00
		700		31,240.00
		800		34,500.00
		1000		41,852.00
–K	Anchor flange 1-3/4" down from top and 2" wide. No extension required to accommodate –K option.	300		1,386.00
		400		1,386.00
		500		1,386.00
		600		1,386.00
		700		1,386.00
		800		1,386.00
		1000		1,386.00

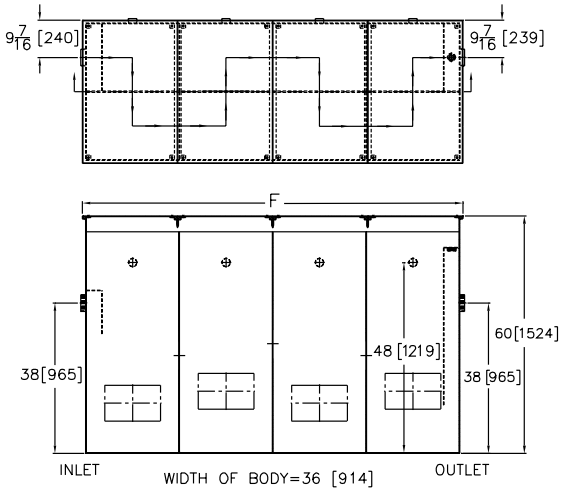

Size	cu ft [cm3]	Approximate Weight lb [kg]	F-Dim.
300	43 [1.2]	1600 [726]	60 [1524]
400	54 [1.5]	1750 [794]	72 [1829]
500	72 [2.0]	2100 [953]	96 [2438]
600	81 [2.3]	2500 [1134]	108 [2743]
700	90 [2.5]	2700 [1225]	120 [3048]
800	108 [3.0]	3000 [1361]	144 [3658]
1000	135 [3.8]	3640 [1651]	180 [4572]

Regularly furnished unless otherwise specified.

For additional product information, please visit www.zurn.ca

Z1187-SI SAND INTERCEPTOR

ENGINEERING SPECIFICATION

Zurn Z1187-SI sand interceptor features Dura-Coated interior and fabricated steel exterior with threaded inlet and outlet complete with removable, heavy-duty grates.

NOTES

1. Location of outlet from bottom of interceptor cannot be changed.
2. Standard grating is for heavy-duty applications. The -SC option is for a heavy-duty cover.

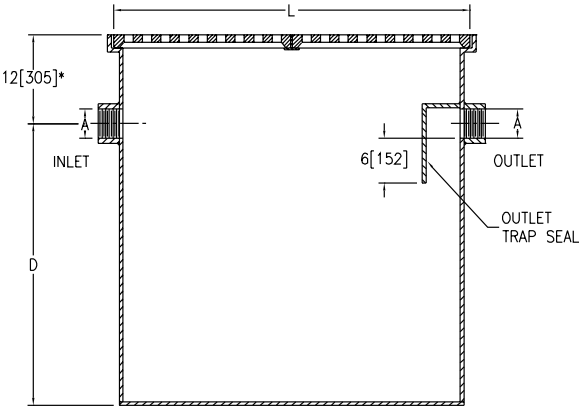

*12[305] REGULARLY FURNISHED–
SPECIFY DIMENSION IF HIGHER
OR LOWER IS REQUIRED

PREFIXES	DESCRIPTION	SIZE	LIST PRICE
Z1187-SI*	Dura-Coated Coated Fabricated Steel	20	19,591.00
		50	33,214.00
		150	92,010.00
		250	104,454.00
		500	134,405.00

SUFFIXES	DESCRIPTION	SIZE	EA. ADDITIONAL 1″ OVER 6″	UP TO 6″
–E	Integral extension assembly. (Specify extension height.)	20	135.00	1,188.00
		50	450.00	1,848.00
		150	450.00	3,302.00
		250	561.00	4,956.00
		500	831.00	8,423.00

		SIZE	ADD
–K	Anchor flange 1-3/4″ down from top and 2″ wide.	20	1,815.00
		50	2,310.00
		150	2,750.00
		250	3,245.00
		500	4,125.00
–KC	Anchor flange 1-3/4″ down from top and 2″ wide with clamp collar.	20	2,585.00
		50	3,080.00
		150	3,575.00
		250	4,015.00
		500	4,950.00
–NH	No-hub inlet and outlet (see Z1040)		N/C
–SC	Heavy-duty reinforced cover(s) rated at 10,000 lb maximum safe live load.	20	3,740.00
		50	7,476.00
		150	14,948.00
		250	22,450.00
		500	37,429.00
–VP	Vandal-proof screws		159.00

Size	Flow gpm [LPM] (Max.)	A Pipe Size inch [mm]	L inch [mm]	D inch [mm]	Capacity Gal. [L] (Static)	No. of 12″ x 24″ Grates	Width inch [mm]	Approximate Weight lb [kg]
20	20 [76]	4 [102]	24 [610]	26 [660]	60 [227]	2	24 [610]	133 [60]
50	50 [189]		48 [1219]		120 [454]	4		204 [93]
150	150 [568]			38 [965]	360 [1363]	8	48 [1219]	368 [167]
250	250 [946]	6 [152]	72 [1829]	39 [991]	540 [2044]	12		1294 [587]
500	500 [1893]		120 [3048]	51 [1295]	1200 [4542]	20		2204 [1000]

For additional product information, please visit www.zurn.ca

**Regularly furnished unless otherwise specified.*

Z1188 LARGE CAPACITY OIL INTERCEPTOR

ENGINEERING SPECIFICATION

Zurn Z1188 large capacity oil interceptor features a Dura-Coated interior and exterior fabricated steel oil interceptor, with internal air relief by-pass bronze cleanout plug and visible double wall trap seal, removable combination pressure equalizing/ flow diffusing baffle and sediment bucket, horizontal baffle, adjustable oil draw off and vent connections either side. Secured gasketed non-skid cover complete with integral flow control fitting.

CAUTION

Interceptors must be maintained periodically in order to ensure proper operation of the system. Follow cleaning schedule based on usage.

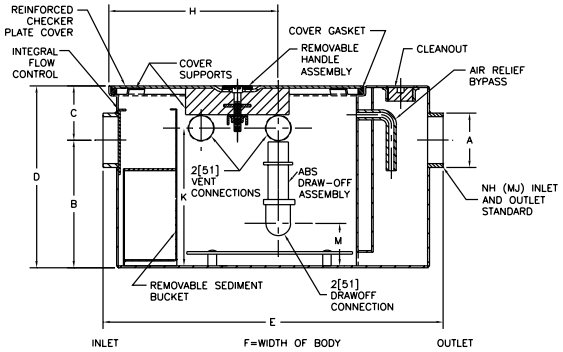

PREFIXES	DESCRIPTION	SIZE	LIST PRICE
Z1188*	Dura-Coated Coated Fabricated Steel	75	13,914.00
		100	16,513.00
		125	19,282.00
		150	21,137.00
		200	25,601.00
		250	29,120.00
		300	29,120.00
		350	31,896.00
		400	49,279.00
		450	60,586.00
		500	72,627.00

SUFFIXES	DESCRIPTION		ADD	
		SIZE	EA. ADDITIONAL 1" OVER 10"	UP TO 10"
–E	Acid Resistant Coated interior and exterior fabricated steel extension section. (Specify 'C' dimension required for recessed installation.)	75	110.00	1,602.00
		100	161.00	1,958.00
		125	161.00	1,958.00
		150	161.00	1,958.00
		200	161.00	2,139.00
		250	161.00	2,317.00
		300	161.00	2,317.00
		350	161.00	2,317.00
		400	161.00	2,317.00
		450	161.00	2,317.00
		500	161.00	2,317.00

SUFFIXES	DESCRIPTION	SIZE	ADD
–HD	Heavy-duty traffic cover rated at 10,000 lb maximum safe live load. An increased 'C' dimension is required when Heavy Duty Cover (-HD) option is specified. (See -HD Specification Sheet.)	75	3,207.00
		100	3,740.00
		125	4,345.00
		150	4,803.00
		200	5,700.00
		250	7,476.00
		300	9,255.00
		350	11,040.00
		400	12,457.00
		450	14,238.00
		500	15,391.00
–HT	Holding Tank	75	6,143.00
		100	7,826.00
		125	8,896.00
		150	10,680.00
		200	12,813.00
		250	14,591.00
		300	17,082.00
		350	21,354.00
		400	23,490.00
		450	24,554.00
		500	24,554.00
–K	Anchor flange 1-3/4" [44 mm] down from top and 2" [51 mm] wide. A 3" [76 mm] minimum extension height is required when -K option is specified.	75-500	1,781.00
–KC	Anchor flange 1-3/4" [44 mm] down from top and 2" [51 mm] wide with clamp collar. A 3" [76 mm] minimum extension height is required when -KC option is specified.	75-500	1,835.00

Flow Rate gpm [LPM]	Inlet/ Outlet inch [mm]	Approximate Weight lb [kg]	Dimensions in inches [mm]							
			B	C	D	E	F	H	K	M
75 [284]	4 [102]	263 [119]	18-1/2 [470]	4-1/4 [108]	22-3/4 [578]	35 [889]	28-5/8 [727]	25-3/4 [654]	20 [508]	8 [203]
100 [379]		368 [167]	23 [584]	4 [102]	27 [686]	41-3/4 [1060]	33-5/8 [854]	30-1/8 [765]	24-1/4 [616]	10 [254]
125 [473]		641 [291]	24-1/2 [622]	5-5/8 [143]	30-1/8 [765]	48-1/4 [1226]	40 [1016]	36-5/8 [930]	27-1/8 [689]	14-1/4 [362]
150 [568]		748 [339]	25-1/4 [641]	5-1/2 [140]	30-3/4 [781]	55 [1397]	41-3/8 [1051]	43-7/8 [1114]	28 [711]	14 [356]
200 [757]		896 [406]	29-7/8 [759]	5-5/8 [143]	35-1/2 [902]	60 [1524]	43-5/8 [1108]	46-5/8 [1184]	34-3/4 [883]	18 [457]
250 [946]		1108 [503]	36 [914]	5 [127]	41 [1041]	70 [1778]	51-5/8 [1311]	56-5/8 [1438]	38-1/4 [972]	20 [508]
300 [1136]	6 [152]	1785 [810]	39-5/8 [1006]	6-5/8 [168]	46-1/4 [1175]	79 [2007]	58-3/8 [1483]	65-5/8 [1667]	43-1/2 [1105]	20-5/8 [524]
350 [1325]		1985 [900]	43-7/8 [1114]		50-1/2 [1283]	86 [2184]	63-5/8 [1616]	74-1/8 [1883]	47-3/4 [1213]	20-1/4 [514]
400 [1514]		2260 [1025]	47-5/8 [1210]		54-1/4 [1378]	93 [2362]	67 [1702]	79-1/8 [2010]	51-1/2 [1308]	20-1/2 [521]
450 [1703]		2415 [1095]	48-5/8 [1235]		55-1/4 [1403]	99 [2515]	72 [1829]	85-3/8 [2168]	52-1/2 [1334]	22-1/4 [565]
500 [1893]		2535 [1150]	51-5/8 [1311]	5-5/8 [143]	57-1/4 [1454]	103 [2616]	74 [1880]	88-3/8 [2245]	54-1/2 [1384]	23 [584]

*Regularly furnished unless otherwise specified.

For additional product information, please visit www.zurn.ca

Z1188-ST LARGE CAPACITY OIL INTERCEPTOR WITH INTEGRAL STORAGE TANK

ENGINEERING SPECIFICATION

Zurn Z1188-ST oil interceptor features acid resistant coated interior and fabricated steel exterior, bronze cleanout plug and visible double wall trap seal, removable combination pressure equalizing/flow-diffusing baffle and sediment bucket, horizontal baffle, adjustable oil draw-off, and vent connections. Secured, gasketed, non-skid cover comes complete with flow control fitting and left-hand integral storage tank. Regularly furnished with inlet and outlet in high position.

NOTES

Location of outlet from bottom of interceptor cannot be changed.

CAUTION

Interceptors must be maintained periodically in order to ensure proper operation of the system. Follow cleaning schedule based on usage.

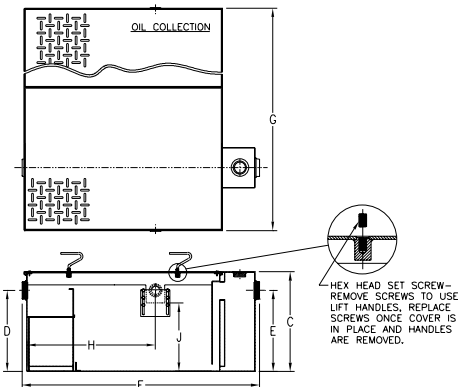

PREFIXES	DESCRIPTION	SIZE	LIST PRICE
Z1188-ST*	Acid Resistant Coated Fabricated Steel	75	28,283.00
		100	30,667.00
		125	35,775.00
		150	37,977.00
		200	41,044.00
		250	62,127.00
		300	70,348.00
		350	78,516.00
		400	90,433.00
		450	103,308.00
		500	114,066.00

SUFFIXES	DESCRIPTION	SIZE	ADD EA. ADDITIONAL 1″ OVER 6″	ADD UP TO 6″
–E	Integral Acid Resistant Coated interior and exterior fabricated steel extension section. (Specify 'C' dimension required for recessed installation.)	75	258.00	3,880.00
		100	275.00	4,047.00
		125	294.00	4,366.00
		150	316.00	4,372.00
		200	330.00	6,254.00
		250	360.00	8,132.00
		300	409.00	9,884.00
		350	455.00	9,984.00
		400	501.00	13,660.00
		450	526.00	15,935.00
		500	543.00	18,231.00

SUFFIXES	DESCRIPTION	SIZE	ADD
–HD	Heavy-duty traffic cover rated at 10,000 lb maximum safe live load. An increased 'C' dimension is required when -HD option is specified. (See -HD Specification Sheet.)	75	8,662.00
		100	11,920.00
		125	13,074.00
		150	15,301.00
		200	17,451.00
		250	24,086.00
		300	30,921.00
		350	36,463.00
		400	41,992.00
		450	47,981.00
		500	51,291.00
–K	Anchor flange 1-3/4″ down from top and 2″ wide. A 3″ minimum extension height is required when anchor flange (–K) option is specified. (Specify 'C' dimension height required and price for –E plus –K.)	75	1,852.00
		100	2,077.00
		125	2,486.00
		150	2,896.00
		200	3,102.00
		250	4,144.00
		300	4,684.00
		350	5,224.00
		400	5,547.00
		450	5,876.00
		500	6,203.00
–KC	Anchor flange 1-3/4″ down from top and 2″ wide with clamp collar. Same dimensional requirements as –K. Price for –E plus –KC.	75	3,362.00
		100	3,759.00
		125	4,210.00
		150	4,660.00
		200	5,444.00
		250	7,058.00
		300	7,919.00
		350	8,775.00
		400	9,324.00
		450	9,881.00
		500	10,444.00
–PW	Plug Wrench		132.00
–STR	Storage tank on right-hand side when facing the inlet.		N/C

Flow Rate gpm [LPM]	Inlet/ Outlet inch [mm]	Water Capacity gallon [L]	Oil Capacity gallon [L]	Approximate Weight lb [kg]	No. of Covers Trap	No. of Covers Tank	Dimensions in inches [mm] C	D/E	F	G	H	J
75 [284]	3 [76]	88 [333]	125 [473]	615 [279]	1	1	22-3/4 [578]	18-1/2 [470]	51-3/8 [1305]	65-3/8 [1661]	29-1/4 [743]	15-1/2 [394]
100 [379]		159 [602]	250 [946]	800 [363]			27 [686]	23 [584]	60-3/8 [1534]	82-3/8 [2092]	35-1/4 [895]	19-3/4 [502]
125 [473]		208 [787]		1450 [658]	2	2	30-1/8 [765]	24-1/2 [622]	64-1/4 [1632]	84-5/8 [2149]	36 [914]	21 [533]
150 [568]	4 [102]	235 [890]		1640 [744]			30-3/4 [781]	25-1/4 [641]	68-1/4 [1734]	82-3/4 [2102]	38-11/16 [983]	21-5/8 [549]
200 [757]		333 [1261]	400 [1514]	1950 [885]			35-1/2 [902]	29-7/8 [759]	71-3/8 [1813]	92-3/4 [2356]	43-1/2 [1105]	26-3/8 [670]
250 [946]	5 [127]	445 [1685]		2650 [1202]			41 [1041]	36 [914]	75-1/2 [1918]	95-5/8 [2429]	40-3/4 [1035]	32-1/2 [826]
300 [1136]		664 [2514]		3400 [1542]			46-1/4 [1175]	39-5/8 [1006]	82-3/8 [2092]	92-3/8 [2346]	48-1/16 [1221]	37-3/4 [959]
350 [1325]	6 [152]	1006 [3808]	700 [2650]	4000 [1814]			50-1/2 [1283]	43-7/8 [1114]	103-1/8 [2619]	104-3/4 [2661]	61-15/16 [1573]	40-3/8 [1026]
400 [1514]		1266 [3808]		4700 [2132]			54-1/4 [1378]	47-5/8 [1210]	110-1/8 [2797]	102-5/8 [2607]	66-9/16 [1691]	44-1/8 [1121]
450 [1703]		1575 [5962]		5200 [2359]			55-1/4 [1403]	48-5/8 [1235]	123-1/8 [3127]	102-7/8 [2613]	75-1/4 [1911]	44-5/8 [1133]
500 [1893]		1695 [6416]		5500 [2495]			57-1/4 [1454]	51-5/8 [1311]	124-1/8 [3153]	103-5/8 [2632]	73-15/16 [1878]	48-1/8 [1222]

For additional product information, please visit www.zurn.ca

**Regularly furnished unless otherwise specified.*

Z1189 OIL/SEDIMENT INTERCEPTOR WITH HEAVY-DUTY GRATE

ENGINEERING SPECIFICATION

Zurn Z1189 oil/sediment interceptor features acid resistant coated interior and fabricated steel exterior, bronze cleanout plug and visible double wall trap seal, removable sediment bucket, horizontal baffle, internal vent connection, and Dura-Coated heavy-duty cast iron grate.

CAUTION

Interceptors must be maintained periodically in order to ensure proper operation of the system. Follow cleaning schedule based on usage.

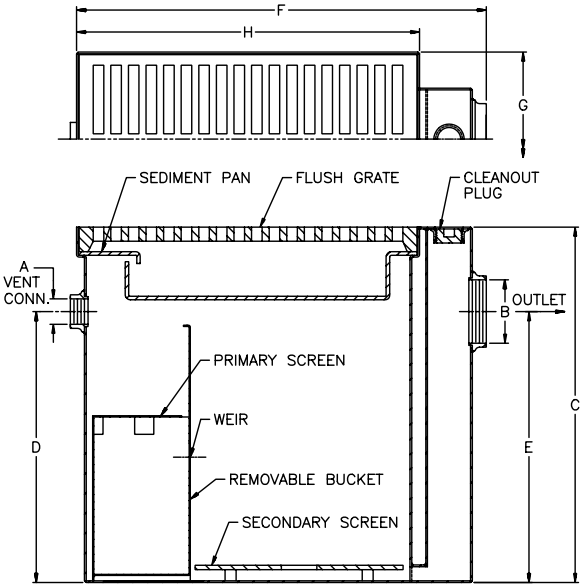

PREFIXES	DESCRIPTION	SIZE	LIST PRICE
Z1189*	Acid Resistant Coated Fabricated Steel	12	4,493.00
		60	12,740.00
		100	18,141.00
		200	22,421.00
		300	27,630.00

SUFFIXES	DESCRIPTION		ADD
–DG	Duresist Grate		638.00

			EA. ADDITIONAL 1″ OVER 6″	UP TO 6″
–E	Acid Resistant Coated interior and exterior fabricated steel extension section. (Specify 'C' dimension required.)	12	110.00	1,248.00
		60	146.00	1,674.00
		100	214.00	2,585.00
		200	327.00	3,828.00
		300	286.00	4,381.00

		SIZE	ADD
–K	Anchor flange 1-3/4″ down from top and 2″ wide	12	1,074.00
		60	1,602.00
		100	1,958.00
		200	2,491.00
		300	2,909.00
–KC	Anchor flange 1-3/4″ down from top and 2″ wide	12	1,158.00
		60	1,646.00
		100	2,139.00
		200	2,759.00
		300	3,493.00
–PW	Plug Wrench		132.00
–SC	Heavy-Duty Solid Traffic Cover (maximum safe live load 10,000 lb)	12	845.00
		60	1,680.00
		100	2,744.00
		200	4,821.00
		300	7,078.00

Size	Sludge Capacity lb [kg]	Grate Open Area inch [mm]	No. of Grates	No. of Pans	Approximate Weight lb [kg]	Dimensions in inches [mm]							
						A Vent Size	B Pipe Size	C	D	E	F	G	H
12	12 [5]	49 [1245]	1	1	70 [32]	-	2 [51]	15 [381]	-	10-1/2 [267]	17-1/8 [435]	11-3/8 [289]	12-3/8 [314]
60	60 [27]	131 [3327]			175 [79]	2	4 [102]	25-1/4 [641]	19-1/4 [489]	17-5/8 [448]	29-1/8 [740]	12-3/8 [314]	24-3/8 [619]
100	100 [45]	262 [6655]	2		280 [127]			33 [838]	27 [686]	22 [559]		24-3/8 [619]	
200	200 [91]	393 [9982]	3		370 [168]						41-1/8 [1045]		36-3/8 [924]
300	300 [136]	524 [13309]	4		460 [209]						53-1/8 [1349]		48-3/8 [1229]

*Regularly furnished unless otherwise specified.

For additional product information, please visit www.zurn.ca

Z1194 OIL LEVEL SENSOR RETROFIT KIT

ENGINEERING SPECIFICATION

Zurn Z1194 oil level sensor retrofit kit features a fiberglass sensor box containing an electronic oil level sensor and a fiberglass display box with one green power light, red oil level light, audible alarm, and junction box. Intended use for retrofit applications on Z1186 and Z1188 oil interceptors. Power supply 100 to 240 VAC at 47 to 63 Hz, GFCI.

CAUTION

Caution: Interceptor must be cleaned of solids and other debris and the sensors wiped off on a regular basis in order to ensure proper operation of the system. Z1194 TO BE USED WITH INTERCEPTORS FOR ON-THE-FLOOR INSTALLATION ONLY.

PREFIXES	DESCRIPTION	LIST PRICE
Z1194	Oil Level Sensor Retrofit Kit	9,506.00

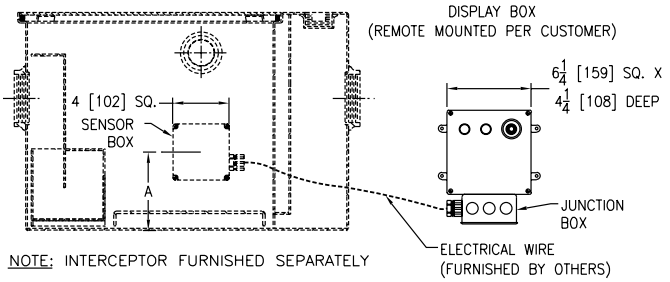

Z1186	
Flow Rate gpm [LPM]	A Dimensions inch [mm]
10 [38]	5-7/16 [138]
15 [57]	
20 [76]	6-5/8 [168]
25 [95]	7-3/4 [197]
35 [132]	
50 [189]	9-1/16 [230]

Z1188	
Flow Rate gpm [LPM]	A Dimensions inch [mm]
75 [284]	10 [254]
100 [379]	15-3/8 [391]
125 [473]	15-11/16 [398]
150 [568]	17-5/16 [440]
200 [757]	21-1/16 [535]
250 [946]	27-13/16 [706]
300 [1136]	32 [813]
350 [1325]	35-5/16 [897]
400 [1514]	39-5/16 [999]
450 [1703]	40-3/8 [1026]
500 [1893]	43-3/16 [1097]

Z1196 OIL INTERCEPTOR WITH OIL LEVEL SENSOR

ENGINEERING SPECIFICATION

Zurn Z1196 oil interceptor features acid resistant coated interior and fabricated steel exterior with a fiberglass sensor box containing an electronic oil level sensor (specify right or left side†) and a fiberglass display box with one green power light, red oil level light, audible alarm and junction box. Includes bronze cleanout plug and visible double wall trap seal, removable combination pressure equalizing/flow-diffusing baffle and sediment bucket, horizontal baffle, and vent connections either side. Secured, gasketed, non-skid cover comes complete with flow control fitting. Regularly furnished with inlet and outlet in high position.

NOTES

1. †Installed sensor box is mounted on the left- or right-hand side of the unit when facing inlet (must be specified).
2. ‡Inlet and outlet sizes shown indicate standard operating sizes and flow control settings. Size #300 and #400 will have 3″ connections reduced to 2″ as standard. Size #700 and #800 will have 4″ connections reduced to 3″ as standard. If changed, flow control must be adjusted accordingly.
3. Power supply 120V GFCI.
4. Recommended Installations: Sitting on the floor or recessed in a pit only. (A pit installation requires that a drain or sump pump be installed to keep the pit relatively dry.)
5. For pit installation, see Form No. IT66.

CAUTION

Interceptors must be maintained periodically in order to ensure proper operation of the system. Follow cleaning schedule based on usage.

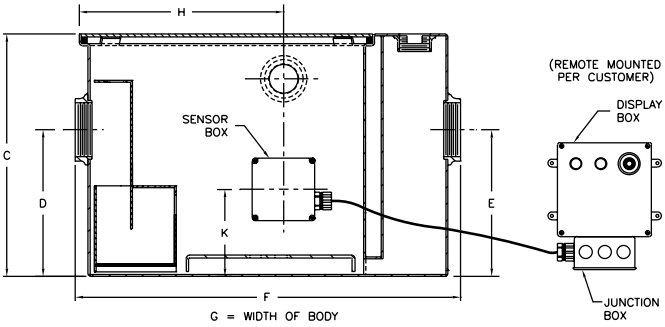

PREFIXES	DESCRIPTION	SIZE	LIST PRICE
Z1196	Acid Resistant Coated Fabricated Steel	300	14,751.00
		400	17,294.00
		500	19,248.00
		600	21,551.00
		700	22,879.00
		800	28,038.00

SUFFIXES	DESCRIPTION	ADD
–PW	Plug Wrench	132.00

Size	Inlet/ Outlet inch [mm]	Flow Rate gpm [LPM]	Water Capacity gallon [L]	Oil Capacity gallon [L]	Approximate Weight lb [kg]	Dimensions in inches [mm]					
						C	D/E	F	G	H	K
300	2 [51]	10 [38]	7 [26]	1 [4]	56 [25]	13-7/8 [352]	8-1/8 [206]	25-1/8 [638]	14 [356]	11-5/8 [295]	5-7/16 [138]
400		15 [57]	9 [34]		77 [35]	14 [356]	8-1/4 [210]	25-1/4 [641]	14-1/8 [359]		
500	3 [76]	20 [76]	10 [38]	1-1/2 [6]	106 [48]	15-1/2 [394]	9-3/8 [238]	27-1/8 [689]	16-3/4 [425]	13-1/4 [337]	6-5/8 [168]
600		25 [95]	16 [61]	3-1/2 [13]	116 [53]	18-1/4 [464]	11-3/4 [298]	30 [762]	17-1/4 [438]	16 [406]	7-3/4 [197]
700		35 [132]	21 [79]	5 [19]	140 [64]	19-3/4 [502]	12-1/2 [318]	32-1/4 [819]	19-7/8 [505]	16-3/8 [416]	
800		50 [189]	30 [114]	7 [26]	171 [78]	24-1/4 [616]	14-3/16 [360]	34-1/8 [867]	22-1/2 [572]	17-1/4 [438]	9-1/16 [230]

*Regularly furnished unless otherwise specified.

For additional product information, please visit www.zurn.ca

Z1198 LARGE CAPACITY OIL INTERCEPTOR WITH OIL LEVEL SENSOR

ENGINEERING SPECIFICATION

Zurn Z1198 oil interceptor with a fiberglass sensor box containing an electronic oil level sensor (specify right or left side†) features large capacity, acid resistant coated interior and fabricated steel exterior, and a fiberglass display box with one green power light, red oil level light, audible alarm and junction box. Includes bronze cleanout plug and visible double wall trap seal, removable combination pressure equalizing/flow-diffusing baffle and sediment bucket, horizontal baffle, and vent connections either side. Secured, gasketed, non-skid cover comes complete with flow control fitting. Regularly furnished with inlet and outlet in high position.

NOTES

1. †Installed sensor box is mounted on the left- or right-hand side of the unit when facing inlet (must be specified).
2. Power supply 120V GFCI.

RECOMMENDED INSTALLATIONS

Sitting on the floor or recessed in a pit only. (A pit installation requires that a drain or sump pump be installed to keep the pit relatively dry.)
For pit installation, see Form No. IT62.

CAUTION

Interceptors must be maintained periodically in order to ensure proper operation of the system. Follow cleaning schedule based on usage.

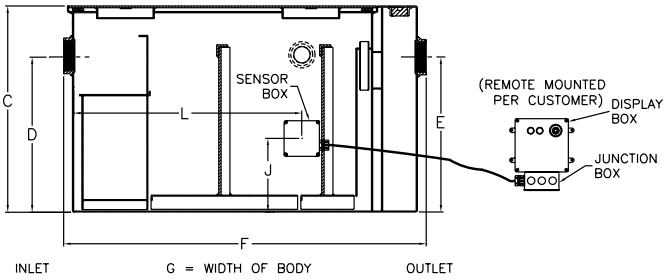

PREFIXES	DESCRIPTION	SIZE	LIST PRICE
Z1198	Acid Resistant Coated Fabricated Steel	75	42,762.00
		100	45,698.00
		125	51,995.00
		150	54,707.00
		200	74,013.00
		250	84,454.00
		300	94,584.00
		350	104,649.00
		400	119,332.00
		450	135,192.00
		500	148,448.00

SUFFIXES	DESCRIPTION	ADD
–PW	Plug Wrench	132.00

Flow Rate gpm [LPM]	Inlet/ Outlet inch [mm]	Water Capacity gallon [L]	Oil Capacity gallon [L]	Approximate Weight lb [kg]	No. of Covers	Dimensions in inches [mm]					
						C	D/E	F	G	J	L
75 [284]	3 [76]	65 [246]	20 [76]	332 [151]	1	22-3/4 [578]	18-1/2 [470]	36 [914]	28-5/8 [727]	10 [254]	25-3/4 [654]
100 [379]		110 [416]	27 [102]	432 [196]		27 [686]	23 [584]	42-3/4 [1086]	33-5/8 [854]	15-3/8 [391]	30-1/8 [765]
125 [473]		150 [568]	33 [125]	780 [354]	2	30-1/8 [765]	24-1/2 [622]	49-1/4 [1251]	40 [1016]	15-11/16 [398]	36-5/8 [930]
150 [568]	4 [102]	190 [719]	40 [151]	888 [403]		30-3/4 [781]	25-1/4 [641]	56 [1422]	41-3/8 [1051]	17-5/16 [440]	43-7/8 [1114]
200 [757]		265 [1003]	53 [201]	1055 [479]		35-1/2 [902]	29-7/8 [759]	61 [1549]	43-5/8 [1108]	21-1/16 [535]	46-5/8 [1184]
250 [946]	5 [127]	460 [1741]	67 [254]	1438 [652]		41 [1041]	36 [914]	71 [1803]	51-3/8 [1305]	27-13/16 [706]	56-5/8 [1438]
300 [1136]		660 [2498]	80 [303]	1840 [835]		46-1/4 [1175]	39-5/8 [1006]	80 [2032]	58-3/8 [1483]	32 [813]	65-5/8 [1667]
350 [1325]	6 [152]	860 [3255]	93 [352]	2180 [989]		50-1/2 [1283]	43-7/8 [1114]	87 [2210]	63-5/8 [1616]	35-5/16 [897]	74-1/8 [1883]
400 [1514]		1090 [4126]	107 [405]	2536 [1150]	3	54-1/4 [1378]	47-5/8 [1210]	94 [2388]	67 [1702]	39-5/16 [999]	79-1/8 [2010]
450 [1703]		1275 [4826]	120 [454]	2816 [1277]		55-1/4 [1403]	48-5/8 [1235]	100 [2540]	72 [1829]	40-3/8 [1026]	85-3/8 [2169]
500 [1893]		1435 [5432]	133 [503]	2970 [1347]		57-1/4 [1454]	51-5/8 [1311]	104 [2642]	74 [1880]	43-3/16 [1097]	88-3/8 [2245]

Z1198-ST LARGE CAPACITY OIL INTERCEPTOR WITH INTEGRAL STORAGE TANK AND OIL LEVEL FLOAT SENSOR

ENGINEERING SPECIFICATION

Zurn Z1198-ST oil interceptor features acid resistant coated interior and fabricated steel exterior, fiberglass sensor box containing an electronic oil level sensor, fiberglass display box with audio and visual alarms and junction box. Includes bronze cleanout plug and visible double wall trap seal, removable combination pressure equalizing/flow-diffusing baffle and sediment bucket, adjustable oil draw-off, and vent connections. Secured, gasketed, non-skid cover comes complete with flow control fitting and left hand integral storage tank. Regularly furnished with inlet and outlet in high position.

NOTES

Location of inlet and outlet from bottom of interceptor cannot be changed.

CAUTION

Interceptors must be maintained periodically in order to ensure proper operation of the system. Follow cleaning schedule based on usage.

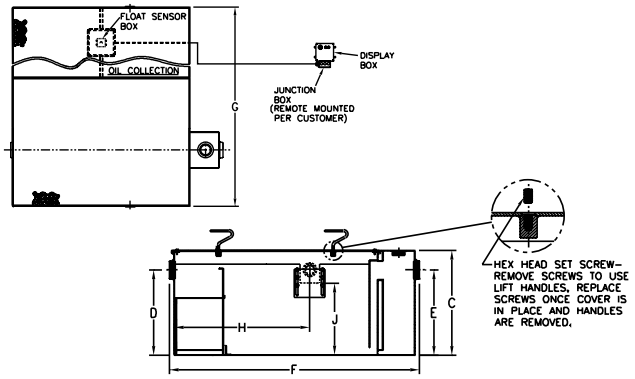

PREFIXES	DESCRIPTION	SIZE	LIST PRICE
Z1198-ST*	Acid Resistant Coated Fabricated Steel	75	59,044.00
		100	62,975.00
		125	71,276.00
		150	74,909.00
		200	100,566.00
		250	114,483.00
		300	127,948.00
		350	141,344.00
		400	160,844.00
		450	181,945.00
		500	199,547.00

SUFFIXES	DESCRIPTION	SIZE	ADD: EA. ADDITIONAL 1″ OVER 10″	ADD: UP TO 10″
–E	Integral Acid Resistant Coated interior and exterior fabricated steel extension section. (Specify 'C' Dim. required for recessed installation.)	75	433.00	6,353.00
		100	453.00	6,627.00
		125	490.00	6,903.00
		150	515.00	7,166.00
		200	534.00	10,260.00
		250	596.00	13,313.00
		300	687.00	16,202.00
		350	756.00	19,173.00
		400	814.00	22,372.00
		450	861.00	26,092.00
		500	895.00	29,874.00

SUFFIXES	DESCRIPTION	SIZE	ADD
–HD	Heavy-Duty Traffic Cover rated at 10,000 lb maximum safe live load. An increased 'C' dim. is required when -HD option is specified.	75	14,166.00
		100	19,532.00
		125	21,411.00
		150	25,066.00
		200	28,594.00
		250	39,430.00
		300	50,644.00
		350	59,733.00
		400	68,767.00
		450	78,597.00
		500	84,051.00
–K	Anchor flange 1 3/4″ down from top and 2″ wide. A 3″ minimum extension height is required when anchor flange (-K) option is specified. (Specify 'C' Dim. height required.)	75	3,055.00
		100	3,425.00
		125	4,063.00
		150	4,746.00
		200	5,064.00
		250	6,798.00
		300	7,676.00
		350	8,551.00
		400	9,078.00
		450	9,610.00
		500	10,179.00
–KC	Anchor flange 1 3/4″ down from top and 2″ wide with clamp collar. A 3″ minimum extension height is required when anchor flange (-KC) option is specified. (Specify 'C' Dim. height required.)	75	5,519.00
		100	6,159.00
		125	6,903.00
		150	7,632.00
		200	8,910.00
		250	11,541.00
		300	12,994.00
		350	14,360.00
		400	15,154.00
		450	16,200.00
		500	16,881.00
–STR	Storage tank on right-hand side when facing the inlet.		N/C

Flow Rate gpm [LPM]	Inlet/ Outlet inch [mm]	Water Capacity gallon [L]	Oil Capacity gallon [L]	Approximate Weight lb [kg]	No. of Covers: Trap	No. of Covers: Tank	Dimensions in inches [mm]: C	D/E	F	G	H	J
75 [284]	3 [76]	88 [333]	125 [473]	615 [279]	1	1	22-3/4 [578]	18-1/2 [470]	51-3/8 [1305]	65-3/8 [1661]	29-1/4 [743]	15-1/2 [394]
100 [379]		159 [602]	250 [946]	800 [363]			27 [686]	23 [584]	60-3/8 [1534]	82-3/8 [2092]	35-1/4 [895]	19-3/4 [502]
125 [473]		208 [787]		1450 [658]	2	2	30-1/8 [765]	24-1/2 [622]	64-1/4 [1632]	84-5/8 [2149]	36 [914]	21 [533]
150 [568]	4 [102]	235 [890]		1640 [744]			30-3/4 [781]	25-1/4 [641]	68-1/4 [1734]	82-3/4 [2102]	38-11/16 [983]	21-5/8 [549]
200 [757]		333 [1261]	400 [1514]	1950 [885]			35-1/2 [902]	29-7/8 [759]	71-3/8 [1813]	92-3/4 [2356]	43-1/2 [1105]	26-3/8 [670]
250 [946]	5 [127]	445 [1685]		2650 [1202]			41 [1041]	36 [914]	75-1/2 [1918]	95-5/8 [2429]	40-3/4 [1035]	32-1/2 [826]
300 [1136]		664 [2514]		3400 [1542]			46-1/4 [1175]	39-5/8 [1006]	82-3/8 [2092]	92-3/8 [2346]	48-1/16 [1221]	37-3/4 [959]
350 [1325]	6 [152]	1006 [3808]	700 [2650]	4000 [1814]			50-1/2 [1283]	43-7/8 [1114]	103-1/8 [2619]	104-3/4 [2661]	61-15/16 [1573]	40-3/8 [1026]
400 [1514]		1266 [3808]		4700 [2132]			54-1/4 [1378]	47-5/8 [1210]	110-1/8 [2797]	102-5/8 [2607]	66-9/16 [1691]	44-1/8 [1121]
450 [1703]		1575 [5962]		5200 [2359]			55-1/4 [1403]	48-5/8 [1235]	123-1/8 [3127]	102-7/8 [2613]	75-1/4 [1911]	44-5/8 [1133]
500 [1893]		1695 [6416]		5500 [2495]			57-1/4 [1454]	51-5/8 [1311]	124-1/8 [3153]	103-5/8 [2632]	73-15/16 [1878]	48-1/8 [1222]

*Regularly furnished unless otherwise specified.

For additional product information, please visit www.zurn.ca

NOTES

SD1021

CARRIER SYSTEMS

CARRIER – APPLICATION INDEX 226

CARRIER – PRODUCT COMPLIANCE 226

CARRIER – TECHNICAL DATA 226

CARRIER – HOW TO SPECIFY 226

CARRIER – TECHNICAL DATA 227

Z1200 CARRIER TOOLS AND ACCESSORIES 228

Ⓛ **Z1201-N** EZCARRY® ADJUSTABLE HORIZONTAL HIGH PERFORMANCE SIPHON JET – NO-HUB SERIES 230

Ⓛ **Z1201-H** EZCARRY® ADJUSTABLE HORIZONTAL HIGH PERFORMANCE SIPHON JET – HUB AND SPIGOT SERIES 232

Z1201-N-XB EZCARRY® BARIATRIC CARRIER – 1000 LB ADJUSTABLE HORIZONTAL SIPHON JET – NO-HUB SERIES 234

Z1201-N-XH EZCARRY® EXTRA HEAVY-DUTY 750 LB ADJUSTABLE HORIZONTAL SIPHON JET – NO-HUB SERIES 235

Ⓛ **ZE1201-N** EZCARRY® ADJUSTABLE HORIZONTAL SIPHON JET WITH ELONGATED FITTING – NO-HUB SERIES 236

Ⓛ **ZE1201-H** EZCARRY® ADJUSTABLE HORIZONTAL SIPHON JET WITH ELONGATED FITTING – HUB AND SPIGOT SERIES 238

Ⓛ **ZF1201-N** EZCARRY® HORIZONTAL SIPHON JET ONE-PIECE CARRIER – NO-HUB SERIES 240

Ⓛ **ZN1201-N** EZCARRY® ADJUSTABLE HORIZONTAL SIPHON JET – NO-HUB NARROW WALL SYSTEM (9-3/8" DEPTH FRONT TO BACK) 241

Ⓛ **Z1202-N** EZCARRY® ADJUSTABLE VERTICAL HIGH PERFORMANCE SIPHON JET – NO-HUB SERIES 242

Ⓛ **Z1202-H** EZCARRY® ADJUSTABLE VERTICAL HIGH PERFORMANCE SIPHON JET – HUB AND SPIGOT SERIES 244

Z1202-N-XB EZCARRY® BARIATRIC CARRIER – 1000 LB ADJUSTABLE VERTICAL SIPHON JET – NO-HUB SERIES 246

Z1202-N-XH EZCARRY® EXTRA HEAVY-DUTY 750 LB ADJUSTABLE VERTICAL SIPHON JET – NO-HUB SERIES 247

Ⓛ **ZF1202-N** EZCARRY® VERTICAL SIPHON JET ONE-PIECE CARRIER – NO-HUB SERIES 248

Ⓛ **ZN1202-N** EZCARRY® ADJUSTABLE VERTICAL SIPHON JET – NO-HUB NARROW WALL SYSTEM 249

Z1203-N ADJUSTABLE HORIZONTAL SIPHON JET – NO-HUB SERIES 250

Z1203-H ADJUSTABLE HORIZONTAL SIPHON JET – HUB AND SPIGOT SERIES 252

Ⓛ **ZE1203-N** ADJUSTABLE HORIZONTAL SIPHON JET WITH ELONGATED FITTING – NO-HUB SERIES 254

Ⓛ **ZE1203-H** ADJUSTABLE HORIZONTAL SIPHON JET WITH ELONGATED FITTING – HUB AND SPIGOT SERIES 256

Z1204-H ADJUSTABLE VERTICAL SIPHON JET – HUB AND SPIGOT SERIES 258

Z1204-N ADJUSTABLE VERTICAL SIPHON JET – NO-HUB SERIES 260

Z1207-N ADJUSTABLE HORIZONTAL HIGH ROUGH-IN SIPHON JET – NO-HUB 262

Z1208-N VERTICAL SIPHON JET WATER CLOSET SUPPORT SYSTEM – NO-HUB 263

Z1208-H VERTICAL SIPHON JET WATER CLOSET SUPPORT SYSTEM – HUB AND SPIGOT 264

Z1209-N VERTICAL OFFSET SIPHON JET WATER CLOSET SUPPORT SYSTEM – NO-HUB 265

ZN1209-N VERTICAL OFFSET SIPHON JET – NO-HUB NARROW WALL SYSTEM 266

Z1212 WALL CLOSET SUPPORT SYSTEM 267

Z1213-N 4" VERTICAL SIPHON JET WATER CLOSET SUPPORT SYSTEM – 2" OR 4" TOP VENT CLOSET FITTING ONLY (NO SUPPORT) 268

Z1216 90° DOUBLE NO-HUB SYSTEM FOR FLOOR MOUNTED BACK OUTLET WATER CLOSETS 269

Z1217 COUPLING TYPE SYSTEM – WALL URINAL/SERVICE SINK 270

Z1218 COUPLING TYPE SYSTEM – WALL URINAL/SERVICE SINK 271

Z1221 PLATE TYPE SYSTEM – WALL URINALS 272

Z1222 PLATE TYPE SYSTEM – WITH BEARING PLATE 272

Z1223 PLATE TYPE SYSTEM – TROUGH URINALS 273

Z1224 PLATE TYPE SYSTEM – LAVATORY WITH BACK 273

Z1225 PLATE TYPE SYSTEM – WATER COOLERS 274

Z1229 PLATE AND EXPOSED ARM – HEAVY SINKS 274

Z1231 CONCEALED ARM SYSTEM – WALL LAVATORIES 275

Ⓛ **Z1231EZ** UNIVERSAL LAVATORY CARRIER – WALL LAVATORIES 275

Z1236 EXPOSED ARM SYSTEM – WALL LAVATORIES/SINKS 276

Z1251 CONCEALED ARM SYSTEM – WALL SUPPORTED 277

Z1253 ADJUSTABLE CONCEALED ARM SYSTEM – WALL SUPPORTED 277

Z1255 EXPOSED ARM SYSTEM – WALL SUPPORTED 278

Z1256 EXPOSED ARM SYSTEM – WALL SUPPORTED 279

Z1257 EXPOSED ARM SYSTEM – WALL SUPPORTED 279

Z1258 EXPOSED ARM SYSTEM – WALL SUPPORTED 280

Z1259 PLATE SYSTEM – WALL SUPPORTED 281

Z1280 WOOD STUD SUPPORTED WATER CLOSET CARRIER – NO-HUB 282

Z1282 WOOD STUD SUPPORTED WATER CLOSET CARRIER – HUB AND SPIGOT 282

Z1283 WOOD STUD SUPPORTED WATER CLOSET CARRIER – PLASTIC PIPE 283

Z1284 CONCRETE FLOOR SUPPORTED WATER CLOSET CARRIER 283

Z1285 WOOD STUD SUPPORTED WATER CLOSET CARRIER 284

CARRIER – APPLICATION INDEX

APPLICATION	TYPE	RECOMMENDED CARRIER
Commercial (Cement Slab) Construction Off-the-Floor Closet	300 lb Rigid System	Z1201, ZE1201, ZF1201, ZN1201, Z1202, ZF1202, ZN1202 Z1203, ZE1203, Z1204, Z1207, Z1208, Z1209, ZN1209
	500 lb Rigid System	Z1201, Z1202, ZE1201, ZF1201, ZN1201, ZF1202, ZN1202
	750 lb Extra-Heavy-Duty	Z1201-XH, Z1202-XH
	1000 lb Bariatric	Z1201-XB, Z1202-XB
Wood Stud and Residential Off-the-Floor Closet		Z1212, Z1280, Z1282, Z1283, Z1284, Z1285
Penal Fixtures and Floor Mounted Back Outlet Fixtures		Z1216
Off-the-Floor Lavatories	Plate Type	Z1224, Z1224-EZ, Z1259 (No Uprights)
	Concealed Arm	Z1231, Z1231EZ, Z1251, Z1253 (No Uprights)
	Exposed Arm	Z1236, Z1256, Z1257, Z1258 (No Uprights)
Wash Sinks, Mop Sinks, Heavy Cast Sinks, Service Sinks		Z1217, Z1218, Z1229
Off-the-Floor Urinals		Z1221, Z1221-EZ, Z1222, Z1222-EZ, Z1223
Drinking Fountains, Water Coolers		Z1225
System Accessories		Z1200

CARRIER – PRODUCT COMPLIANCE

Zurn systems comply with ANSI A112.6.1M and are listed with IAPMO. For verification of a selected carrier, contact your local Zurn Sales Representative.

CARRIER – HOW TO SPECIFY

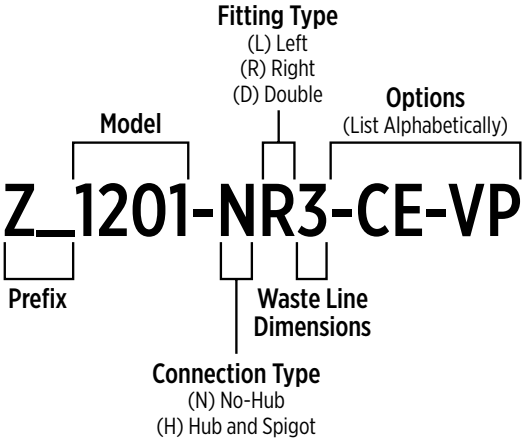

CARRIER – TECHNICAL DATA

DETERMINATION OF RIGHT- AND LEFT-HAND SYSTEMS

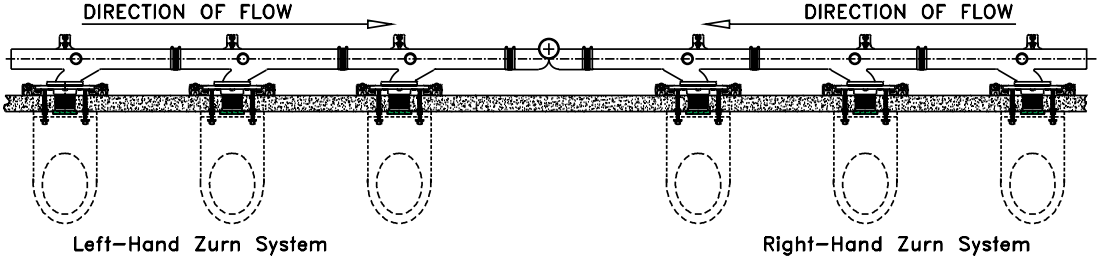

Stand facing the fixture.

If flow is from the right, Zurn System is right-hand. If flow is from the left, Zurn System is left-hand.

DETERMINATION OF COUPLING AND FIXTURE DISTANCES FROM FRONT OF WALL

To ensure a tight seal at outlet of closet having a rectangular groove, the front end of the coupling should be located to compress the gasket adequately when the fixture is in the desired location. This dimension will vary depending on depth of recess (Dim. A) in closet. The following formula may be used to determine amount coupling should extend (Dim. B) in front of finished wall.

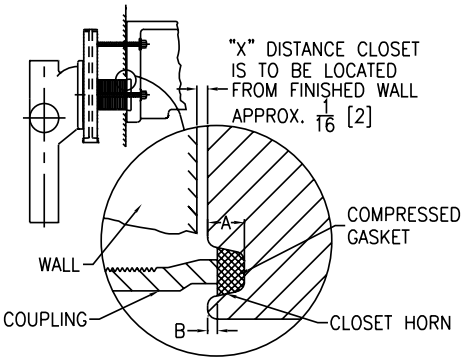

Inset illustrates depth of gasket recess in fixture and coupling with normal pressure on gasket.

A = depth of recess in closet

X = distance closet is to be located from finished wall

B = distance coupling should extend in front of finished wall.

Thus, A + X - 1/2" = B

With fixtures having vee-shaped grooves, coupling may have to extend an additional 1/8" or more. With any closet, the coupling must compress the gasket enough so that the adhesive-coated surfaces are in good contact with the china and the face of the coupling.

IMPORTANT: Bearing nuts and washers must be located properly to establish and maintain dimension "X."

DISTANCE FIXTURE BOLTS LOCATED IN FRONT OF WALL

To locate fixture bolts:

T = thickness of wall flange of closet

X = distance closet is to be located from finished wall

B = distance fixture studs should extend in front of finished wall.

Thus, T + X + 5/8" = B

"Minimum 'P' Dimension" is the minimum dimension from front of faceplate to finished wall:

Z1201/Z1202/Z1203/Z1204	Z1208 thru Z1209
1-3/4"	1"

"Standard 'P' Dimension" which is regularly supplied unless otherwise specified, provides for the following dimensions from the front of the faceplate to finished wall:

Z1201/Z1202/Z1203/Z1204		Z1208 thru Z1209	
MIN.	MAX.	MIN.	MAX.
5"	6"	4"	5-1/8"

Longer 'P' dimensions (or shorter) with couplings up to, and including 12", are furnished at no extra charge. An additional charge will be made for greater 'P' dimensions (see Suffix -CL).

ALLOWANCE FOR CONCEALED FLUSH VALVES

When wall closets are installed with concealed flush valves having rear inlet supply, location of faceplate is important – for Siphon Jet bowls, it is not necessary to locate faceplate behind supply line, since supply line will clear top of faceplate and vent line. For Blow Out installations, however, faceplate must be located behind supply line to prevent interference of faceplate with supply line.

Dimensions below based on B = 3/8".

Z1201/Z1202/Z1203/Z1204			
'P' Dimension*			
Min.	Max.	Coupling Length	Stud Length
1-3/4	2-3/4	2-3/4	6
2-1/2	3-1/2	3-1/2	8
3	4	4	8
4	5	5	8
5	6	6	9
6	7	7	10
7	8	8	11-1/4
7-1/2	8-1/2	8-1/2	11-1/4
8-1/4	9-1/4	9-1/4	12-3/4
9	10	10	12-3/4
10	11	11	15-3/4
11	12	12	15-3/4

Z1208 thru Z1209			
'P' Dimension*			
Min.	Max.	Coupling Length	Stud Length
1	1-7/8	2-3/4	6
1-1/2	2-5/8	3-1/2	8
2	3-1/8	4	8
3	4-1/8	5	8
4	5-1/8	6	9
5	6-1/8	7	9
6	7-1/8	8	11-1/4
6-1/2	7-5/8	8-1/2	11-1/4
7-1/4	8-3/8	9-1/4	12-3/4
8	9-1/8	10	12-3/4
9	10-1/8	11	15-3/4
10	11-1/8	12	15-3/4

Z1200 CARRIER TOOLS AND ACCESSORIES

EZCARRY-HANDLE

Z1200-CPLGWRNCH

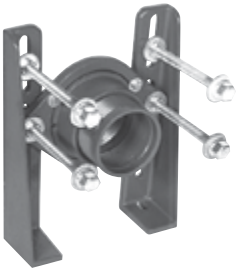

Z1200-AUX-SPRT

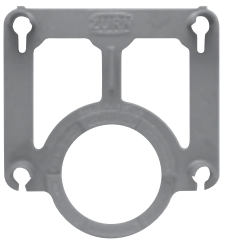

Z1200-RI-GAUGE

Z1200-NEOSEAL-GSKT-4

Z1200-RTRFT-NUT

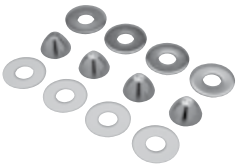

Z1200-VP-HARDWARE

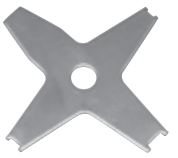

Z1200-VP-WRENCH

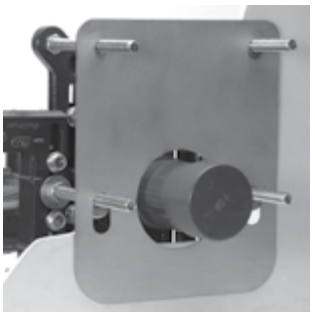

EZCUTGUIDE†

†Image showing old style carrier

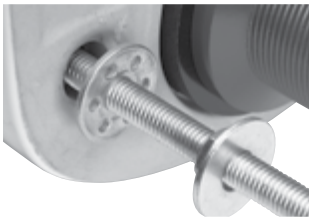

Z1200-ADJ-NUT

Z1200-OFL Patented

Z1200-OFR Patented

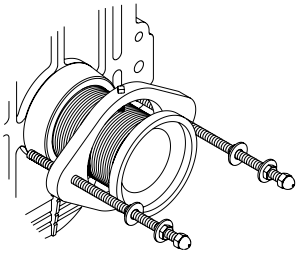

Z1200-FLRMNT-ADPT

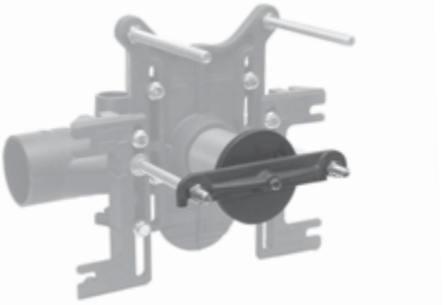

Z1200-CC-TESTCAP shown on Z1201-N†

Z1200-CC-TESTCAP

†Image showing old style carrier

*Regularly furnished unless otherwise specified.
For additional product information, please visit www.zurn.ca

This symbol denotes a product that is engineered to reduce installation and rework time.

For Additional System Tools See "Z1200 Carrier Tools and Accessories" on page 228

Z1200 CARRIER TOOLS AND ACCESSORIES

PRODUCT NUMBER	DESCRIPTION	LIST PRICE
EZCARRY-HANDLE	Carry Handle for Z1201/ Z1202	121.00
EZCUTGUIDE	EZ-Set Cutting Guide for use with -CE coupling system	135.00
Z1200-ADJ-NUT	Flush Wall Adjustment Nut/Washer	N/C
Z1200-AUX-SPRT	Auxiliary Support Assembly (Required For P-Dim. Greater than 18")	861.00
Z1200-AUX-FT-SPRT	Auxiliary Foot Support Assembly (Required For P-Dim. 7" - 18")	322.00
Z1200-CC-TESTCAP	Mechanical Test Cap Assembly for -CC Coupling	118.00
Z1200-CPLGWRNCH-3	Adjusting Wrench for 3" Adjustable Coupling	107.00
Z1200-CPLGWRNCH-4	Adjusting Wrench for 4" Adjustable Coupling	107.00
Z1200-FINFRAME-SJ	Finishing Frame for Siphon Jet System	84.00
Z1200-FINFRAME-B	Finishing Frame for Blowout Type System (Not for use with Z1201/ Z1202)	84.00
Z1200-FLRMNT-ADPT	Adapter Flange Assembly for Floor Mounted Back Outlet Fixture	158.00
Z1200-FT-EXT-2	2" Foot Extension Assembly	90.00
Z1200-FT-EXT-3	3" Foot Extension Assembly	90.00
Z1200-FT-EXT-4	4" Foot Extension Assembly	90.00
Z1200-NEOSEAL-GSKT-4	4" Bonded "Neo-Seal" Closet Gasket Kit (Previously Z1210-57)	84.00
Z1200-OFL	Offset Fitting - Left	765.00
Z1200-OFR	Offset Fitting - Right	765.00
Z1200-RI-GAUGE	Water Closet Rough-In Gauge	84.00
Z1200-RTRTFT-NUT	Retro-Fit Cap Nut	46.00
Z1200-SPLY-SPRT-UR	Flush Valve Supply Support for Urinals	90.00
Z1200-SPLY-SPRT-WC	Flush Valve Supply Support for Water Closets	90.00
Z1200-VP-WRNCH	Wrench for Vandal-Proof Screws	29.00
Z1200-VP-HRDWR-1/4	1/4" Vandal-Proof Cap Nuts (1 Set)	135.00
Z1200-VP-HRDWR-3/8	3/8" Vandal-Proof Cap Nuts (1 Set)	135.00
Z1200-VP-HRDWR-5/8	5/8" Vandal-Proof Cap Nuts (1 Set)	135.00

Z1200-SPLY-SPRT-WC

Z1200-SPLY-SPRT-UR

Z1200-SPLY-SPRT-WC shown on Z1201-N†

†Image showing old style carrier

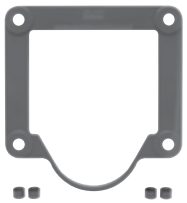

Z1200-FINFRAME-SJ

Z1200-FINFRAME-B

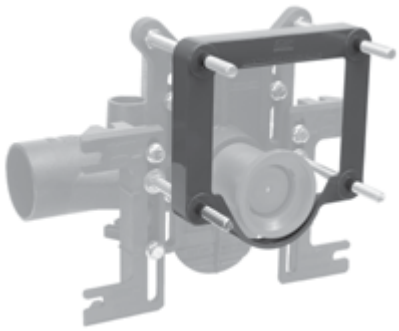

Z1200-FINFRAME-SJ shown on Z1201-N†

†Image showing old style carrier

This symbol denotes a product that is engineered to reduce installation and rework time.

For Additional System Tools See "Z1200 Carrier Tools and Accessories" on page 228

**Regularly furnished unless otherwise specified.*

For additional product information, please visit www.zurn.ca

Z1201-N EZCARRY® ADJUSTABLE HORIZONTAL HIGH PERFORMANCE SIPHON JET – NO-HUB SERIES

Patented

ENGINEERING SPECIFICATION

Zurn Z1201-N( ) EZCarry® horizontal siphon jet water closet carrier system features high performance waterway and ( ) no-hub connections. System includes Dura-Coated cast iron right-hand, left-hand, or double main fitting with hydro-mechanically optimized sweep and extended 2" [51 mm] vent, adjustable gasketed faceplate, floor mounted pre-fab slotted foot supports with top anchoring pre-fab support base, heavy-duty 1/2" [13 mm] rear anchor tie down, fixture bolts, trim, stud protectors, bonded Neo-Seal gasket, and corrosion resistant adjustable 3" [76 mm] diameter x 6" [152 mm] coupling with integral test cap designed to increase flow velocity and line carry. EZCarry system complies with the requirements of ASME A112.6.1M, up to a 500 lb static load rate.

NOTES

1. Cut 4" [102 mm] adjustable coupling minimum "P" dimension obtainable = 2" [51 mm]. EZ-Set™ coupling, minimum 'P' dimension obtainable = 4-1/4" [108 mm] or 2-1/16" [52 mm] for 12" [305 mm] NPT.
2. Feet bolted to floor using minimum 1/2" [13 mm] diameter anchors and back slots on carrier feet.
3. Rear anchor foot required for secure installation.

Z1201-NR4 (Single)

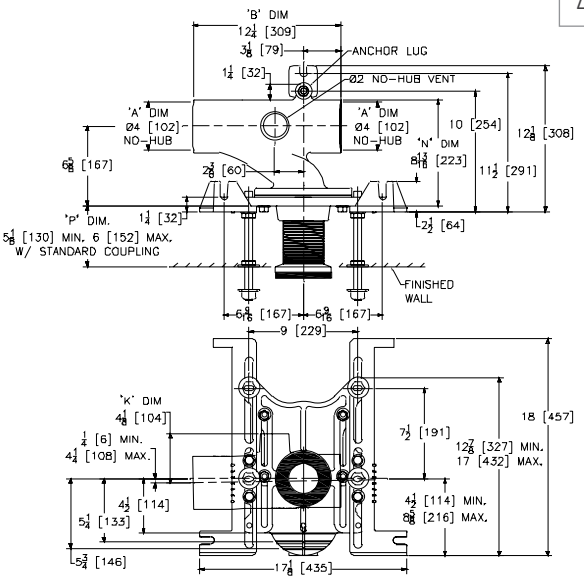

Z1201-ND4 (Double)

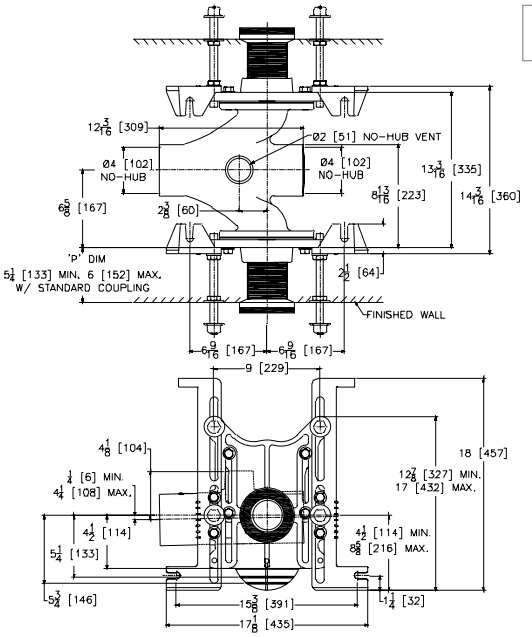

*Regularly furnished unless otherwise specified.

For additional product information, please visit www.zurn.ca

This symbol denotes a product that is engineered to reduce installation and rework time.

For Additional System Tools See "Z1200 Carrier Tools and Accessories" on page 228

Z1201-N EZCARRY® ADJUSTABLE HORIZONTAL HIGH PERFORMANCE SIPHON JET – NO-HUB SERIES

Product Number	Dimensions in inches [mm]				Approximate Weight lb [kg]
	A	B	K	N	
Z1201-NL3	3 [76]	11-1/2 [292]	4-7/16 [113]	7-3/8 [187]	55 [25]
Z1201-NR3					
Z1201-ND3				9-3/4 [248]	101 [46]
Z1201-NL4	4 [102]	12-1/4 [311]	4-1/8 [105]	8-13/16 [224]	58 [26]
Z1201-NR4					
Z1201-ND4					104 [47]

PREFIXES	DESCRIPTION		SINGLE	DOUBLE
Z1201*	D.C.C.I. System with 4″ Adjustable Coupling		Combine with Fitting Type for Pricing	
ZQ1201	D.C.C.I. System with NPT Faceplate Non-Adjustable Coupling			
FITTING TYPE				
-NL3	3″ No-Hub Left-Hand Inlet with Flow to Right		1,100.00	-
-NR3	3″ No-Hub Right-Hand Inlet with Flow to Left		1,100.00	-
-ND3	3″ No-Hub Back-to-Back Inlet (Double)		-	1,900.00
-NL4	4″ No-Hub Left-Hand Inlet with Flow to Right		1,100.00	-
-NR4	4″ No-Hub Right-Hand Inlet with Flow to Left		1,100.00	-
-ND4	4″ No-Hub Back-to-Back Inlet (Double)		-	1,900.00
SUFFIXES				ADD
–A	Auxiliary Support Assembly (Required For 'P' Dim. Greater than 18″)		737.00	1,471.00
–CC	Corrosion Resistant Cast Iron Coupling (2-1/4″ to 12″)		N/C	N/C
–CE	EZ-SET™ Coupling (6″, 12″ & 18″)	6″	141.00	282.00
		12″	237.00	473.00
		18″	539.00	1,078.00
–CL	Custom Length Standard Coupling with Integral Test Cap (Specify Length 6″ or 12″)		N/C	N/C
–CS	2-1/4″ Polymer Coupling with Integral Test Cap		N/C	N/C
–G	Galvanized Cast Iron		713.00	1,419.00
–JC	2″ Auxiliary Inlet with 1/8″ Bend (1NL4, 1NR4 Only)		360.00	-
–M	Auxiliary Foot Support (Required For 'P' Dim. 7″ - 18″)		322.00	641.00
–RYK17	One Piece Unistrut Pre-Fab Foot Support		55.00	108.00
–VP	Vandal-Proof Trim		187.00	374.00
–45	Finishing Frame for Siphon Jet System		73.00	145.00
–50	Flush Valve Supply Support for Water Closet		77.00	152.00
				DEDUCT
–F	Floor Mounted, Back Outlet Fixture Support		-158.00	-314.00

Z1200-EZCUTGUIDE†

†Image showing old style carrier

Z1200-CPLGWRNCH-3

This symbol denotes a product that is engineered to reduce installation and rework time.

For Additional System Tools See "Z1200 Carrier Tools and Accessories" on page 228

**Regularly furnished unless otherwise specified.*

For additional product information, please visit www.zurn.ca

Z1201-H EZCARRY® ADJUSTABLE HORIZONTAL HIGH PERFORMANCE SIPHON JET – HUB AND SPIGOT SERIES

Patented

ENGINEERING SPECIFICATION

Zurn Z1201-H( ) EZCarry® horizontal siphon jet water closet carrier system features high performance waterway and 4" [102 mm] hub and spigot connections. System includes Dura-Coated cast iron right-hand, left-hand, or double main fitting with hydro-mechanically optimized sweep and extended 2" [51 mm] vent, adjustable gasketed faceplate, floor mounted pre-fab slotted foot supports with top anchoring pre-fab support base, heavy-duty 1/2" [13 mm] rear anchor tie down, fixture bolts, trim, stud protectors, bonded Neo-Seal gasket, and corrosion resistant adjustable 3" [76 mm] diameter x 6" [152 mm] coupling with integral test cap designed to increase flow velocity and line carry. EZCarry® system complies with the requirements of ASME A112.6.1M, up to a 500 lb static load rating.

NOTES

1. Cut 4" [102 mm] adjustable coupling minimum "P" dimension obtainable = 2" [51 mm]. EZ-Set™ coupling, minimum 'P' dimension obtainable = 4-1/4" [108 mm] or 2-1/16" [52 mm] for 12" [305 mm] NPT.
2. Feet bolted to floor using minimum 1/2" [13 mm] diameter anchors and back slots on carrier feet.
3. Rear anchor foot required for secure installation.

Z1201-HR4 (Single)

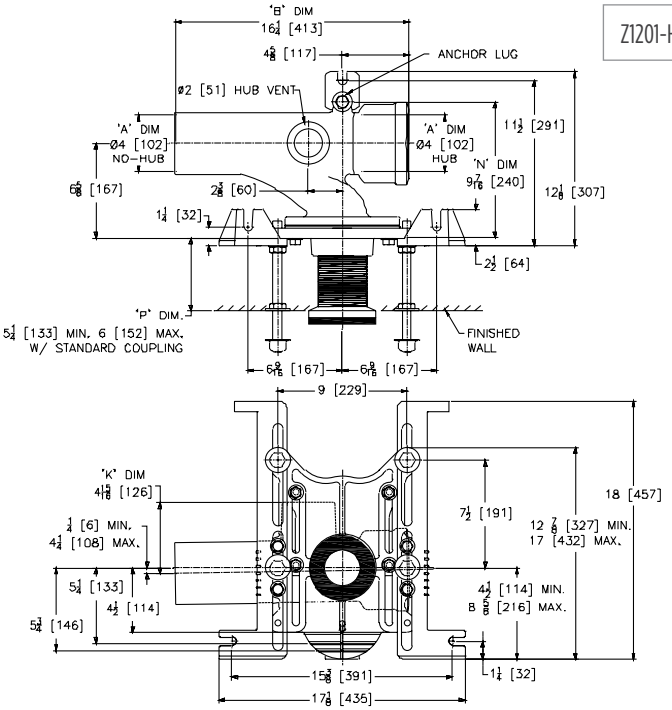

Z1201-HD4 (Double)

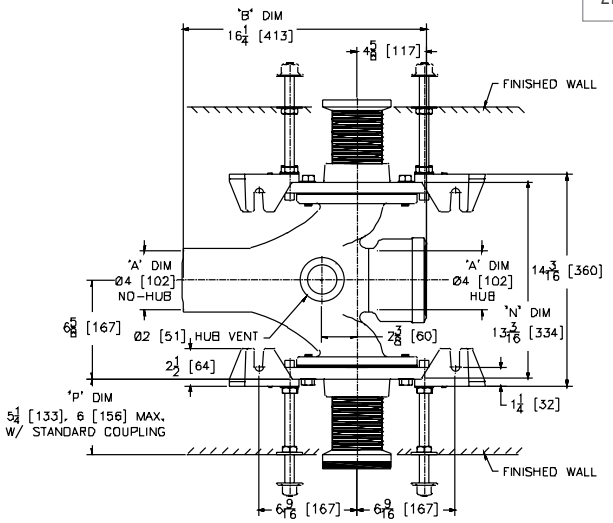

*Regularly furnished unless otherwise specified.

For additional product information, please visit www.zurn.ca

This symbol denotes a product that is engineered to reduce installation and rework time.

For Additional System Tools See "Z1200 Carrier Tools and Accessories" on page 228

Z1201-H EZCARRY® ADJUSTABLE HORIZONTAL HIGH PERFORMANCE SIPHON JET – HUB AND SPIGOT SERIES

Product Number	Dimensions in inches [mm]				Approximate Weight lb [kg]
	A	B	K	N	
Z1201-HL4	4 [102]	13-3/4 [349]	4-5/16 [110]	9-1/2 241]	64 [29]
Z1201-HR4					
Z1201-HD4			6-1/8 [156]	13-3/16 [351]	109 [49]

PREFIXES	DESCRIPTION		SINGLE	DOUBLE
Z1201*	D.C.C.I. System with 4″ Adjustable Coupling		Combine with Fitting Type for Pricing	
ZQ1201	D.C.C.I. System with NPT Faceplate, Non-Adjustable Coupling			
FITTING TYPE				
-HL4	4″ Hub & Spigot, Left-Hand Inlet with Flow to Right		1,100.00	-
-HR4	4″ Hub & Spigot, Right-Hand Inlet with Flow to Left		1,100.00	-
-HD4	4″ Hub & Spigot Back-to-Back Inlet (Double)		-	1,900.00
SUFFIXES				**ADD**
–A	Auxiliary Support Assembly (Required For 'P' Dim. Greater than 18″)		737.00	1,471.00
–CC	Corrosion Resistant Cast Iron Coupling (2-1/4″ to 12″)		N/C	N/C
–CE	EZ-SET™ Coupling (6″, 12″ & 18″)	6″	141.00	282.00
		12″	237.00	473.00
		18″	539.00	1,078.00
–CL	Custom Length Standard Coupling with Integral Test Cap (Specify Length 6″ or 12″)		N/C	N/C
–CS	2-1/4″ Polymer Coupling with Integral Test Cap		N/C	N/C
–G	Galvanized Cast Iron		713.00	1,419.00
–M	Auxiliary Foot Support (Required For 'P' Dim. 7″ thru 18″)		322.00	641.00
–RYK17	One Piece Unistrut Pre-Fab Foot Support		55.00	108.00
–VP	Vandal-Proof Trim		187.00	374.00
–45	Finishing Frame for Siphon Jet System		73.00	145.00
–50	Flush Valve Supply Support for Water Closet		77.00	152.00
				DEDUCT
-F	Floor Mounted, Back Outlet Fixture Support		-158.00	-314.00

Z1200-EZCUTGUIDE†

†Image showing old style carrier

Z1200-CPLGWRNCH-3

This symbol denotes a product that is engineered to reduce installation and rework time.

For Additional System Tools See "Z1200 Carrier Tools and Accessories" on page 228

**Regularly furnished unless otherwise specified.*

For additional product information, please visit www.zurn.ca

Z1201-N-XB EZCARRY® BARIATRIC CARRIER – 1000 LB ADJUSTABLE HORIZONTAL SIPHON JET – NO-HUB SERIES

Patented

ENGINEERING SPECIFICATION

Zurn Z1201-N( )-XB EZCarry® bariatric horizontal siphon jet water closet carrier system features high performance Dura-Coated cast iron main fitting with hydromechanically optimized sweep, 4" [102 mm] no-hub connections, and extended 2" [51 mm] vent. Corrosion resistant adjustable cast iron coupling is designed to increase flow velocity and line carry. Labor saving Neo-Seal bonded gasket optimizes flow performance, while reducing installation steps. Complete system includes an adjustable, gasketed faceplate, floor mounted foot supports, rigid support frame assembly, extra heavy-duty 1/2" [13 mm] rear anchor tie down, fixture bolts, trim, and stud protectors. EZCarry® XB system complies with all applicable requirements of ASME A112.6.1M up to a 1000 lb maximum static load.

NOTES

1. Cut 4" [102 mm] adjustable coupling minimum 'P' dimension obtainable = 3" [76 mm].
2. Feet bolted to floor using minimum 1/2" [13 mm] diameter anchors.
3. Rear anchor assembly required for secure installation.
4. Floor anchors must each be able to withstand a pull-out force of 748 lb.
5. Pull-out forces are calculated values with standard coupling assembly. No safety factor has been applied. See Form #C38 for more information.

Product Number	Approximate Weight lb [kg]
Z1201-NL4-XB	100 [45]
Z1201-NR4-XB	
Z1201-ND4-XB	173 [78]

PREFIXES	DESCRIPTION	SINGLE	DOUBLE
Z1201*	D.C.C.I. System with 4" Adjustable Coupling	Combine with Fitting Type for Pricing	
FITTING TYPE			
-NL4-XB	4" No-Hub, Left-Hand Inlet with Flow to Right	2,175.00	-
-NR4-XB	4" No-Hub, Right-Hand Inlet with Flow to Left	2,175.00	-
-ND4-XB	4" No-Hub, Back-to-Back Inlet (Double)	-	3,953.00
SUFFIXES			**ADD**
–CC	Corrosion Resistant Cast Iron Coupling (2-1/4" thru 12")	N/C	N/C
–G	Galvanized Cast Iron	713.00	1,419.00
–JC	2" Auxiliary Inlet with 1/8" Bend	360.00	-
–VP	Vandal-Proof Trim	187.00	374.00
–50	Flush Valve Supply Support for Water Closet	77.00	152.00

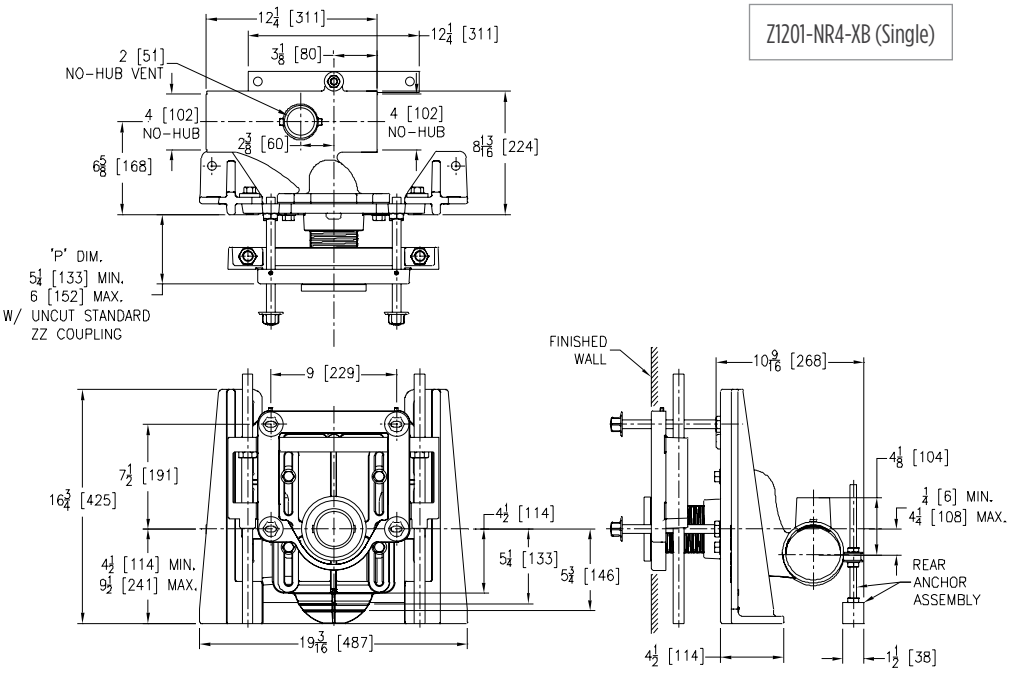

*Regularly furnished unless otherwise specified.

For additional product information, please visit www.zurn.ca

This symbol denotes a product that is engineered to reduce installation and rework time.

For Additional System Tools See "Z1200 Carrier Tools and Accessories" on page 228

Z1201-N-XH EZCARRY® EXTRA HEAVY-DUTY 750 LB ADJUSTABLE HORIZONTAL SIPHON JET – NO-HUB SERIES

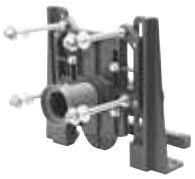

Patented

ENGINEERING SPECIFICATION

Zurn Z1201-N( )-XH EZCarry® extra heavy-duty horizontal siphon jet water closet carrier system features high performance Dura-Coated cast iron main fitting with hydro-mechanically optimized sweep, 4" [102 mm] no-hub connections, and extended 2" [51 mm] vent. Corrosion resistant adjustable 3" [76 mm] diameter x 6" [152 mm] coupling with integral test cap is designed to increase flow velocity and line carry. Labor saving Neo-Seal bonded gasket optimizes flow performance, while reducing installation steps. Complete system includes an adjustable, gasketed faceplate, floor mounted foot supports, extra heavy-duty 1/2" [13 mm] rear anchor tie down, fixture bolts, trim, and stud protectors. EZCarry® XH system complies with all applicable requirements of ASME A112.6.1M up to a 750 lb maximum static load.

NOTES

1. Cut 4" [102 mm] adjustable coupling minimum 'P' dimension obtainable = 2" [51 mm]. Cut ZQ coupling minimum 'P' dimension obtainable = 5" [127 mm].
2. Feet bolted to floor using minimum 1/2" [13 mm] diameter anchors.
3. Rear anchor assembly required for secure installation.
4. Floor anchors must each be able to withstand a pull-out force of 820 lb.
5. Pull-out forces are calculated values with standard coupling assembly. No safety factor has been applied. See Form #C38 for more information.

Product Number	Approximate Weight lb [kg]
Z1201-NL3-XH	81 [37]
Z1201-NR3-XH	
Z1201-ND3-XH	138 [63]
Z1201-NL4-XH	84 [38]
Z1201-NR4-XH	
Z1201-ND4-XH	142 [64]

PREFIXES		SINGLE	DOUBLE
Z1201*	D.C.C.I. System with 4" Adjustable Coupling	Combine with Fitting Type for Pricing	
ZQ1201	D.C.C.I. System with NPT Faceplate, Non-Adjustable Coupling		
FITTING TYPE			
-NL3-XH	3" No-Hub Left-Hand Inlet with Flow to Right	2,122.00	-
-NR3-XH	3" No-Hub Right-Hand Inlet with Flow to Left	2,122.00	-
-ND3-XH	3" No-Hub Back-to-Back Inlet (Double)	-	3,754.00
-NL4-XH	4" No-Hub Left-Hand Inlet with Flow to Right	1,995.00	-
-NR4-XH	4" No-Hub Right-Hand Inlet with Flow to Left	1,995.00	-
-ND4-XH	4" No-Hub Back-to-Back Inlet (Double)	-	3,624.00
SUFFIXES			ADD
–CC	Corrosion Resistant Cast Iron Coupling (2-1/4" thru 12")	50.00	98.00
–CE	EZ-SET™ Coupling (6", 12" & 18") 6"	141.00	282.00
	12"	237.00	473.00
	18"	539.00	1,078.00
–CL	Custom Length Standard Coupling with Integral Test Cap (Specify length 6" or 12")	90.00	178.00
–CS	2-1/4" Polymer Coupling with Integral Test Cap	N/C	N/C
–G	Galvanized Cast Iron	713.00	1,419.00
–JC	2" Auxiliary Inlet with 1/8" Bend	360.00	-
–VP	Vandal-Proof Trim	187.00	374.00
◷ –45	Finishing Frame for Siphon Jet System	72.00	142.00
◷ –50	Flush Valve Supply Support for Water Closet	77.00	152.00

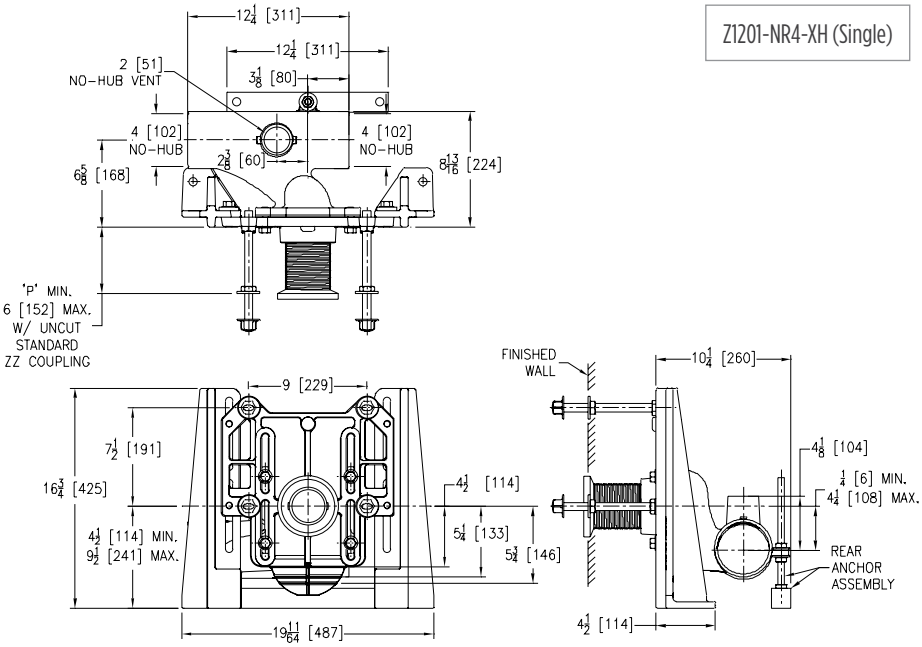

Z1201-NR4-XH (Single)

◷ *This symbol denotes a product that is engineered to reduce installation and rework time.*

For Additional System Tools See "Z1200 Carrier Tools and Accessories" on page 228

**Regularly furnished unless otherwise specified.*

For additional product information, please visit www.zurn.ca

⏲ ZE1201-N EZCARRY® ADJUSTABLE HORIZONTAL SIPHON JET WITH ELONGATED FITTING – NO-HUB SERIES

Patent Pending

ENGINEERING SPECIFICATION

Zurn ZE1201-N( ) EZCarry® horizontal siphon jet water closet carrier system features high performance Dura-Coated cast iron main fitting with hydromechanically optimized sweep, 4" [102 mm] no-hub connections, 38" [965 mm] barrel for stall-to-stall direct connection, and extended 2" [51 mm] vent. Corrosion resistant adjustable 3" [76 mm] diameter x 6" [152 mm] coupling with integral test cap is designed to increase flow velocity and line carry. Labor saving Neo-Seal bonded gasket optimizes flow performance, while reducing installation steps. Complete system includes an adjustable, gasketed faceplate, floor mounted foot supports with top anchoring pre-fab support base, heavy-duty 1/2" [13 mm] rear anchor tie down, fixture bolts, trim, and stud protectors. EZCarry® narrow wall system complies with all applicable requirements of ASME A112.6.1M up to a 500 lb maximum static load.

NOTES

1. Cut 4" [102 mm] adjustable coupling minimum 'P' dimension obtainable = 2" [51 mm]. EZ-Set™ coupling, minimum 'P' dimension obtainable = 4-1/4" [108 mm] or 2-1/16" [52 mm] for 12" [305 mm] NPT.
2. Feet bolted to floor using minimum 1/2" [13 mm] diameter anchors.
3. Rear anchor foot required for secure installation.

ZE1201-NR4 (Single)

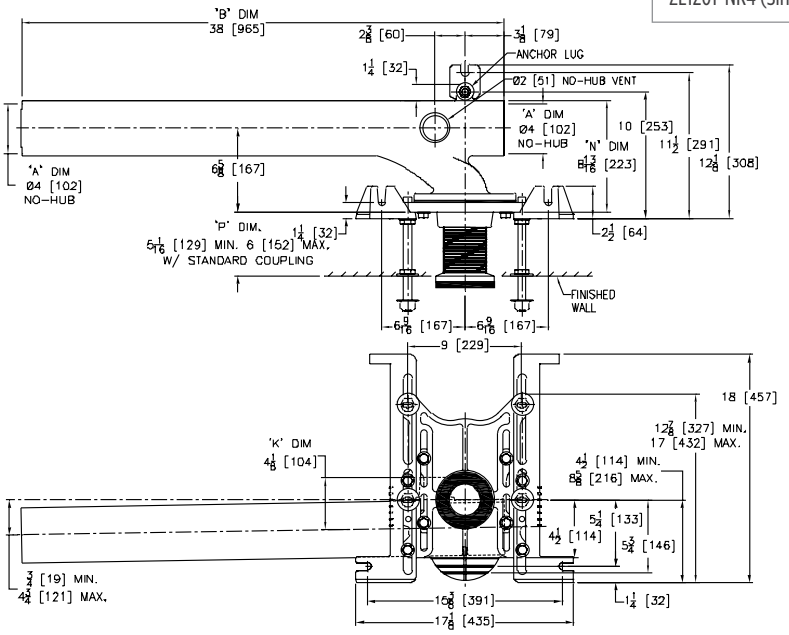

ZE1201-ND4 (Double)

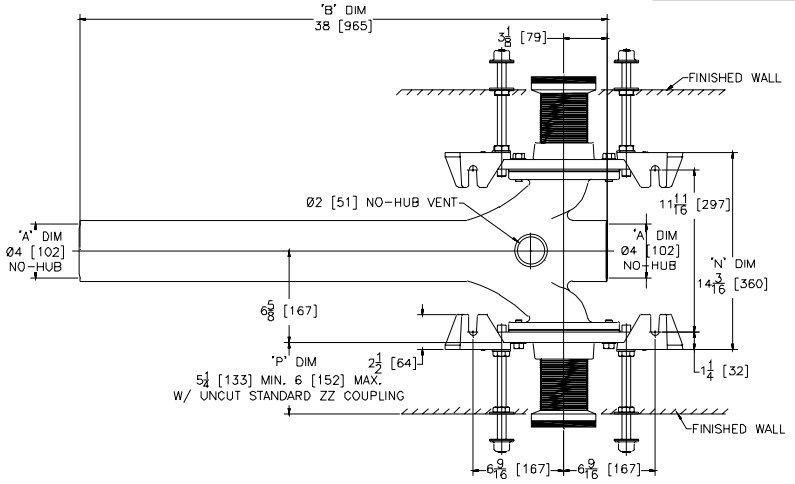

*Regularly furnished unless otherwise specified.

For additional product information, please visit www.zurn.ca

⏲ This symbol denotes a product that is engineered to reduce installation and rework time.

For Additional System Tools See "Z1200 Carrier Tools and Accessories" on page 228

⏲ ZE1201-N EZCARRY® ADJUSTABLE HORIZONTAL SIPHON JET WITH ELONGATED FITTING – NO-HUB SERIES

Product Number	Approximate Weight lb [kg]
ZE1201-NL4	97 [44]
ZE1201-NR4	
ZE1201-ND4	119 [54]

PREFIXES	DESCRIPTION		SINGLE	DOUBLE
ZE1201*	D.C.C.I. Elongated Fitting System with 4″ Adjustable Coupling		Combine with Fitting Type for Pricing	
ZQE1201	D.C.C.I. System with NPT Faceplate, Non-Adjustable Coupling			
FITTING TYPE				
-NL4	4″ No-Hub Left-Hand Inlet with Flow to Right		1,588.00	-
-NR4	4″ No-Hub Right-Hand Inlet with Flow to Left		1,588.00	-
-ND4	4″ No-Hub Back-to-Back Inlet (Double)		-	2,757.00
SUFFIXES				ADD
–A	Auxiliary Support Assembly (Required For 'P' Dim. Greater than 18″)		457.00	1,471.00
–CC	Corrosion Resistant Cast Iron Coupling (2-1/4″ thru 12″)		50.00	98.00
–CE	EZ-SET™ Coupling (6″, 12″ & 18″)	6″	141.00	282.00
		12″	237.00	473.00
		18″	539.00	1,078.00
–CL	Custom Length Standard Coupling with Integral Test Cap (Specify Length 6″ or 12″)		90.00	178.00
⏲ –CS	2-1/4″ Polymer Coupling with Integral Test Cap		N/C	N/C
–G	Galvanized Cast Iron		713.00	1,419.00
–M	Auxiliary Foot Support (Required For 'P' Dim. 7″ thru 18″)		277.00	638.00
⏲ –RYK17	One Piece Unistrut Pre-Fab Foot Support		55.00	108.00
–VP	Vandal-Proof Trim		187.00	374.00
⏲ –45	Finishing Frame for Siphon Jet System		73.00	145.00
⏲ –50	Flush Valve Supply Support for Water Closet		77.00	152.00
				DEDUCT
-F	Floor Mounted, Back Outlet Fixture Support		-158.00	-314.00

Z1200-CPLGWRNCH-3

⏲ This symbol denotes a product that is engineered to reduce installation and rework time.

For Additional System Tools See "Z1200 Carrier Tools and Accessories" on page 228

**Regularly furnished unless otherwise specified.*

For additional product information, please visit www.zurn.ca

ZE1201-H EZCARRY® ADJUSTABLE HORIZONTAL SIPHON JET WITH ELONGATED FITTING – HUB AND SPIGOT SERIES

Patent Pending

ENGINEERING SPECIFICATION

Zurn ZE1201-H( ) EZCarry® horizontal siphon jet water closet carrier system, with high performance Dura-Coated cast iron main fitting with hydromechanically optimized sweeps, 4" [102 mm] Hub & Spigot connections, 38" [965 mm] barrel for stall to stall direct connection, and extended 2" [51 mm] vent. Corrosion resistant adjustable 3" [76 mm] diameter x 6" [152 mm] coupling with integral test cap, designed to increase flow velocity and line carry, and labor saving Neo-Seal bonded gasket optimize flow performance, while reducing installation steps. Complete system includes an adjustable, gasketed faceplate, floor mounted foot supports with top anchoring pre-fab support base, heavy-duty 1/2" [13 mm] rear anchor tie down, fixture bolts, trim, and stud protectors. EZCarry® narrow wall system complies with all applicable requirements of ASME A112.6.1M up to a 500 lb. maximum static load.

NOTES

1. 4" adjustable coupling minimum "P" dimension obtainable = 2" [51 mm]. EZ-Set™ coupling, minimum 'P' dimension obtainable = 4-1/4" [108 mm] or 2-1/16" [52 mm] for 12" [305 mm] NPT.
2. Feet bolted to floor using minimum 1/2" [13 mm] diameter anchors.
3. Rear anchor foot required for secure installation.

ZE1201-HR4 (Single)

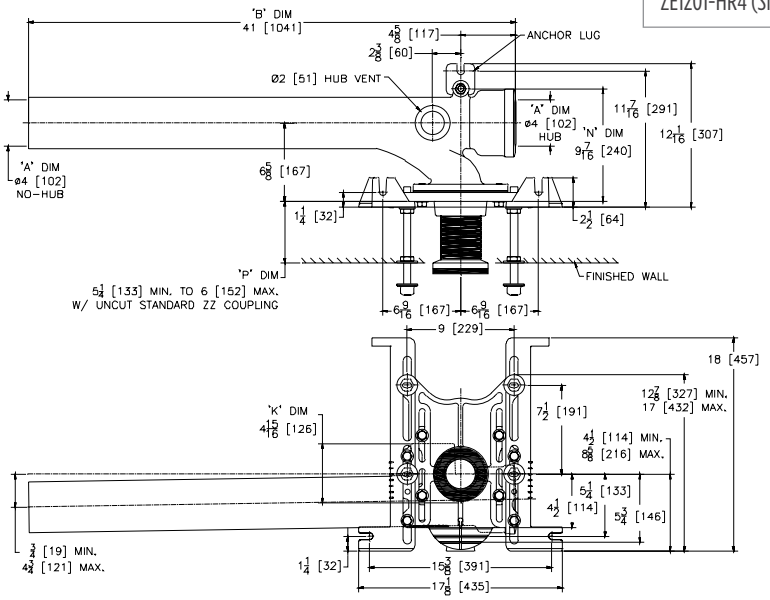

ZE1201-HD4 (Double)

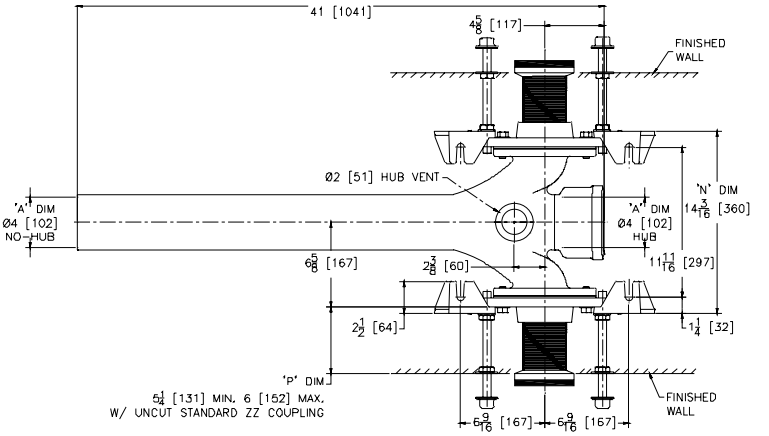

*Regularly furnished unless otherwise specified.

For additional product information, please visit www.zurn.ca

This symbol denotes a product that is engineered to reduce installation and rework time.

For Additional System Tools See "Z1200 Carrier Tools and Accessories" on page 228

⏲ ZE1201-H EZCARRY® ADJUSTABLE HORIZONTAL SIPHON JET WITH ELONGATED FITTING – HUB AND SPIGOT SERIES

Product Number	Approximate Weight lb [kg]
ZE1201-HL4	99 [45]
ZE1201-HR4	
ZE1201-HD4	125 [57]

Z1200-CPLGWRNCH-3

PREFIXES	DESCRIPTION		SINGLE	DOUBLE
ZE1201*	D.C.C.I. System with 4″ Adjustable Coupling		Combine with Fitting Type for Pricing	
ZQE1201	D.C.C.I. System with NPT Faceplate, Non-Adjustable Coupling			
FITTING TYPE				
-HL4	4″ Caulk, Right-Hand Inlet with Flow to Left		1,588.00	-
-HR4	4″ Caulk, Left-Hand Inlet with Flow to Right		1,588.00	-
-HD4	4″ Caulk, Back-to-Back Inlet (Double)		-	2,757.00
SUFFIXES				**ADD**
–A	Auxiliary Support Assembly (Required For 'P' Dim. Greater than 18″)		737.00	1,471.00
–CC	Corrosion Resistant Cast Iron Coupling (2-1/4″ thru 12″)		50.00	98.00
–CE	EZ-SET™ Coupling (6″, 12″ & 18″)	6″	141.00	282.00
		12″	237.00	473.00
		18″	539.00	1,078.00
–CL	Custom Length Standard Coupling with Integral Test Cap (Specify Length 6″ or 12″)		90.00	178.00
⏲ –CS	2-1/4″ Polymer Coupling with Integral Test Cap		N/C	N/C
–G	Galvanized Cast Iron		713.00	1,419.00
–M	Auxiliary Foot Support (Required For 'P' Dim. 7″ thru 18″)		277.00	638.00
⏲ –RYK17	One Piece Unistrut Pre-Fab Foot Support		55.00	108.00
–VP	Vandal-Proof Trim		187.00	374.00
⏲ –45	Finishing Frame for Siphon Jet System		73.00	145.00
⏲ –50	Flush Valve Supply Support for Water Closet		77.00	152.00
				DEDUCT
-F	Floor Mounted, Back Outlet Fixture Support		N/C	N/C

⏲ This symbol denotes a product that is engineered to reduce installation and rework time.

For Additional System Tools See "Z1200 Carrier Tools and Accessories" on page 228

**Regularly furnished unless otherwise specified.*

For additional product information, please visit www.zurn.ca

⏲ ZF1201-N EZCARRY® HORIZONTAL SIPHON JET ONE-PIECE CARRIER – NO-HUB SERIES

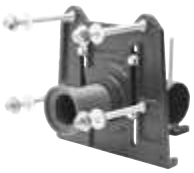

Patent Pending

ENGINEERING SPECIFICATION

Zurn ZF1201-N( ) EZCarry® one-piece combination floor mounted foot/faceplate horizontal siphon jet water closet carrier system, supplied for ( ) rough-in height, features high performance Dura-Coated cast iron main fitting with hydro-mechanically optimized sweep, 4" [102 mm] no-hub connections, and extended 2" [51 mm] vent. Corrosion resistant adjustable 3" [76 mm] diameter x 6" [152 mm] coupling with integral test cap is designed to increase flow velocity and line carry. Labor saving Neo-Seal bonded gasket optimize flow performance, while reducing installation steps. Complete system includes one-piece combination foot/faceplate, heavy-duty 1/2" [13 mm] rear anchor tie down, fixture bolts, trim and stud protectors. EZCarry® one-piece combination floor mounted foot/faceplate system complies with all applicable requirements of ASME A112.6.1M up to a 500 lb maximum static load.

NOTES

1. Cut 4" [102 mm] adjustable coupling minimum "P" dimension obtainable = 2" [51 mm]. EZ-Set™ coupling, minimum 'P' dimension obtainable = 4-1/4" [108 mm] or 2-1/16" [52 mm] for 12" [305 mm] NPT.
2. Faceplate bolted to floor using minimum 1/2" [13 mm] diameter anchors.
3. Rear anchor assembly required for secure installation.

Product Number	Dimensions in inches [mm] A	Dimensions in inches [mm] B	Approximate Weight lb [kg]
ZF1201-NL4-F55	5-1/2 [140]	13-7/8 [352]	72 [33]
ZF1201-NR4-F55			
ZF1201-ND4-F55			93 [42]
ZF1201-NL4-F75	7-1/2 [191]	15-7/8 [403]	76 [34]
ZF1201-NR4-F75			
ZF1201-ND4-F75			100 [45]

PREFIXES	DESCRIPTION	SINGLE	DOUBLE
ZF1201*	D.C.C.I. System with 4" Adjustable Coupling	Combine with Fitting Type for Pricing	
ZQF1201	D.C.C.I. System with NPT Faceplate Non-Adjustable Coupling		
FITTING TYPE			
-NL4-F55	4" No-Hub Left-Hand Inlet with Flow to Right w/ 5-1/2" Non-Adjustable Rough-In Height	1,578.00	-
-NR4-F55	4" No-Hub Right Hand Inlet with Flow to Left w/ 5-1/2" Non-Adjustable Rough-In Height	1,578.00	-
-ND4-F55	4" No-Hub Back-to-back Double Inlet with 5-1/2" Non-Adjustable Rough-In Height	-	2,953.00
-NL4-F75	4" No-Hub Left Hand Inlet with Flow to Right w/ 7-1/2" Non-Adjustable Rough-In Height	1,578.00	-
-NR4-F75	4" No-Hub Right Hand Inlet with Flow to Left w/ 7-1/2" Non-Adjustable Rough-In Height	1,578.00	-
-ND4-F75	4" No-Hub Back-to-back Double Inlet with 7-1/2" Non-Adjustable Rough-In Height	-	2,953.00
SUFFIXES			**ADD**
–A	Auxiliary Support Assembly (Required For 'P' Dim. Greater than 18")	861.00	1,715.00
–CC	Corrosion Resistant Cast Iron Coupling (2-1/4" thru 12")	50.00	98.00
–CE	EZ-SET™ Coupling (6", 12" & 18") 6"	141.00	282.00
	12"	237.00	473.00
	18"	539.00	1,078.00
–CL	Custom Length Standard Coupling with Integral Test Cap (Specify Length 6" or 12")	104.00	204.00
⏲ –CS	2-1/4" Polymer Coupling with Integral Test Cap	N/C	N/C
–G	Galvanized Cast Iron	928.00	1,848.00
–JC	2" Auxiliary Inlet with 1/8" Bend	360.00	-
–M	Auxiliary Foot Support (Required For 'P' Dim. 10" thru 18")	326.00	644.00
–VP	Vandal-Proof Trim	135.00	267.00
⏲ –45	Finishing Frame for Siphon Jet System	84.00	164.00
⏲ –50	Flush Valve Supply Support for Water Closet	90.00	175.00
			DEDUCT
-F	Floor Mounted, Back Outlet Fixture Support	N/C	N/C

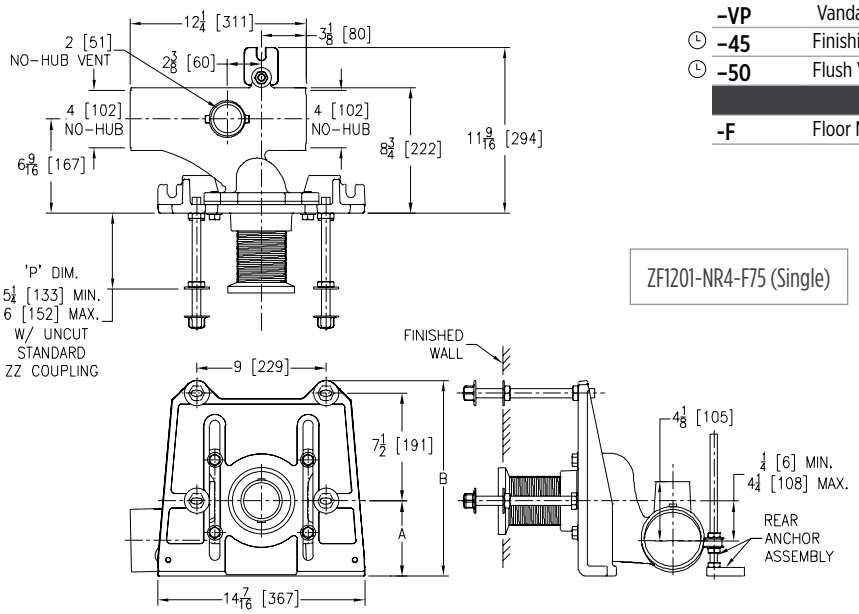

ZF1201-NR4-F75 (Single)

*Regularly furnished unless otherwise specified.

For additional product information, please visit www.zurn.ca

⏲ *This symbol denotes a product that is engineered to reduce installation and rework time.*

For Additional System Tools See "Z1200 Carrier Tools and Accessories" on page 228

⏲ ZN1201-N EZCARRY® ADJUSTABLE HORIZONTAL SIPHON JET – NO-HUB NARROW WALL SYSTEM (9-3/8" DEPTH FRONT TO BACK)

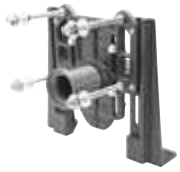

Patent Pending

ENGINEERING SPECIFICATION

Zurn ZN1201-N( )4 EZCarry® narrow wall horizontal siphon jet water closet carrier system features high performance Dura-Coated cast iron main fitting with hydro-mechanically optimized sweep, 4" [102 mm] no-hub connections, and extended 2" [51 mm] vent. Corrosion resistant adjustable 3" [76 mm] diameter x 6" [152 mm] coupling with integral test cap is designed to increase flow velocity and line carry. Labor saving Neo-Seal bonded gasket optimize flow performance while reducing installation steps. Complete system includes an adjustable, gasketed faceplate, floor mounted foot supports, fixture bolts, trim, and stud protectors. EZCarry® narrow wall system complies with all applicable requirements of ASME A112.6.1M up to a 500 lb maximum static load.

NOTES

1. Cut 4" [102 mm] adjustable coupling minimum 'P' dimension obtainable = 1-1/4" [32 mm].
2. Carrier floor anchors must each be able to withstand a pull-out force of 1741 lb.
3. Pull-out forces are calculated values with standard coupling assembly. No safety factor has been applied. See Form #C38 for more information.

Product Number	Approximate Weight lb [kg]
ZN1201-NL4	75 [34]
ZN1201-NR4	
ZN1201-ND4	140 [64]

PREFIXES	DESCRIPTION	SINGLE	DOUBLE
ZN1201*	D.C.C.I. System with 4" Adjustable Coupling	**Combine with Fitting Type for Pricing**	
FITTING TYPE			
-NL4	4" No-Hub Left-Hand Inlet w/Flow to Right for Narrow Wall	**1,100.00**	**-**
-NR4	4" No-Hub Right-Hand Inlet w/Flow to Left for Narrow Wall	**1,100.00**	**-**
-ND4	4" No-Hub Back-to-Back Inlet (Double for Narrow Wall)	**-**	**1,900.00**
SUFFIXES			**ADD**
–CC	Corrosion Resistant Cast Iron Coupling (2-1/4" thru 12")	**53.00**	**104.00**
⏲ **–CS**	2-1/4" Polymer Coupling with Integral Test Cap	**N/C**	**N/C**
–G	Galvanized Cast Iron	**928.00**	**1,848.00**
–JC	2" Auxiliary Inlet with 1/8" Bend	**360.00**	**721.00**
–VP	Vandal-Proof Trim	**187.00**	**374.00**
⏲ **–50**	Flush Valve Supply Support for Water Closet	**77.00**	**152.00**

ZN1201-NR4 (Single)

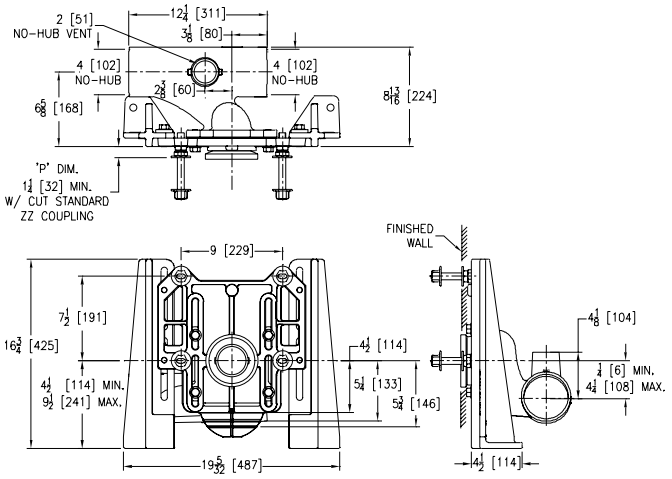

ZN1201-ND4 (Double)

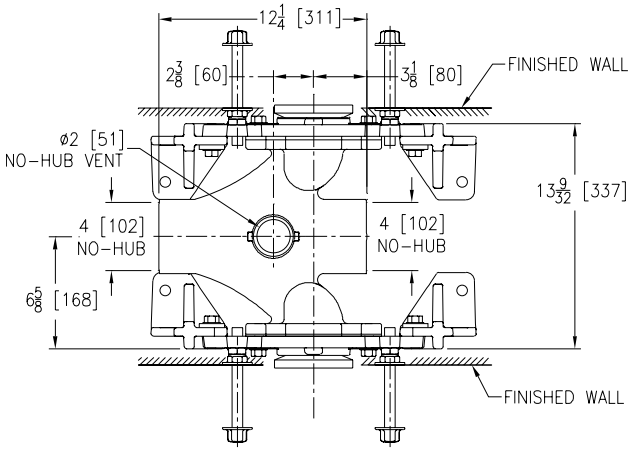

⏲ *This symbol denotes a product that is engineered to reduce installation and rework time.*

For Additional System Tools See "Z1200 Carrier Tools and Accessories" on page 228

**Regularly furnished unless otherwise specified.*

For additional product information, please visit www.zurn.ca

Z1202-N EZCARRY® ADJUSTABLE VERTICAL HIGH PERFORMANCE SIPHON JET – NO-HUB SERIES

Patented

ENGINEERING SPECIFICATION

Zurn Z1202-( )N EZCarry® vertical siphon jet water closet carrier system features high performance waterway and 4" [102 mm] no-hub connections. System includes Dura-Coated cast iron right-hand, left-hand, or double main fitting with hydro-mechanically optimized sweep and extended 2" vent, adjustable gasketed faceplate, floor mounted pre-fab slotted foot supports with top anchoring pre-fab support base, heavy-duty 1/2" [13 mm] rear anchor tie down, fixture bolts, trim, stud protectors, bonded Neo-Seal gasket, and corrosion resistant adjustable 3" [76 mm] diameter x 6" [152 mm] coupling with integral test cap designed to increase flow velocity and line carry. EZCarry system complies with the requirements of ASME A112.6.1M, up to a 500 lb static load rating.

NOTES

1. Cut 4" [102 mm] adjustable coupling minimum "P" dimension obtainable = 2" [51 mm]. EZ-Set™ coupling, minimum 'P' dimension obtainable = 4-1/4" [108 mm] or 2-1/16" [52 mm] for 12" [305 mm] NPT.
2. Feet bolted to floor using minimum 1/2" [13 mm] diameter anchors and back slots on carrier feet.
3. Rear anchor foot required for secure installation.
4. 2" [51 mm] no-hub vent connection regularly furnished on right-hand side. Left-hand available when specified (Suffix –VL).
5. Auxiliary inlet available right (-JR) or left (-JL) or both sides (-JJ) when specified.

Z1202-N4 (Single)

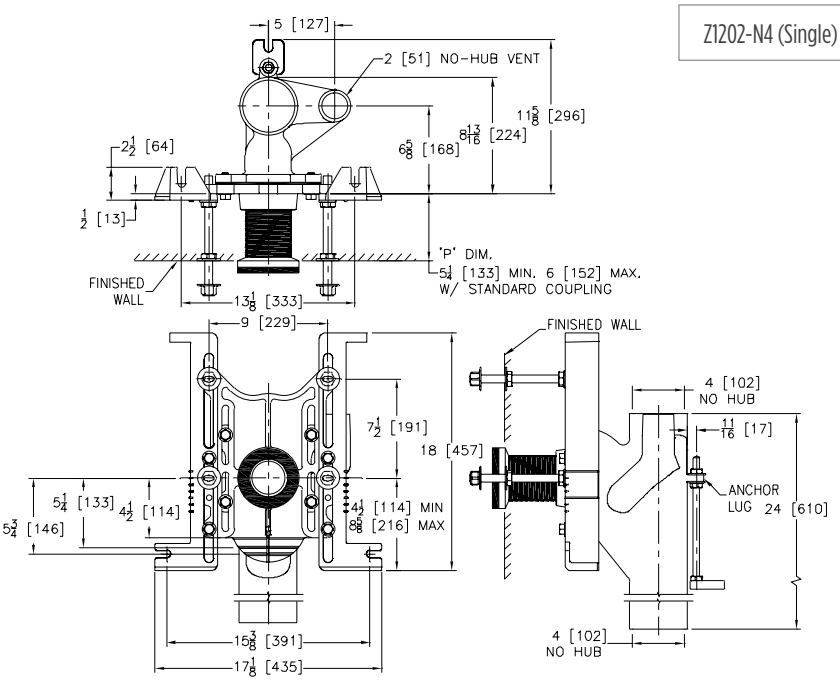

Z1202-ND4 (Double)

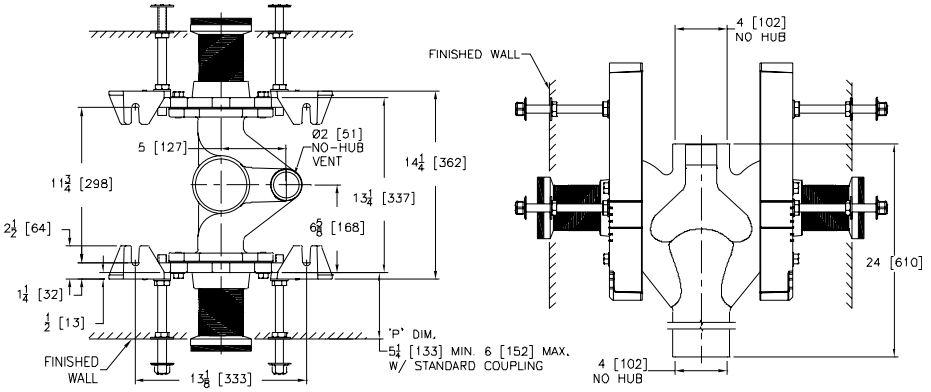

*Regularly furnished unless otherwise specified.

For additional product information, please visit www.zurn.ca

This symbol denotes a product that is engineered to reduce installation and rework time.

For Additional System Tools See "Z1200 Carrier Tools and Accessories" on page 228

Z1202-N EZCARRY® ADJUSTABLE VERTICAL HIGH PERFORMANCE SIPHON JET – NO-HUB SERIES

Product Number	Dimensions in inches [mm]								Approx. Wt. lb [kg]
	A	B	D	E	H	J	K	N	
Z1202-N4	4 [102]	-	5 [127]	6-9/16 [167]	-	24 [610]	-	8-3/4	73 [33]
Z1202-ND4		-			-		-	13-1/8	119 [54]
Z1202-1NL4		4 [102]			7-9/16 [192]		15-1/2 [394]	8-3/4	74 [34]
Z1202-1NR4									
Z1202-1ND4								13-1/8	120 [54]
Z1202-2N4								8-3/4	78 [35]
Z1202-2ND4								13-1/18	120 [54]

PREFIXES	DESCRIPTION	SINGLE	DOUBLE
Z1202*	D.C.C.I. System with 4″ Adjustable Coupling	Combine with Fitting Type for Pricing	
ZQ1202	D.C.C.I. System with NPT Faceplate Non-Adjustable Coupling		
FITTING TYPE			
-N4	4″ No-Hub Stack, Single Inlet, 2″ Right-Hand Vent	1,566.00	-
-ND4	4″ No-Hub Stack, Double Inlets, 2″ Vent	-	2,491.00
-1NL4	4″ No-Hub Stack, Single Inlet, 4″ Left-Hand Side Inlet, 2″ Left-Hand Vent	1,744.00	-
-1NR4	4″ No-Hub Stack, Single Inlet, 4″ Right-Hand Side Inlet, 2″ Right-Hand Vent	1,744.00	-
-1ND4	4″ No-Hub Stack, Double Inlets, 4″ Side Inlet, 2″ Vent	-	2,710.00
-2N4	4″ No-Hub Stack, Single Inlet, Two 4″ Side Inlets, 2″ Right-Hand Vent	1,897.00	-
-2ND4	4″ No-Hub Stack, Double Inlets, Two 4″ Side Inlets, 2″ Vent	-	2,863.00
SUFFIXES			**ADD**
–A	Auxiliary Support Assembly (Required For 'P' Dim. Greater than 18″)	737.00	1,471.00
–CC	Corrosion Resistant Cast Iron Coupling (2-1/4″ thru 12″)	N/C	N/C
–CE	EZ-SET™ Coupling (6″, 12″ & 18″) 6″	141.00	282.00
	12″	237.00	473.00
	18″	539.00	1,078.00
–CL	Custom Length Standard Coupling with Integral Test Cap (Specify Length 6″ or 12″)	N/C	N/C
–CS	2-1/4″ Polymer Coupling with Integral Test Cap	N/C	N/C
–G	Galvanized Cast Iron	813.00	1,624.00
–JJ	Two 2″ Auxiliary Inlets (N4, ND4 Only)	400.00	796.00
–JL	2″ Left-Hand Auxiliary Inlet (N4, ND4 Only)	198.00	395.00
–JR	2″ Right-Hand Auxiliary Inlet (N4, ND4 Only)	198.00	395.00
–M	Auxiliary Foot Support (Required For 'P' Dim. 7″ thru 18″)	321.00	638.00
–RYK17	One Piece Unistrut Pre-Fab Foot Support	55.00	108.00
–VL	Left-Hand Vent Connection (N4, 1NR4, 2N4 Only)	N/C	N/C
–VP	Vandal-Proof Trim	187.00	374.00
–45	Finishing Frame for Siphon Jet System	73.00	145.00
–50	Flush Valve Supply Support for Water Closet	77.00	152.00
			DEDUCT
–F	Floor Mounted, Back Outlet Fixture Support	-158.00	-314.00

Z1200-EZCUTGUIDE†

†Image showing old style carrier

Z1200-CPLGWRNCH-3

This symbol denotes a product that is engineered to reduce installation and rework time.

For Additional System Tools See "Z1200 Carrier Tools and Accessories" on page 228

**Regularly furnished unless otherwise specified.*

For additional product information, please visit www.zurn.ca

Z1202-H EZCARRY® ADJUSTABLE VERTICAL HIGH PERFORMANCE SIPHON JET – HUB AND SPIGOT SERIES

Patented

ENGINEERING SPECIFICATION

Zurn Z1202-( )H EZCarry® vertical siphon jet water closet carrier system features a high performance waterway and 4" [102 mm] hub and spigot connections. System includes Dura-Coated cast iron right-hand, left-hand, or double main fitting with hydro-mechanically optimized sweep and extended 2" vent, adjustable gasketed faceplate, floor mounted pre-fab slotted foot supports with top anchoring pre-fab support base, heavy-duty 1/2" [13 mm] rear anchor tie down, fixture bolts, trim, stud protectors, bonded Neo-Seal gasket, and corrosion resistant adjustable 3" [76 mm] diameter x 6" [152 mm] coupling with integral test cap designed to increase flow velocity and line carry. EZCarry system complies with the requirements of ASME A112.6.1M, up to a 500 lb static load rating.

NOTES

1. Cut 4" [102 mm] adjustable coupling minimum "P" dimension obtainable = 2" [51 mm]. EZ-Set™ coupling, minimum 'P' dimension obtainable = 4-1/4" [108 mm] or 2-1/16" [52 mm] for 12" [305 mm] NPT.
2. Feet bolted to floor using minimum 1/2" [13 mm] diameter anchors and back slots on carrier feet.
3. Rear anchor foot required for secure installation.
4. 2" [51 mm] Hub & Spigot vent connection regularly furnished on right-hand side. Left-hand available when specified (Suffix –VL).
5. Auxiliary inlet available right (-JR) or left (-JL) or both sides (-JJ) when specified.

Z1202-H4 (Single)

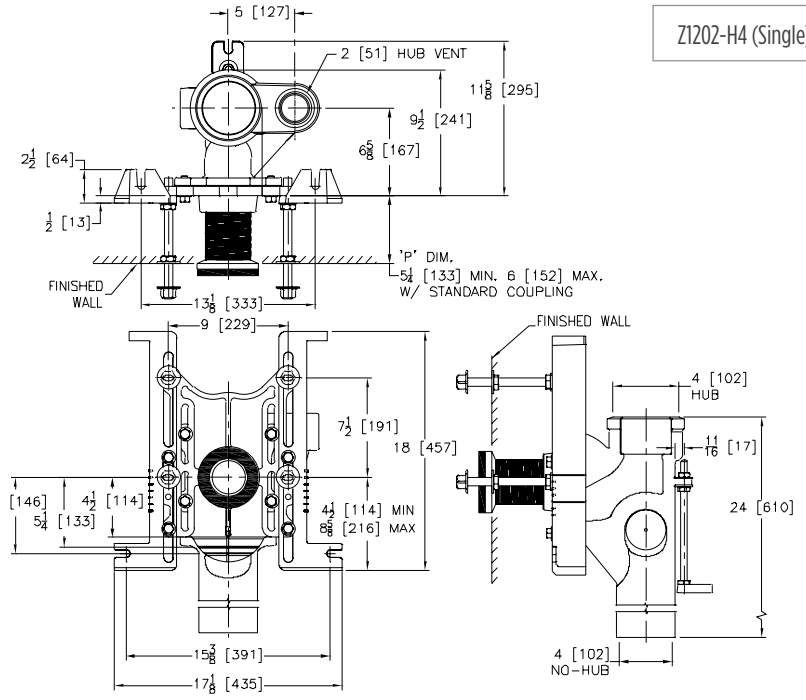

Z1202-HD4 (Double)

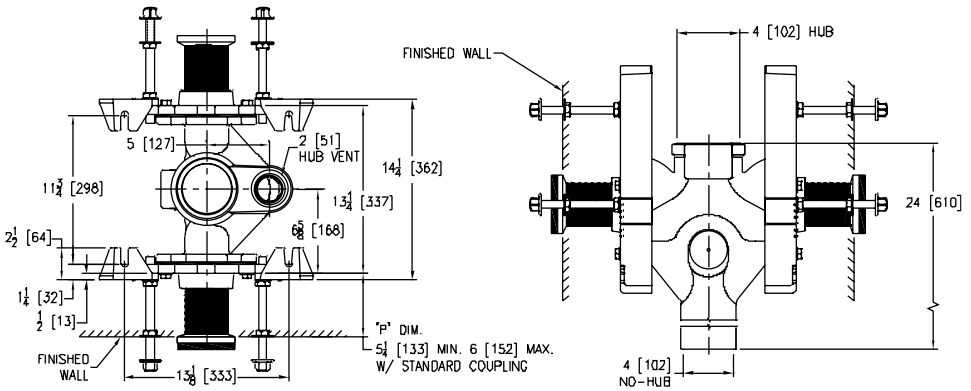

*Regularly furnished unless otherwise specified.

For additional product information, please visit www.zurn.ca

This symbol denotes a product that is engineered to reduce installation and rework time.

For Additional System Tools See "Z1200 Carrier Tools and Accessories" on page 228

Z1202-H EZCARRY® ADJUSTABLE VERTICAL HIGH PERFORMANCE SIPHON JET – HUB AND SPIGOT SERIES

Product Number	Dimensions in inches [mm]								Approx. Wt. lb [kg]
	A	B	D	E	H	J	K	N	
Z1202-H4	4 [102]	-		6-9/16 [167]	-	24 [610]	-	9-7/16 [240]	79 [36]
Z1202-HD4		-		6/11/16 [170]	-		-	13-3/8 [340]	125 [57]
Z1202-1HL4		4 [102]		6-9/16[167]	7-9/16 [192]		15-1/2 [394]	9-7/16 [240]	88 [40]
Z1202-1HR4									
Z1202-1HD4				6-11/16 [170]				13-3/8 [340]	132 [60]
Z1202-2H4				6-9/16 [167]				9-7/16 [240]	104 [47]
Z1202-2HD4				6-11/16 [170]				13-3/8 [340]	147 [67]

PREFIXES	DESCRIPTION	SINGLE	DOUBLE
Z1202*	D.C.C.I. System with 4″ Adjustable Coupling	Combine with Fitting Type for Pricing	
ZQ1202	D.C.C.I. System with NPT Faceplate Non-Adjustable Coupling		
FITTING TYPE			
-H4	4″ Hub and Spigot Stack, Single Inlet, 2″ Right-Hand Vent	1,722.00	-
-HD4	4″ Hub and Spigot Stack, Double Inlets, 2″ Vent	-	2,989.00
-1HD4	4″ Hub and Spigot Stack, Double Inlets, 4″ Side Inlet, 2″ Vent	-	2,980.00
-1HL4	4″ Hub and Spigot Stack, Single Inlet, 4″ Left-Hand Side Inlet, 2″ Left-Hand Vent	1,920.00	-
-1HR4	4″ Hub and Spigot Stack, Single Inlets, 4″ Right-Hand Side Inlet, 2″ Right-Hand Vent	1,920.00	-
-2H4	4″ Hub and Spigot Stack, Single Inlet, Two 4″ Side Inlets, 2″ Right-Hand Vent	2,083.00	-
-2HD4	4″ Hub and Spigot Stack, Double Inlets, Two 4″ Side Inlets, 2″ Vent	-	3,027.00
SUFFIXES			**ADD**
–A	Auxiliary Support Assembly (Required For 'P' Dim. Greater than 18″)	737.00	1,471.00
–CC	Corrosion Resistant Cast Iron Coupling (2-1/4″ thru 12″)	N/C	N/C
–CE	EZ-SET™ Coupling (6″, 12″ & 18″) 6″	141.00	282.00
	12″	237.00	473.00
	18″	539.00	1,078.00
–CL	Custom Length Standard Coupling with Integral Test Cap (Specify Length 6″ or 12″)	N/C	N/C
–CS	2-1/4″ Polymer Coupling with Integral Test Cap	N/C	N/C
–G	Galvanized Cast Iron	813.00	1,624.00
–JJ	Two 2″ Auxiliary Inlets (H4, HD4 Only)	-	182.00
–JL	2″ Left-Hand Auxiliary Inlet (H4, HD4, 1HR4 Only)	198.00	395.00
–JR	2″ Right-Hand Auxiliary Inlet (H4, HD4, 1HR4 Only)	198.00	395.00
–M	Auxiliary Foot Support (Required For 'P' Dim. 7″ thru 18″)	321.00	638.00
–RYK17	One Piece Unistrut Pre-Fab Foot Support	55.00	108.00
–VL	Left-Hand Vent Connection (H4, 1HR4, 2H4 Only)	N/C	N/C
–VP	Vandal-Proof Trim	184.00	374.00
–45	Finishing Frame for Siphon Jet System	73.00	145.00
–50	Flush Valve Supply Support for Water Closet	77.00	152.00
			DEDUCT
–F	Floor Mounted, Back Outlet Fixture Support	-158.00	-314.00

Z1200-EZCUTGUIDE†

†Image showing old style carrier

Z1200-CPLGWRNCH-3

This symbol denotes a product that is engineered to reduce installation and rework time.

For Additional System Tools See "Z1200 Carrier Tools and Accessories" on page 228

**Regularly furnished unless otherwise specified.*

For additional product information, please visit www.zurn.ca

Z1202-N-XB EZCARRY® BARIATRIC CARRIER – 1000 LB ADJUSTABLE VERTICAL SIPHON JET – NO-HUB SERIES

Patented

ENGINEERING SPECIFICATION

Zurn Z1202-N( )-XB EZCarry® bariatric vertical siphon jet water closet carrier system features high performance Dura-Coated cast iron main fitting with hydromechanically optimized sweep, 4" [102 mm] no-hub connections, and extended 2" [51 mm] vent. Corrosion resistant adjustable cast iron coupling is designed to increase flow velocity and line carry. Labor saving Neo-Seal bonded gasket optimizes flow performance, while reducing installation steps. Complete system includes an adjustable, gasketed faceplate, floor mounted foot supports, rigid support frame assembly, extra heavy-duty 1/2" [13 mm] rear anchor tie down, fixture bolts, trim, and stud protectors. EZCarry® XB system complies with all applicable requirements of ASME A112.6.1M up to a 1000 lb maximum static load.

NOTES

1. Cut 4" [102 mm] adjustable coupling minimum 'P' dimension obtainable = 3" [76 mm].
2. Feet bolted to floor using minimum 1/2" [13 mm] diameter anchors.
3. Rear anchor foot required for secure installation.
4. Floor anchors must each be able to withstand a pull-out force of 748 lb.
5. Pull-out forces are calculated values with standard coupling assembly. No safety factor has been applied. See Form #C38 for more information.
6. 2" [51 mm] no-hub vent connection regularly furnished on right-hand side. Left hand available when specified (Suffix -VL).
7. Auxiliary inlet available right (-JR) or left (-JL) or both sides (-JJ) when specified.

Product Number	Approximate Weight lb [kg]
Z1202-N4-XB	115 [52]
Z1202-ND4-XB	188 [85]

PREFIXES	DESCRIPTION	SINGLE	DOUBLE
Z1202*	D.C.C.I. System with 4" Adjustable Coupling	Combine with Fitting Type for Pricing	
FITTING TYPE			
-N4-XB	4" No-Hub Stack, Single Inlet, 2" Right-Hand Vent	5,079.00	-
-ND4-XB	4" No-Hub Stack, Back-to-Back Inlet (Double), 2" Right-Hand Vent	-	9,803.00
SUFFIXES			**ADD**
–CC	Corrosion Resistant Cast Iron Coupling (2-1/4" thru 12")	N/C	N/C
–G	Galvanized Cast Iron	1,279.00	2,134.00
–JJ	Two 2" Auxiliary Inlets	722.00	722.00
–JL	2" Left-Hand Auxiliary Inlet	363.00	363.00
–JR	2" Right-Hand Auxiliary Inlet	363.00	363.00
–VL	Left-Hand Vent Connection	N/C	N/C
–VP	Vandal-Proof Trim	135.00	267.00
–50	Flush Valve Supply Support for Water Closet	90.00	175.00

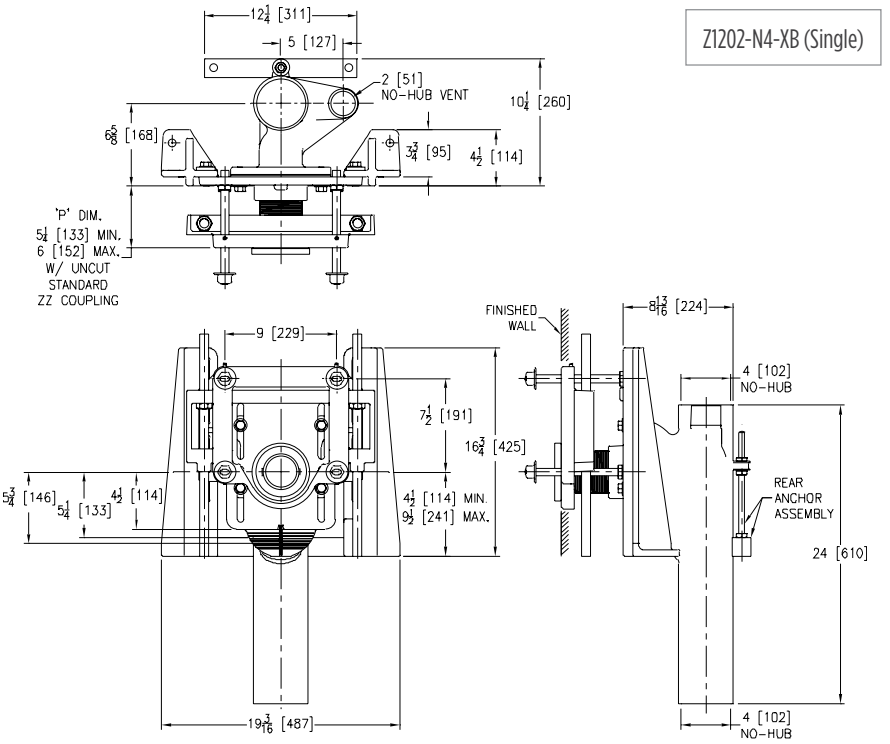

*Regularly furnished unless otherwise specified.

For additional product information, please visit www.zurn.ca

This symbol denotes a product that is engineered to reduce installation and rework time.

For Additional System Tools See "Z1200 Carrier Tools and Accessories" on page 228

Z1202-N-XH EZCARRY® EXTRA HEAVY-DUTY 750 LB ADJUSTABLE VERTICAL SIPHON JET – NO-HUB SERIES

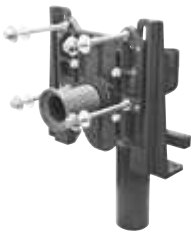

Patented

ENGINEERING SPECIFICATION

Zurn Z1202-N( )-XH EZCarry® extra heavy-duty vertical siphon jet water closet carrier system features high performance Dura-Coated cast iron main fitting with hydro-mechanically optimized sweep, 4" [102 mm] no-hub connections, and extended 2" [51 mm] vent. Corrosion resistant adjustable 3" [76 mm] diameter x 6" [152 mm] coupling with integral test cap is designed to increase flow velocity and line carry. Labor saving Neo-Seal bonded gasket optimizes flow performance, while reducing installation steps. Complete system includes an adjustable, gasketed faceplate, floor mounted foot supports, extra heavy-duty 1/2" [13 mm] rear anchor tie down, fixture bolts, trim, and stud protectors. EZCarry® XH system complies with all applicable requirements of ASME A112.6.1M up to a 750 lb maximum static load.

NOTES

1. Cut 4" [102 mm] adjustable coupling minimum 'P' dimension obtainable = 2" [51 mm]. EZ-Set™ coupling, minimum 'P' dimension obtainable = 4-1/4" [108 mm] or 2-1/16" [52 mm] for 12" [305 mm] NPT.
2. Feet bolted to floor using minimum 1/2" [13 mm] diameter anchors.
3. Rear anchor assembly required for secure installation.
4. Floor anchors must each be able to withstand a pull-out force of 820 lb.
5. Pull-out forces are calculated values with standard coupling assembly. No safety factor has been applied. See Form #C38 for more information.
6. 2" [51 mm] no-hub vent connection regularly furnished on right-hand side. Left hand available when specified (Suffix -VL).
7. Auxiliary inlet available right (-JR) or left (-JL) or both sides (-JJ) when specified.

Product Number	Approximate Weight lb [kg]
Z1202-N4-XH	99 [45]
Z1202-ND4-XH	156 [71]

PREFIXES	DESCRIPTION		SINGLE	DOUBLE
Z1202*	D.C.C.I. System with 4" Adjustable Coupling		Combine with Fitting Type for Pricing	
ZQ1202	D.C.C.I. System with NPT Faceplate Non-Adjustable Coupling			
FITTING TYPE				
-N4-XH	4" No-Hub Stack, Single Inlet, 2" Right-Hand Vent		3,691.00	-
-ND4-XH	4" No-Hub Stack, Back-to-Back Inlet (Double), 2" Right-Hand Vent		-	7,123.00
SUFFIXES				**ADD**
–CC	Corrosion Resistant Cast Iron Coupling (2-1/4" thru 12")		N/C	N/C
–CE	EZ-SET™ Coupling (6", 12" & 18")	6"	141.00	282.00
		12"	237.00	473.00
		18"	539.00	1,078.00
–CL	Custom Length Standard Coupling with Integral Test Cap (Specify Length 6" or 12")		N/C	N/C
⏲ –CS	2-1/4" Polymer Coupling with Integral Test Cap		N/C	N/C
–G	Galvanized Cast Iron		928.00	1,848.00
–JJ	Two 2" Auxiliary Inlets		722.00	722.00
–JL	2" Left-Hand Auxiliary Inlet		363.00	363.00
–JR	2" Right-Hand Auxiliary Inlet		363.00	363.00
–VL	Left-Hand Vent Connection (H4, 1HR4, 2H4 Only)		N/C	N/C
–VP	Vandal-Proof Trim		135.00	267.00
⏲ –50	Flush Valve Supply Support for Water Closet		90.00	175.00

Z1202-N4-XH (Single)

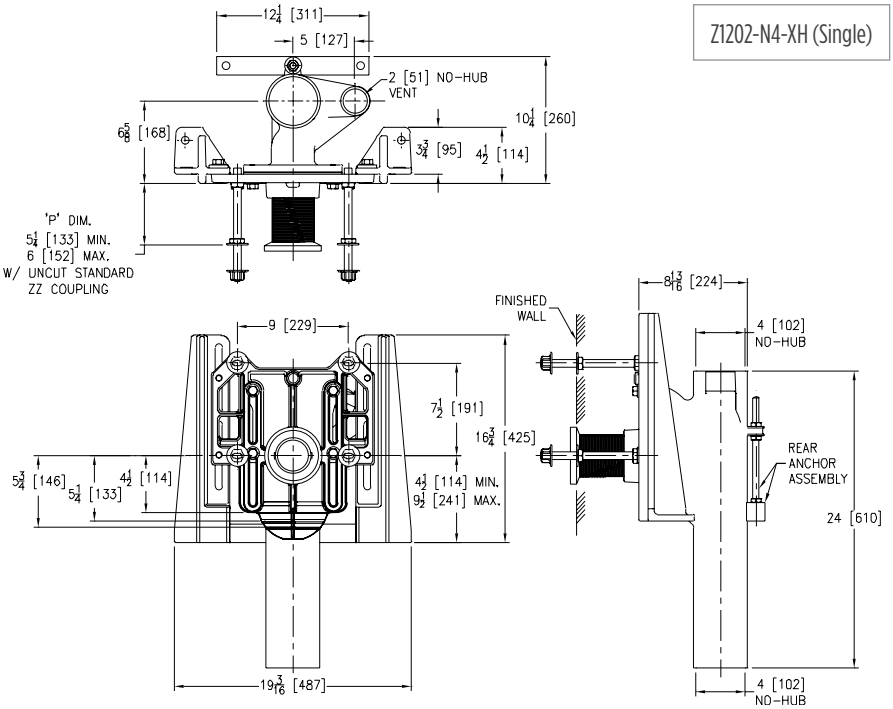

⏲ *This symbol denotes a product that is engineered to reduce installation and rework time.*

For Additional System Tools See "Z1200 Carrier Tools and Accessories" on page 228

**Regularly furnished unless otherwise specified.*

For additional product information, please visit www.zurn.ca

ZF1202-N EZCARRY® VERTICAL SIPHON JET ONE-PIECE CARRIER – NO-HUB SERIES

Patent Pending

ENGINEERING SPECIFICATION

Zurn ZF1202-N( ) EZCarry® one-piece combination floor mounted foot/faceplate horizontal siphon jet water closet carrier system, supplied for ( ) rough-in height, features high performance Dura-Coated cast iron main fitting with hydro-mechanically optimized sweep, 4" [102 mm] no-hub connections, and extended 2" [51 mm] vent. Corrosion resistant adjustable 3" [76 mm] diameter x 6" [152 mm] coupling with integral test cap is designed to increase flow velocity and line carry. Labor saving Neo-Seal bonded gasket optimizes flow performance, while reducing installation steps. Complete system includes one-piece combination foot/faceplate, heavy-duty 1/2" [13 mm] rear anchor tie down, fixture bolts, trim, and stud protectors. EZCarry® one-piece combination floor mounted foot/faceplate system complies with all applicable requirements of ASME A112.6.1M up to a 500 lb maximum static load.

NOTES

1. Cut 4" [102 mm] adjustable coupling minimum 'P' dimension obtainable = 2" [51 mm]. EZ-Set™ coupling, minimum 'P' dimension obtainable = 4-1/4" [108 mm] or 2-1/16" [52 mm] for 12" [305 mm] NPT.
2. Feet bolted to floor using minimum 1/2" [13 mm] diameter anchors.
3. Rear anchor assembly required for secure installation (not on ND4).
4. 2" [51 mm] no-hub vent connection regularly furnished on right-hand side. Left-hand available when specified (Suffix -VL).
5. Auxiliary inlet available right (-JR) or left (-JL) or both sides (-JJ).

ZF1202-N4 (Single)

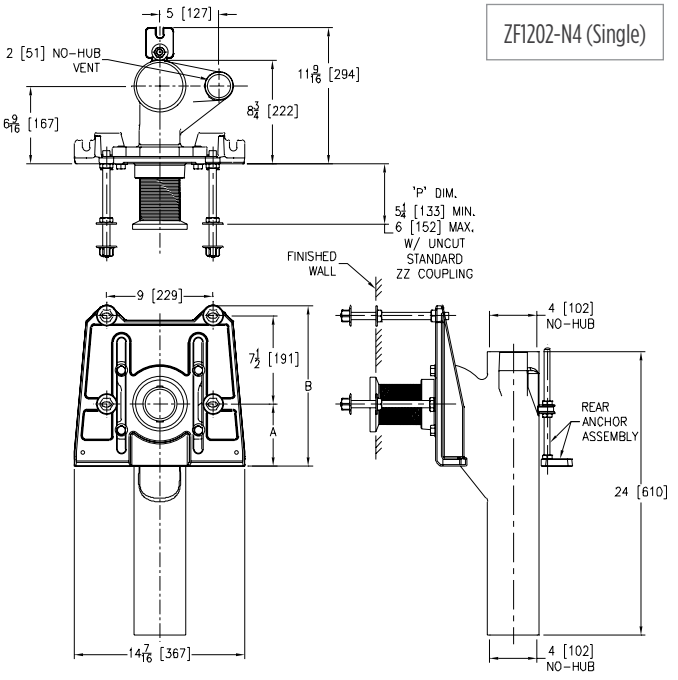

Product Number	Dimensions in inches [mm] A	Dimensions in inches [mm] B	Approximate Weight lb [kg]
ZF1202-N4-F55	5-1/2 [140]	13-7/8 [352]	87 [39]
ZF1202-ND4-F55			107 [49]
ZF1202-N4-F75	7-1/2 [191]	15-7/8 [403]	91 [41]
ZF1202-ND4-F75			115 [52]

PREFIXES	DESCRIPTION		SINGLE	DOUBLE
ZF1202*	D.C.C.I. System with 4" Adjustable Coupling		Combine with Fitting Type for Pricing	
ZQF1202	D.C.C.I. System with NPT Faceplate Non-Adjustable Coupling			
FITTING TYPE				
-N4-F55	4" No-Hub Right-Hand Inlet with Flow to Left with 5-1/2" Non-Adjustable Rough-In Height		1,758.00	-
-ND4-F55	4" No-Hub Back-to-Back Inlet (Double), with 5-1/2" Non-Adjustable Rough-In Height		-	3,104.00
-N4-F75	4" No-Hub Left-Hand Inlet with Flow to Right with 7-1/2" Non-Adjustable Rough-In Height		1,758.00	-
-ND4-F75	4" No-Hub Back-to-Back Inlet (Double), with 7-1/2" Non-Adjustable Rough-In Height		-	3,104.00
SUFFIXES				**ADD**
–A	Auxiliary Support Assembly (Required For 'P' Dim. Greater than 18")		861.00	1,715.00
–CC	Corrosion Resistant Cast Iron Coupling (2-1/4" thru 12")		50.00	98.00
–CE	EZ-SET™ Coupling (6", 12" & 18")	6"	141.00	282.00
		12"	237.00	473.00
		18"	539.00	1,078.00
–CL	Custom Length Standard Coupling with Integral Test Cap (Specify Length 6" or 12")		N/C	N/C
–CS	2-1/4" Polymer Coupling with Integral Test Cap		N/C	N/C
–G	Galvanized Cast Iron		928.00	1,848.00
–JJ	Two 2" Auxiliary Inlets		679.00	679.00
–JL	2" Left-Hand Auxiliary Inlet		343.00	343.00
–JR	2" Right-Hand Auxiliary Inlet		343.00	343.00
–M	Auxiliary Foot Support (Required For 'P' Dim. 10" thru 18")		326.00	644.00
–VL	Left-Hand Vent Connection		N/C	N/C
–VP	Vandal-Proof Trim		135.00	267.00
–45	Finishing Frame for Siphon Jet System (For Blowout System specify -45-B)		84.00	164.00
–50	Flush Valve Supply Support for Water Closet		90.00	175.00

*Regularly furnished unless otherwise specified.

This symbol denotes a product that is engineered to reduce installation and rework time.

For Additional System Tools See "Z1200 Carrier Tools and Accessories" on page 228

ZN1202-N EZCARRY® ADJUSTABLE VERTICAL SIPHON JET – NO-HUB NARROW WALL SYSTEM

Patent Pending

ENGINEERING SPECIFICATION

Zurn ZN1202-N( )4 EZCarry® narrow wall vertical siphon jet water closet carrier system features high performance Dura-Coated cast iron main fitting with hydromechanically optimized sweep, 4" [102 mm] no-hub connections, and extended 2" [51 mm] vent. Corrosion resistant adjustable 3" [76 mm] diameter x 6" [152 mm] coupling with integral test cap is designed to increase flow velocity and line carry. Labor saving Neo-Seal bonded gasket optimizes flow performance while reducing installation steps. Complete system includes an adjustable, gasketed faceplate, floor mounted foot supports, fixture bolts, trim, and stud protectors. EZCarry® narrow wall system complies with all applicable requirements of ASME A112.6.1M up to a 500 lb maximum static load.

NOTES

1. Cut 4" [102 mm] adjustable coupling minimum 'P' dimension obtainable = 1-1/4" [32 mm].
2. Carrier floor anchors must each be able to withstand a pull-out force of 1741 lb.
3. Pull-out forces are calculated values with standard coupling assembly. No safety factor has been applied. See Form #C38 for more information.
4. 2" [51 mm] no-hub vent connection regularly furnished on right-hand side. Left hand available when specified (Suffix -VL).
5. Auxiliary inlet available right (-JR) or left (-JL) or both sides (-JJ) when specified.

Product Number	Approximate Weight lb [kg]
ZN1202-N4	90 [41]
ZN1202-ND4	158 [72]

PREFIXES	DESCRIPTION	SINGLE	DOUBLE
ZN1202*	D.C.C.I. System with 4" Adjustable Coupling	Combine with Fitting Type for Pricing	
FITTING TYPE			
-N4	4" No-Hub Stack, Single Inlet, 2" Right-Hand Vent	1,566.00	-
-ND4	4" No-Hub Stack, Back-to-Back Inlet (Double), 2" Right-Hand Vent	-	1,979.00
SUFFIXES			**ADD**
–CC	Corrosion Resistant Cast Iron Coupling (2-1/4" thru 12")	50.00	98.00
◷ –CS	2-1/4" Polymer Coupling with Integral Test Cap	N/C	N/C
–G	Galvanized Cast Iron	928.00	1,848.00
–JJ	Two 2" Auxiliary Inlets	400.00	400.00
–JL	2" Left-Hand Auxiliary Inlet	198.00	198.00
–JR	2" Right-Hand Auxiliary Inlet	198.00	198.00
–VL	Left-Hand Vent Connection	N/C	N/C
–VP	Vandal-Proof Trim	187.00	374.00
◷ –50	Flush Valve Supply Support for Water Closet	70.00	152.00

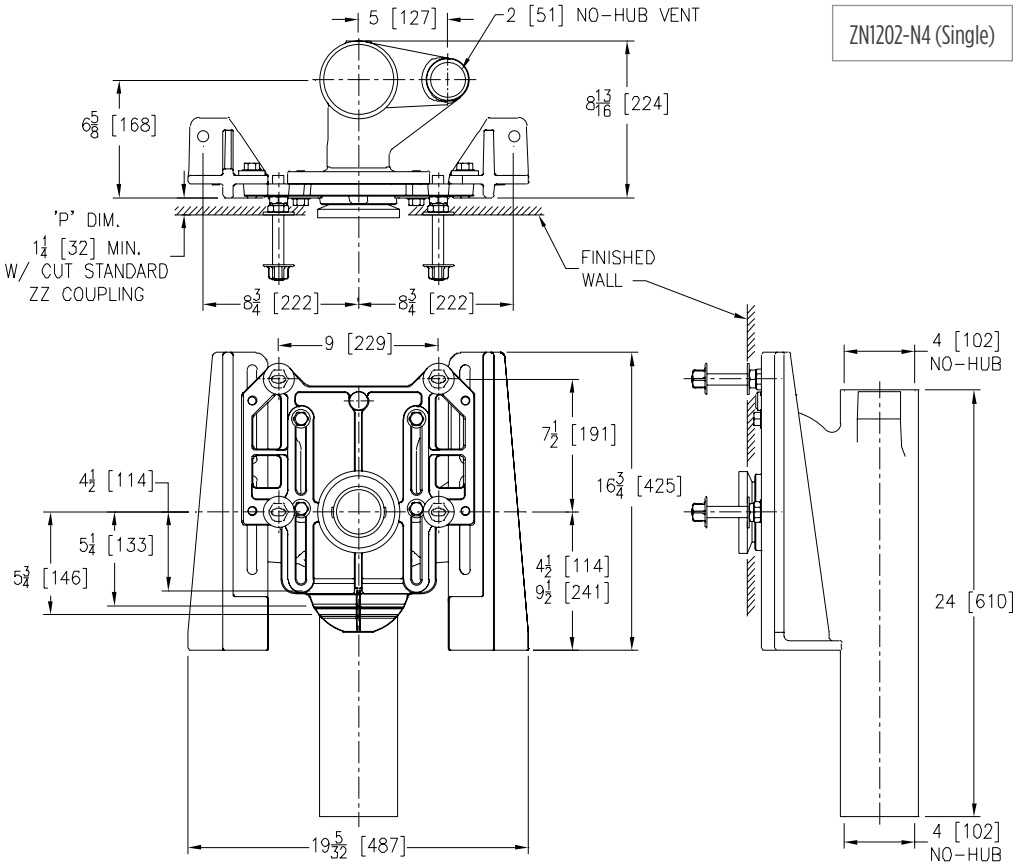

◷ *This symbol denotes a product that is engineered to reduce installation and rework time.*

For Additional System Tools See "Z1200 Carrier Tools and Accessories" on page 228

**Regularly furnished unless otherwise specified.*

For additional product information, please visit www.zurn.ca

Z1203-N ADJUSTABLE HORIZONTAL SIPHON JET – NO-HUB SERIES

ENGINEERING SPECIFICATION

Zurn Z1203-N( ) adjustable, horizontal siphon jet water closet provides a rigid system with ( ) size no-hub connections. Comes complete with Dura-Coated cast iron right-hand, left-hand, or double main fitting, 2" [51 mm] vent adjustable gasketed faceplate, universal floor mounted foot supports, corrosion resistant adjustable polymer icoupling with integral test cap, fixture bolts, trim, and stud protectors. Includes rear anchor tie down and bonded Neo-Seal gasket.

NOTES

1. Minimum "P" dimension attainable = 2" [51 mm].
2. Feet anchored to floor using minimum 1/2" [13 mm] diameter bolts through rear slots on carrier feet.
3. Rear anchor foot required for secure installation.
4. When used with Z1204 vertical fitting, and the centerline of the fitting to the finished wall exceeds 11-3/4" [298 mm], a 7" [178 mm] or longer, coupling is needed.

Z1203-NR (Single)

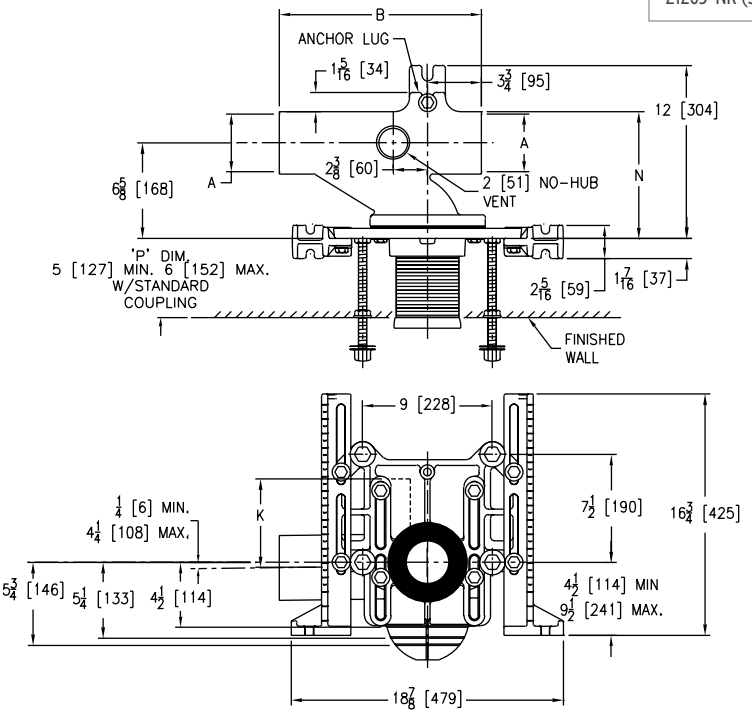

Z1203-ND (Double)

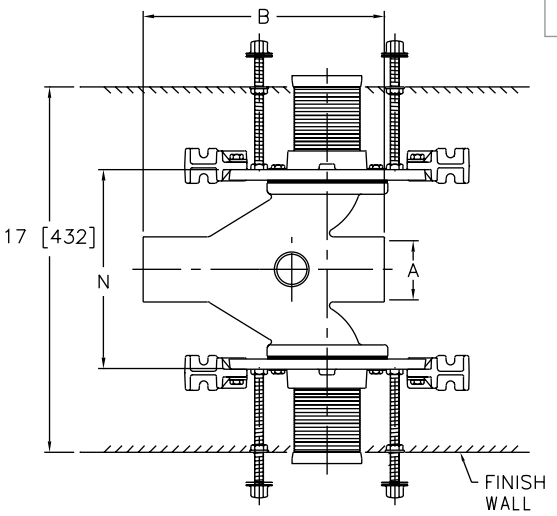

*Regularly furnished unless otherwise specified.

For additional product information, please visit www.zurn.ca

This symbol denotes a product that is engineered to reduce installation and rework time.

For Additional System Tools See "Z1200 Carrier Tools and Accessories" on page 228

Z1203-N ADJUSTABLE HORIZONTAL SIPHON JET – NO-HUB SERIES

Product Number	Dimensions in inches [mm]				Approximate Weight lb [kg]
	A	B	K	N	
Z1203-NL3	3 [76]	14 [356]	6-1/8 [156]	7-7/16 [189]	64 [29]
Z1203-NR3					
Z1203-ND3				11-1/4 [286]	114 [52]
Z1203-NL4	4 [102]			8-7/8 [225]	67 [30]
Z1203-NR4					
Z1203-ND4				13-3/8 [340]	120 [54]

PREFIXES	DESCRIPTION	SINGLE	DOUBLE
Z1203*	D.C.C.I. System with 4″ Adjustable Coupling	Combine with Fitting Type for Pricing	
ZQ1203	D.C.C.I. System with NPT Faceplate Non-Adjustable Coupling		
FITTING TYPE			
-NR3	3″ No-Hub Right-Hand Inlet with Flow to Left	1,100.00	-
-NL3	3″ No-Hub Left-Hand Inlet with Flow to Right	1,100.00	-
-ND3	3″ No-Hub Back-to-Back Inlet (Double)	-	1,900.00
-NR4	4″ No-Hub Right-Hand Inlet with Flow to Left	1,100.00	-
-NL4	4″ No-Hub Left-Hand Inlet with Flow to Right	1,100.00	-
-ND4	4″ No-Hub Back-to-Back Inlet (Double)	-	1,900.00
SUFFIXES			**ADD**
–A	Auxiliary Support Assembly (Required For P-Dim. Greater than 18″)	737.00	1,471.00
–B	Blowout Type Fixture Support	N/C	N/C
–CC	Corrosion Resistant Cast Iron Coupling (6″ to 12″)	50.00	98.00
–CL	Coupling Length Greater than 12″ Per Inch (Specify Length Required)	90.00	178.00
–JC	2″ Auxiliary Inlet with Sanitary Sweep on Faceplate Centerline	360.00	-
–M	Auxiliary Foot Support (Required For P-Dim. 10″ - 18″)	-	-
◷ –PF	Pre-Fab Foot	N/C	N/C
◷ –PS	Pre-Fab Slotted Foot	N/C	N/C
◷ –RYK	Unistrut Pre-Fab Foot	N/C	N/C
–VP	Vandal-Proof Trim	187.00	374.00
–X3	3″ Foot Extension Assembly	90.00	174.00
–X4	4″ Foot Extension Assembly	118.00	226.00
◷ –45	Finishing Frame for Siphon Jet System (For Blowout System specify -45-B)	73.00	145.00
◷ –50	Flush Valve Supply Support for Water Closet (Previously Z1210-50)	77.00	152.00
			DEDUCT
–F	Floor Mounted, Back Outlet Fixture Support	-158.00	-311.00

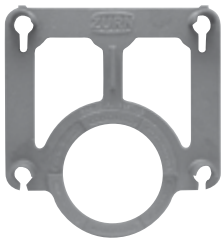

◷ Z1200-RI-GAUGE

Z1200-CPLGWRNCH-4

◷ This symbol denotes a product that is engineered to reduce installation and rework time.

For Additional System Tools See "Z1200 Carrier Tools and Accessories" on page 228

**Regularly furnished unless otherwise specified.*

For additional product information, please visit www.zurn.ca

Z1203-H ADJUSTABLE HORIZONTAL SIPHON JET – HUB AND SPIGOT SERIES

ENGINEERING SPECIFICATION

Zurn Z1203-H( ) adjustable, horizontal siphon jet water closet provides a rigid system with ( ) size hub and spigot connections. Comes complete with Dura-Coated cast iron right-hand, left-hand, or double main fitting, 2" [51 mm] vent adjustable gasketed faceplate, universal floor mounted foot supports, corrosion resistant adjustable polymer coupling with integral test cap, fixture bolts, trim, and stud protectors. Includes rear anchor tie down and bonded Neo-Seal gasket.

NOTES

1. Minimum "P" dimension attainable = 2" [51 mm].
2. Feet anchored to floor using minimum 1/2" [13 mm] diameter bolts through rear slots on carrier feet.
3. Rear anchor foot required for secure installation (not on HD series).

Z1203-HR (Single)

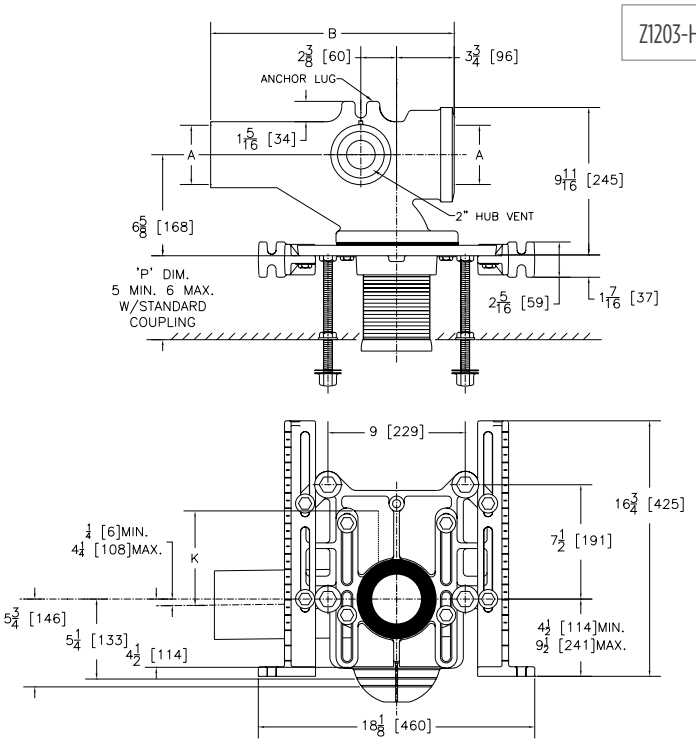

Z1203-HD (Double)

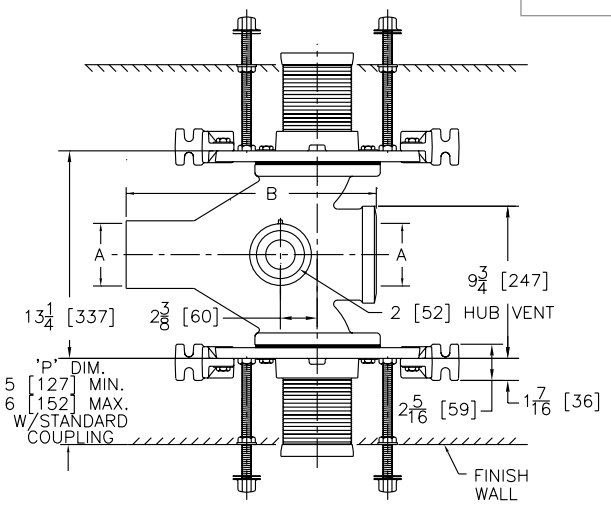

*Regularly furnished unless otherwise specified.

For additional product information, please visit www.zurn.ca

This symbol denotes a product that is engineered to reduce installation and rework time.

For Additional System Tools See "Z1200 Carrier Tools and Accessories" on page 228

Z1203-H ADJUSTABLE HORIZONTAL SIPHON JET – HUB AND SPIGOT SERIES

Product Number	Dimensions in inches [mm]				Approximate Weight lb [kg]
	A	B	K	N	
Z1203-HL4	4 [102]	16 [406]	6-1/8 [156]	9-3/4 [248]	75 [34]
Z1203-HR4					
Z1203-HD4				13-1/4 [337]	125 [57]

PREFIXES	DESCRIPTION	SINGLE	DOUBLE
Z1203*	D.C.C.I. System with 4″ Adjustable Coupling	Combine with Fitting Type for Pricing	
ZQ1203	D.C.C.I. System with NPT Faceplate Non-Adjustable Coupling		
FITTING TYPE			
-HL4	4″ Hub & Spigot, Left-Hand Inlet with Flow to Right	1,100.00	-
-HR4	4″ Hub & Spigot, Right-Hand Inlet with Flow to Left	1,100.00	-
-HD4	4″ Hub & Spigot, Back-to-Back Inlet (Double)	-	1,900.00
SUFFIXES			**ADD**
–A	Auxiliary Support Assembly (Required For P-Dim. Greater than 18″)	737.00	1,471.00
–B	Blowout Type Fixture Support	N/C	N/C
–CC	Corrosion Resistant Cast Iron Coupling (6″ to 12″)	50.00	98.00
–CL	Coupling Length Greater than 12″ Per Inch (Specify Length Required)	90.00	178.00
–G	Galvanized Cast Iron	713.00	1,419.00
–M	Auxiliary Foot Support (Required For P-Dim. 10″ thru 18″)	-	-
⏲ –PF	Pre-Fab Foot	N/C	N/C
⏲ –PS	Pre-Fab Slotted Foot	N/C	N/C
⏲ –RYK	Unistrut Pre-Fab Foot	N/C	N/C
–VP	Vandal-Proof Trim	187.00	374.00
–X3	3″ Foot Extension Assembly	90.00	174.00
–X4	4″ Foot Extension Assembly	118.00	226.00
⏲ –45	Finishing Frame for Siphon Jet System (For Blowout System specify -45-B)	73.00	145.00
⏲ –50	Flush Valve Supply Support for Water Closet (Previously Z1210-50)	77.00	152.00
			DEDUCT
–F	Floor Mounted, Back Outlet Fixture Support	-158.00	-311.00

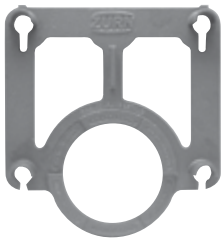

⏲ Z1200-RI-GAUGE

Z1200-CPLGWRNCH-4

⏲ This symbol denotes a product that is engineered to reduce installation and rework time.

For Additional System Tools See "Z1200 Carrier Tools and Accessories" on page 228

**Regularly furnished unless otherwise specified.*

For additional product information, please visit www.zurn.ca

ZE1203-N ADJUSTABLE HORIZONTAL SIPHON JET WITH ELONGATED FITTING – NO-HUB SERIES

ENGINEERING SPECIFICATION

Zurn ZE1203-N( ) adjustable, horizontal siphon jet water closet provides a rigid system with ( ) no-hub connections. Comes complete with Dura-Coated cast iron right-hand, left-hand, or double main elongated fitting, 2" [51 mm] vent, adjustable gasketed faceplate, universal floor mounted foot supports, corrosion resistant adjustable polymer coupling with integral test cap, fixture bolts, trim, and stud protectors. Includes rear anchor tie down and bonded Neo-Seal gasket.

NOTES

1. 13-1/2" [343 mm] minimum space required between front of foot and rear of anchor to install ZE1203 Series.
2. Minimum 'P' dimension obtainable = 2" [51 mm].
3. Feet bolted to floor using min. 1/2" [13 mm] diameter bolts through back slots on carrier feet.
4. Rear anchor foot mandatory for secure installation.

ZE1203-NR4 (Single)

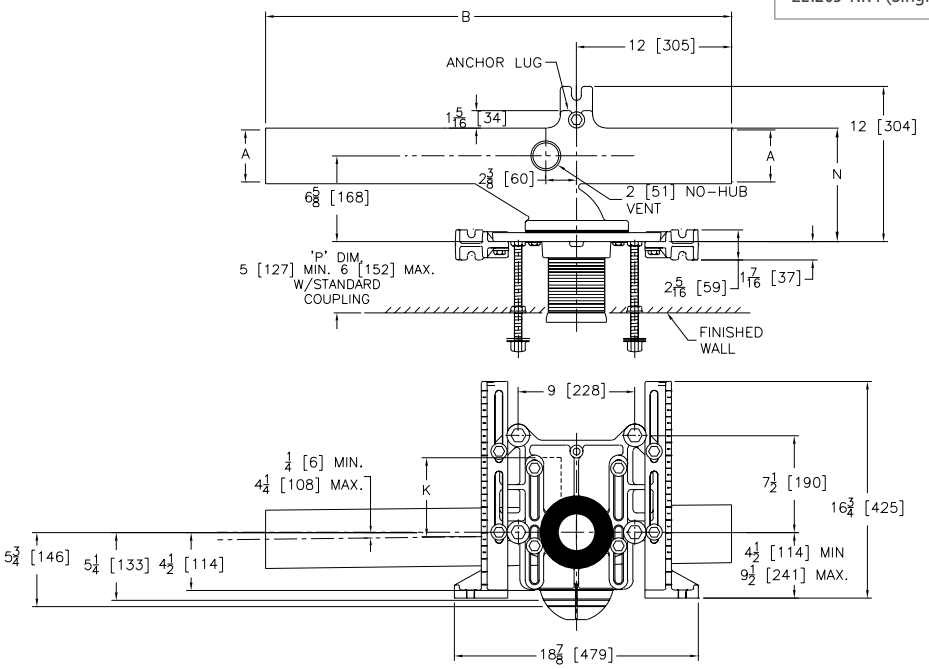

ZE1203-ND4 (Double)

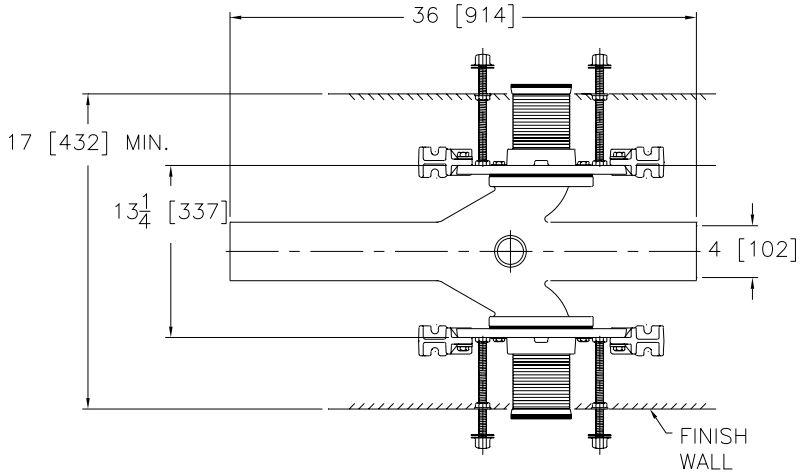

*Regularly furnished unless otherwise specified.

For additional product information, please visit www.zurn.ca

This symbol denotes a product that is engineered to reduce installation and rework time.

For Additional System Tools See "Z1200 Carrier Tools and Accessories" on page 228

⏲ ZE1203-N ADJUSTABLE HORIZONTAL SIPHON JET WITH ELONGATED FITTING – NO-HUB SERIES

Product Number	Dimensions in inches [mm]				Approximate Weight lb [kg]
	A	B	K	N	
ZE1203-NL4	4 [102]	36 [914]	6-1/8 [156]	8-7/8 [225]	84 [38]
ZE1203-NR4					
ZE1203-ND4				13-3/8 [340]	136 [62]

PREFIXES	DESCRIPTION	SINGLE	DOUBLE
ZE1203*	D.C.C.I. Elongated Fitting System with 4″ Adjustable Coupling	Combine with Fitting Type for Pricing	
ZEQ1203	D.C.C.I. Elongated Fitting System with NPT Faceplate, Non-Adjustable Coupling		
FITTING TYPE			
-NR4	4″ No-Hub Right-Hand Inlet with Flow to Left	1,588.00	-
-NL4	4″ No-Hub Left-Hand Inlet with Flow to Right	1,588.00	-
-ND4	4″ No-Hub Back-to-Back Inlet (Double)	-	2,757.00
SUFFIXES			**ADD**
–A	Auxiliary Support Assembly (Required For P-Dim. Greater than 18″)	737.00	1,471.00
–B	Blowout Type Fixture Support	N/C	N/C
–CC	Corrosion Resistant Cast Iron Coupling (6″ to 12″)	50.00	98.00
–CL	Coupling Length Greater than 12″ - Per Inch (Specify Length Required)	90.00	178.00
–JC	2″ Auxiliary Inlet with Sanitary Sweep	360.00	-
–M	Auxiliary Foot Support (Required For P-Dim. 10″ thru 18″)	277.00	638.00
⏲ –PF	Pre-Fab Foot	N/C	N/C
⏲ –PS	Pre-Fab Slotted Foot	N/C	N/C
⏲ –RYK	Unistrut Pre-Fab Foot	N/C	N/C
–VP	Vandal-Proof Trim	187.00	374.00
–X3	3″ Foot Extension Assembly	90.00	174.00
–X4	4″ Foot Extension Assembly	118.00	226.00
⏲ –45	Finishing Frame for Siphon Jet System (For Blowout System specify -45-B)	73.00	145.00
⏲ –50	Flush Valve Supply Support for Water Closet (Previously Z1210-50)	77.00	152.00
			DEDUCT
–F	Floor Mounted, Back Outlet Fixture Support	-158.00	-311.00

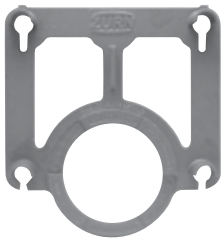

⏲ Z1200-RI-GAUGE

Z1200-CPLGWRNCH-4

⏲ This symbol denotes a product that is engineered to reduce installation and rework time.

For Additional System Tools See "Z1200 Carrier Tools and Accessories" on page 228

**Regularly furnished unless otherwise specified.*

For additional product information, please visit www.zurn.ca

ZE1203-H ADJUSTABLE HORIZONTAL SIPHON JET WITH ELONGATED FITTING – HUB AND SPIGOT SERIES

ENGINEERING SPECIFICATION

Zurn ZE1203-H( ) adjustable, horizontal siphon jet water closet provides a rigid system with ( ) size hub and spigot connections. Comes complete with Dura-Coated cast iron right-hand, left-hand, or double main elongated fitting, 2" [51 mm] vent, adjustable gasketed faceplate, universal floor mounted foot supports, corrosion resistant adjustable polymer coupling with integral test cap, fixture bolts, trim, and stud protectors. Includes rear anchor tie down and bonded Neo-Seal gasket.

NOTES

1. 13-1/2" [343 mm] minimum space required between front of foot and rear of anchor to install ZE1203 Series.
2. Minimum "P" dimension attainable = 2" [51 mm]
3. Feet anchored to floor using minimum 1/2" [13 mm] diameter anchors through rear slots on carrier feet.
4. Rear anchor foot required for secure installation. (Not on HD series)

ZE1203-HR4 (Single)

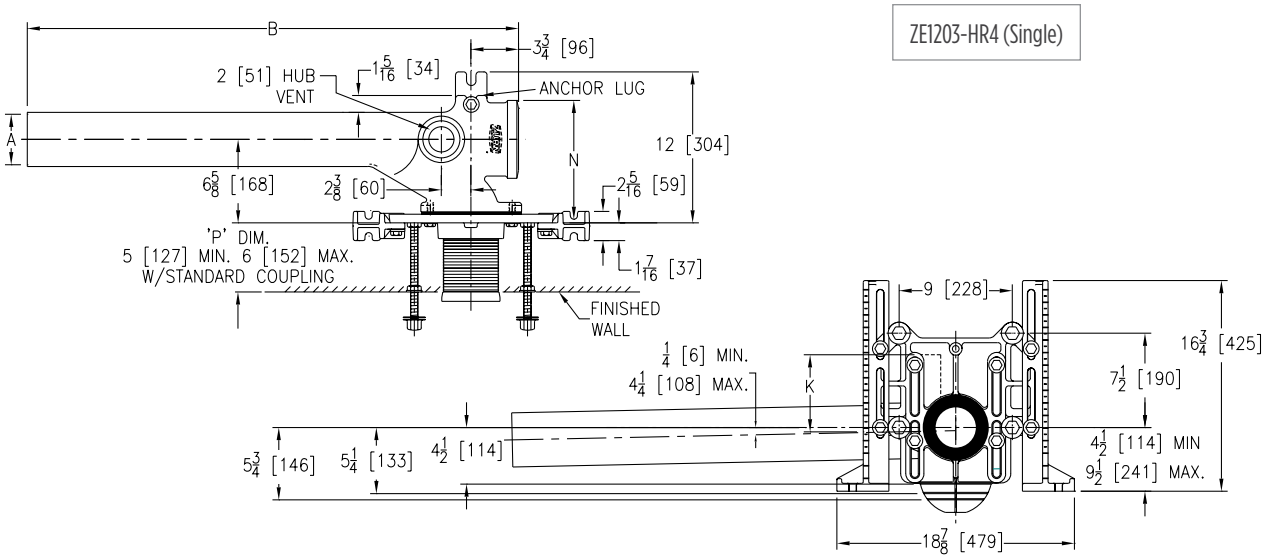

ZE1203-HD4 (Double)

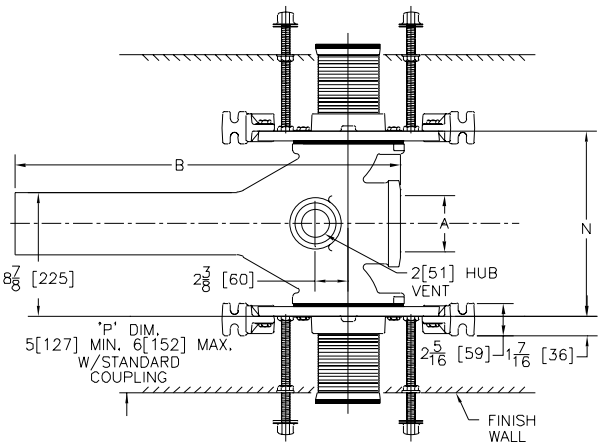

*Regularly furnished unless otherwise specified.

For additional product information, please visit www.zurn.ca

This symbol denotes a product that is engineered to reduce installation and rework time.

For Additional System Tools See "Z1200 Carrier Tools and Accessories" on page 228

⏲ ZE1203-H ADJUSTABLE HORIZONTAL SIPHON JET WITH ELONGATED FITTING – HUB AND SPIGOT SERIES

Product Number	Dimensions in inches [mm]				Approximate Weight lb [kg]
	A	B	K	N	
ZE1203-HL4	4 [102]	36 [914]	6-1/8 [156]	9-13/16 [249]	125 [57]
ZE1203-HR4					
ZE1203-HD4				13-1/4 [337]	144 [65]

PREFIXES	DESCRIPTION	SINGLE	DOUBLE
ZE1203*	D.C.C.I. Elongated Fitting System with 4″ Adjustable Coupling	Combine with Fitting Type for Pricing	
ZEQ1203	D.C.C.I. Elongated Fitting System with NPT Faceplate, Non-Adjustable Coupling		
FITTING TYPE			
-HL4	4″ Caulk, Left-Hand Inlet with Flow Right	1,588.00	-
-HR4	4″ Caulk, Right-Hand Inlet with Flow Left	1,588.00	-
-HD4	4″ Caulk, Back-to-Back Inlet (Double)	-	2,757.00
SUFFIXES			**ADD**
–A	Auxiliary Support Assembly (Required For P-Dim. Greater than 18″)	737.00	1,471.00
–B	Blowout Type Fixture Support	N/C	N/C
–CC	Corrosion Resistant Cast Iron Coupling (6″ to 12″)	50.00	98.00
–CL	Custom length greater than 12″ - Per Inch (Specify Length)	90.00	178.00
–JC	2″ Auxiliary Inlet with Sanitary Sweep	360.00	-
–M	Auxiliary Foot Support (Required For P-Dim. 10″ thru 18″)	277.00	638.00
⏲ –PF	Pre-Fab Foot	N/C	N/C
⏲ –PS	Pre-Fab Slotted Foot	N/C	N/C
⏲ –RYK	Unistrut Pre-Fab Foot	N/C	N/C
–VP	Vandal-Proof Trim	187.00	374.00
–X3	3″ Foot Extension Assembly	90.00	174.00
–X4	4″ Foot Extension Assembly	118.00	226.00
⏲ –45	Finishing Frame for Siphon Jet System (For Blowout System specify -45-B)	73.00	145.00
⏲ –50	Flush Valve Supply Support for Water Closet (Previously Z1210-50)	77.00	152.00
			DEDUCT
–F	Floor Mounted, Back Outlet Fixture Support	-158.00	-311.00

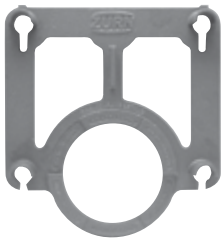

⏲ Z1200-RI-GAUGE

Z1200-CPLGWRNCH-4

⏲ This symbol denotes a product that is engineered to reduce installation and rework time.

For Additional System Tools See "Z1200 Carrier Tools and Accessories" on page 228

**Regularly furnished unless otherwise specified.*

For additional product information, please visit www.zurn.ca

Z1204-H ADJUSTABLE VERTICAL SIPHON JET – HUB AND SPIGOT SERIES

ENGINEERING SPECIFICATION

Zurn Z1204-( ) adjustable, vertical siphon jet water closet provides a rigid system with ( ) size hub and spigot connections and ( ) side inlets. Comes complete with Dura-Coated cast iron right hand or left hand main fitting, 2" [51 mm] vent, adjustable gasketed faceplate, universal floor mounted foot supports, corrosion resistant adjustable polymer coupling with integral test cap, fixture bolts, trim, and stud protectors. Includes rear anchor tie down and bonded Neo-Seal gasket.

NOTES

1. 13-1/4" [337 mm] minimum space required between front of foot and rear of anchor to install Z1204-H4.
2. Minimum "P" dimension attainable = 2" [51 mm].
3. Feet anchored to floor using minimum 1/2" [13 mm] diameter anchors through rear slots on carrier feet.
4. Rear anchor foot required for secure installation.

Product Number	Dimensions in inches [mm]								Approximate Weight lb [kg]
	A	B	D	E	H	J	K	N	
Z1204-H4	4 [102]	-	5 [127]	6-5/8 [168]	-	24 [610]	15-1/2 [394]	9-3/4 [248]	90 [41]
Z1204-HD4	4 [102]		5 [127]	6-5/8 [168]				13-1/4 [337]	134 [61]
Z1204-1HL4	4 [102]	4 [102]	5 [127]	6-5/8 [168]	7-1/2 [191]			9-3/4 [248]	107 [49]
Z1204-1HR4									
Z1204-1HD4	4 [102]	4 [102]	5-1/4 [133]	6-5/8 [168]	7-1/2 [191]			13-1/4 [337]	169 [77]
Z1204-2H4	4 [102]	4 [102]	5 [127]	6-5/8 [168]	7-1/2 [191]			9-3/4 [248]	122 [55]
Z1204-2HD4	4 [102]	4 [102]	5 [127]	6-5/8 [168]	7-1/2 [191]			13-1/4 [337]	172 [78]

Z1204-H (Single)

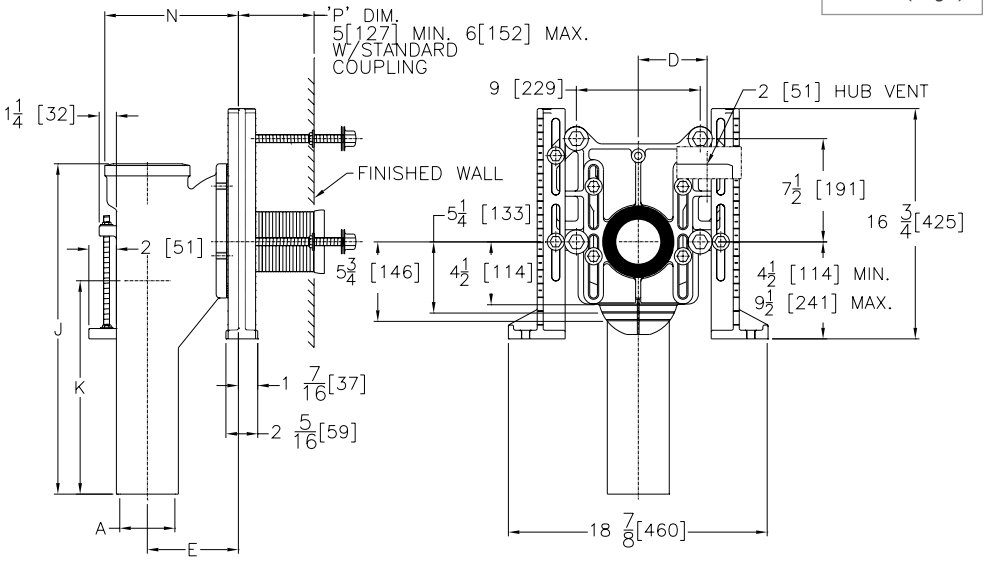

-1HL4-JR-VL Options Shown

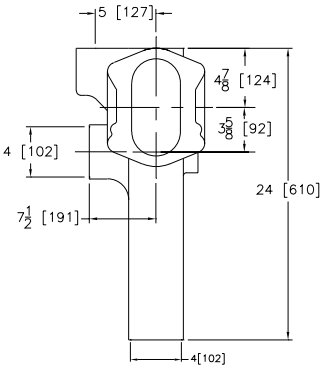

*Regularly furnished unless otherwise specified.

For additional product information, please visit www.zurn.ca

This symbol denotes a product that is engineered to reduce installation and rework time.

For Additional System Tools See "Z1200 Carrier Tools and Accessories" on page 228

Z1204-H ADJUSTABLE VERTICAL SIPHON JET – HUB AND SPIGOT SERIES

PREFIXES	DESCRIPTION	SINGLE	DOUBLE
Z1204*	D.C.C.I. System with 4″ Adjustable Coupling	Combine with Fitting Type for Pricing	
ZQ1204	D.C.C.I. System with NPT Faceplate Non-Adjustable Coupling		
FITTING TYPE			
-H4	4″ Hub/Spigot Stack, Single Inlet, 2″ Right-Hand Vent	1,722.00	-
-HD4	4″ Hub/Spigot Stack, Double Inlet, 2″ Vent	-	2,989.00
-1HL4	4″ Hub/Spigot Stack, Single Inlet, (1) 4″ Left-Hand Side Inlet, 2″ Left-Hand Vent	1,920.00	-
-1HR4	4″ Hub/Spigot Stack, Single Inlet, (1) 4″ Right-Hand Side Inlet, 2″ Right-Hand Vent	1,920.00	-
-1HD4	4″ Hub/Spigot Stack, Double Inlet, (1) 4″ Side Inlet, 2″ Vent	-	2,980.00
-2H4	4″ Hub/Spigot Stack, Single Inlet, (2) 4″ Side Inlets, 2″ Right-Hand Vent	2,083.00	-
-2HD4	4″ Hub/Spigot Stack, Double Inlet, (2) 4″ Side Inlet, 2″ Vent	-	3,027.00

SUFFIXES			ADD
	DESCRIPTION	SINGLE	DOUBLE
–A	Auxiliary Support Assembly (Required For P-Dim. Greater than 18″)	737.00	1,471.00
–B	Blowout Type Fixture Support	N/C	N/C
–CC	Corrosion Resistant Cast Iron Coupling (6″ to 12″)	50.00	98.00
–CL	Custom length greater than 12″- Per Inch (Specify Length)	90.00	178.00
–JL	2″ Left-Hand Auxiliary Inlet	198.00	395.00
–JR	2″ Right-Hand Auxiliary Inlet	198.00	395.00
–M	Auxiliary Foot Support (Required For P-Dim. 10″ thru 18″)	321.00	638.00
⏲ –PF	Pre-Fab Foot	N/C	N/C
⏲ –PS	Pre-Fab Slotted Foot	N/C	N/C
⏲ –RYK	Unistrut Pre-Fab Foot	N/C	N/C
–VP	Vandal-Proof Trim	187.00	374.00
–X3	3″ Foot Extension Assembly	90.00	174.00
–X4	4″ Foot Extension Assembly	118.00	226.00
⏲ –45	Finishing Frame for Siphon Jet System (For Blowout System specify -45-B)	73.00	145.00
⏲ –50	Flush Valve Supply Support for Water Closet (Previously Z1210-50)	77.00	152.00
			DEDUCT
–F	Floor Mounted, Back Outlet Fixture Support	-158.00	-311.00

Z1204-HD (Double)

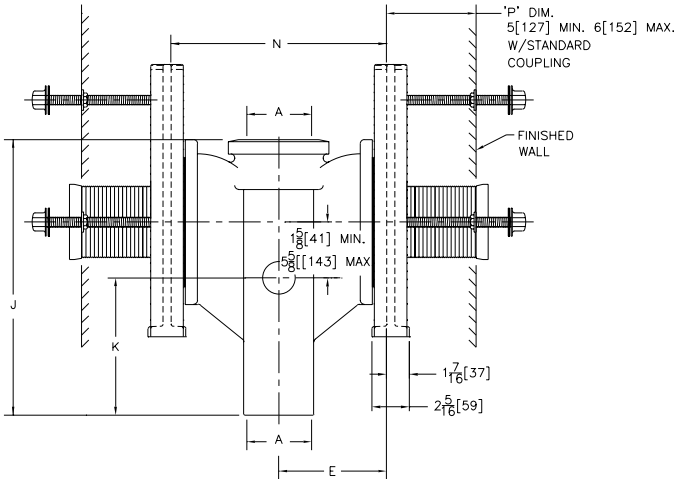

⏲ *This symbol denotes a product that is engineered to reduce installation and rework time.*

For Additional System Tools See "Z1200 Carrier Tools and Accessories" on page 228

**Regularly furnished unless otherwise specified.*

For additional product information, please visit www.zurn.ca

Z1204-N ADJUSTABLE VERTICAL SIPHON JET – NO-HUB SERIES

ENGINEERING SPECIFICATION

Zurn Z1204-( ) adjustable, vertical siphon jet water closet provides rigid system with ( ) size no-hub connections and ( ) side inlets. Comes complete with Dura-Coated cast iron, right-hand, left-hand, or double main fitting, 2" [51 mm] vent, adjustable, gasketed faceplate, universal floor mounted foot supports, corrosion resistant, adjustable polymer coupling with integral test cap, fixture bolts, trim and stud protectors. Includes rear anchor tie down and bonded Neo-Seal gasket.

NOTES

1. Minimum "P" dimension obtainable = 2" [51 mm].
2. 2" [51 mm] no-hub vent connection regularly furnished on right-hand side. Left hand available when specified (Suffix-VL)
3. Auxiliary inlet available right (-JR) or left (-JL) or both sides (-JJ) when specified.
4. Feet bolted to floor using min. 1/2" [13 mm] diameter bolts and back slots on carrier feet.
5. Back anchor foot required for secure installation. (For single carrier only)

Product Number	Dimensions in inches [mm]						Approximate Weight lb [kg]	Notes
	A	B	D	E	H	N		
Z1204-N4	4 [102]	-	5 [127]	6-5/8 [168]	5-1/2 [140]	8-7/8 [225]	80 [36]	2" [51 mm] no-hub vent connection regularly furnished on right-hand side. Left hand available when specified (-VL). 2" auxiliary inlet available right (-JR) or left (-JL), or both side(-JJ) when specified
Z1204-ND4	4 [102]		5 [127]	6-5/8 [168]	5-1/2 [140]	13-1/4 [337]	134 [61]	
Z1204-1NL4	4 [102]	4 [102]	5 [127]	6-5/8 [168]	5-1/2 [140]	8-7/8 [225]	85 [39]	2" [51 mm] no-hub vent located on same side as 3", 4" [102 mm] side inlet 2" [51 mm] no-hub auxiliary inlet located opposite 3", 4" [102 mm] side inlet when specified. (-JL or -JR)
Z1204-1NR4								
Z1204-1NL43		3 [76]						
Z1204-1NR43								
Z1204-1ND4	4 [102]	4 [102]	5 [127]	6-5/8 [168]	5-1/2 [140]	13-1/4 [337]	137 [62]	One 4" [102 mm] side inlet as indicated 2" [51 mm] no-hub auxiliary inlet located opposite 4" [102 mm] side inlet when specified
Z1204-1ND43		3 [76]						
Z1204-2N4	4 [102]	4 [102]	5 [127]	6-5/8 [168]	5-1/2 [140]	8-7/8 [225]	88 40]	2" [51 mm] no-hub vent connection regularly furnished on right side. Left-hand available when specified (-VL)
Z1204-2N43		3 [76]						
Z1204-2ND4	4 [102]	4 [102]	5 [127]	6-5/8 [168]	5-1/2"	13-1/4 [337]	139 [63]	Two 3", 4" [102 mm] side inlets as indicated
Z1204-2ND43		3 [76]						

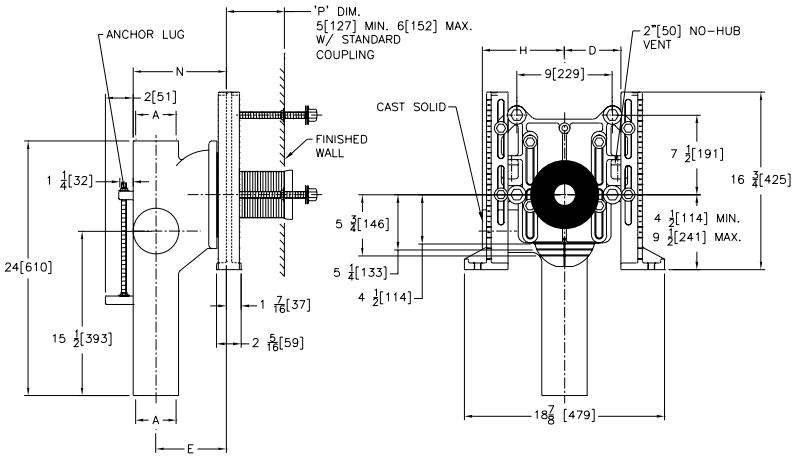

Z1204-N (Single)

*Regularly furnished unless otherwise specified.

For additional product information, please visit www.zurn.ca

This symbol denotes a product that is engineered to reduce installation and rework time.

For Additional System Tools See "Z1200 Carrier Tools and Accessories" on page 228

Z1204-N ADJUSTABLE VERTICAL SIPHON JET – NO-HUB SERIES

PREFIXES	DESCRIPTION	SINGLE	DOUBLE
Z1204*	D.C.C.I. System with 4″ Adjustable Coupling	Combine with Fitting Type for Pricing	
ZQ1204	D.C.C.I. System with NPT Faceplate Non-Adjustable Coupling		
FITTING TYPE			
-N4	4″ No-Hub Stack, Single Inlet, 2″ Right-Hand Vent	1,566.00	-
-ND4	4″ No-Hub Stack, Double Inlet, 2″ Vent	-	2,491.00
-1NL4	4″ No-Hub Stack, Single Inlet, (1) 4″ Left-Hand Side Inlet, 2″ Left-Hand Vent	1,744.00	-
-1NR4	4″ No-Hub Stack, Single Inlet, (1) 4″ Right-Hand Side Inlet, 2″ Right-Hand Vent	1,744.00	-
-1NL43	4″ No-Hub Stack, Single Inlet, (1) 3″ Left-Hand Side Inlet, 2″ Left-Hand Vent	1,744.00	-
-1NR43	4″ No-Hub Stack, Single Inlet, (1) 3″ Right-Hand Side Inlet, 2″ Right-Hand Vent	1,744.00	-
-1ND4	4″ No-Hub Stack, Double Inlet, (1) 4″ Side Inlet, 2″ Vent	-	2,710.00
-1ND43	4″ No-Hub Stack, Double Inlet, (1) 3″ Side Inlet, 2″ Vent	-	2,710.00
-2N4	4″ No-Hub Stack, Single Inlet, (2) 4″ Side Inlets, 2″ Right-Hand Vent	1,897.00	-
-2N43	4″ No-Hub Stack, Single Inlet, (2) 3″ Side Inlets, 2″ Right-Hand Vent	1,897.00	-
-2ND4	4″ No-Hub Stack, Double Inlets, (2) 4″ Side Inlets, 2″ Vent	-	2,863.00
-2ND43	4″ No-Hub Stack, Double Inlets, (2) 3″ Side Inlets, 2″ Vent	-	2,863.00

SUFFIXES			ADD
	DESCRIPTION	SINGLE	DOUBLE
–A	Auxiliary Support Assembly (Required For P-Dim. Greater than 18″)	737.00	1,471.00
–B	Blowout Type Fixture Support	N/C	N/C
–CC	Corrosion Resistant Cast Iron Coupling (6″ to 12″)	50.00	98.00
–CL	Custom length greater than 12″- Per Inch (Specify Length)	90.00	178.00
–JL	2″ Left-Hand Auxiliary Inlet	198.00	395.00
–JR	2″ Right-Hand Auxiliary Inlet	198.00	395.00
–M	Auxiliary Foot Support (Required For P-Dim. 10″ thru 18″)	580.00	638.00
–VP	Vandal-Proof Trim	187.00	374.00
–X3	3″ Foot Extension Assembly	90.00	174.00
–X4	4″ Foot Extension Assembly	118.00	226.00
–45	Finishing Frame for Siphon Jet System (For Blowout System specify -45-B)	79.00	145.00
–50	Flush Valve Supply Support for Water Closet (Previously Z1210-50)	77.00	152.00
			DEDUCT
–F	Floor Mounted, Back Outlet Fixture Support	-158.00	-311.00

Z1204-ND (Double)

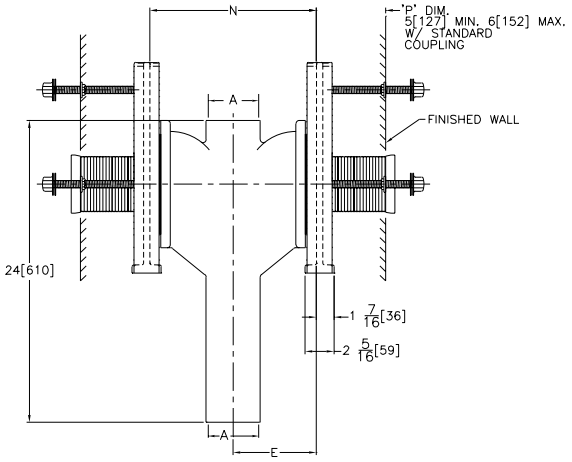

This symbol denotes a product that is engineered to reduce installation and rework time.

For Additional System Tools See "Z1200 Carrier Tools and Accessories" on page 228

**Regularly furnished unless otherwise specified.*

For additional product information, please visit www.zurn.ca

Z1207-N ADJUSTABLE HORIZONTAL HIGH ROUGH-IN SIPHON JET – NO-HUB

ENGINEERING SPECIFICATION

Zurn Z1207-N( ) adjustable, horizontal, high rough-in siphon jet water closet provides a rigid system with 4" [102 mm] size no-hub connections. Comes complete with Dura-Coated cast iron right-hand, left-hand, or double main fitting, with 2" [51 mm] vent, adjustable gasketed faceplate, universal floor mounted foot supports, corrosion resistant adjustable ABS coupling with integral test cap, fixture bolts, trim, and stud protectors. Rear anchor tie down and bonded "Neo-Seal" gasket.

NOTES

1. 13-1/2" [343 mm] minimum space required between front of foot and rear of anchor to install Z1207-N4 Series.
2. Minimum "P" dimension obtainable = 2" [51 mm].
3. Feet anchored to floor using minimum 1/2" [13 mm] diameter anchors through rear slots on carrier feet.
4. Rear anchor foot required for secure installation.

Product Number	Approximate Weight lb [kg]
Z1207-NL4	87 [39]
Z1207-NR4	
Z1207-ND4	115 [52]

PREFIXES	DESCRIPTION	SINGLE	DOUBLE
Z1207*	D.C.C.I. System with 4" Adjustable Coupling	Combine with Fitting Type for Pricing	
ZQ1207	D.C.C.I. System with NPT Faceplate Non-Adjustable Coupling		
FITTING TYPE			
-NR4	4" No-Hub Right-Hand Inlet with Flow to Left	1,498.00	-
-NL4	4" No-Hub Left-Hand Inlet with Flow to Right	1,498.00	-
-ND4	4" No-Hub Back-to-Back Inlet (Double)	-	2,798.00
SUFFIXES			ADD
–A	Auxiliary Support Assembly (Required For P-Dim. Greater than 18")	737.00	1,471.00
–B	Blowout Type Fixture Support	N/C	N/C
–CC	Corrosion Resistant Cast Iron Coupling (6" to 12")	50.00	98.00
–CL	Custom length greater than 12"- Per Inch (Specify Length)	90.00	178.00
–M	Auxiliary Foot Support (Required For P-Dim. 10" thru 18")	277.00	638.00
–VP	Vandal-Proof Trim	187.00	374.00
–X3	3" Foot Extension Assembly	90.00	174.00
–X4	4" Foot Extension Assembly	118.00	226.00
–45	Finishing Frame for Siphon Jet System (For Blowout System specify -45-B)	73.00	145.00
–50	Flush Valve Supply Support for Water Closet (Previously Z1210-50)	77.00	152.00
			DEDUCT
–F	Floor Mounted, Back Outlet Fixture Support	-158.00	-311.00

Z1200-CPLGWRNCH-4

Z1207-NR4 (Single)

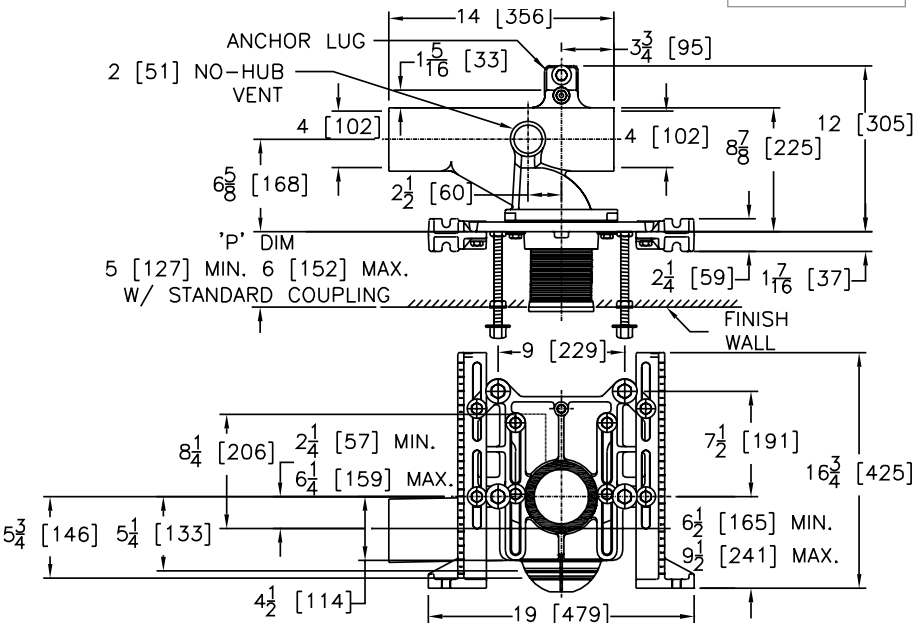

*Regularly furnished unless otherwise specified.

For additional product information, please visit www.zurn.ca

This symbol denotes a product that is engineered to reduce installation and rework time.

For Additional System Tools See "Z1200 Carrier Tools and Accessories" on page 228

Z1208-N VERTICAL SIPHON JET WATER CLOSET SUPPORT SYSTEM – NO-HUB

ENGINEERING SPECIFICATION

Zurn Z1208-N( ) vertical siphon jet water closet provides a rigid system with ( ) size no-hub connections. Comes complete with Dura-Coated cast iron main fitting, separable faceplate rigidly mounted on fitting, universal floor mounted foot supports, corrosion resistant adjustable polymer coupling with integral test cap, fixture bolts, trim, and stud protectors. Includes rear anchor tie down, and bonded Neo-Seal gasket.

NOTES

1. Minimum "P" dimension obtainable = 2" [51 mm].
2. Feet anchored to floor using minimum 1/2" [13 mm] diameter anchors through rear slots on carrier feet.
3. Rear anchor foot required for secure installation.

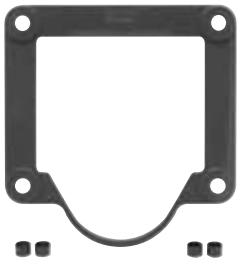

Z1200-FINFRAME-SJ

Product Number	Dimensions in inches [mm]					Approximate Weight lb [kg]
	A	B	C	H	N	
Z1208-N32	3 [76]	18 [457]	2 [51]	4-3/8 [111]	6-1/4 [159]	60 [27]
Z1208-N42	4 [102]	24 [610]		4-7/8 [124]	6-5/8 [168]	70 [32]
Z1208-N44			4 [102]	6-1/2 [165]		72 [33]

PREFIXES	DESCRIPTION	
Z1208*	D.C.C.I. System with 4" Adjustable Coupling	Combine with Fitting Type for Pricing
FITTING TYPE		
-N32	3" No-Hub, 2" No-Hub Vent	1,231.00
-N42	4" No-Hub, 2" No-Hub Vent	1,231.00
-N44	4" No-Hub, 4" No-Hub Vent	1,231.00
SUFFIXES		**ADD**
–A	Auxiliary Support Assembly (Required For P-Dim. Greater than 18")	737.00
–B	Blowout Type Fixture Support	N/C
–CC	Corrosion Resistant Cast Iron Coupling (6" to 12")	50.00
–CL	Custom length greater than 12"- Per Inch (Specify Length)	90.00
–JJ	Two 2" Auxiliary Inlets	400.00
–JL	2" Left-Hand Auxiliary Inlet	198.00
–JR	2" Right-Hand Auxiliary Inlet	198.00
–M	Auxiliary Foot Support (Required For P-Dim. 10" thru 18")	277.00
–VP	Vandal-Proof Trim	187.00
–X3	3" Foot Extension Assembly	90.00
–X4	4" Foot Extension Assembly	118.00
◷ –45	Finishing Frame for Siphon Jet System (For Blowout System specify -45-B)	73.00
◷ –50	Flush Valve Supply Support for Water Closet	77.00
		DEDUCT
–F	Floor Mounted, Back Outlet Fixture Support	-158.00

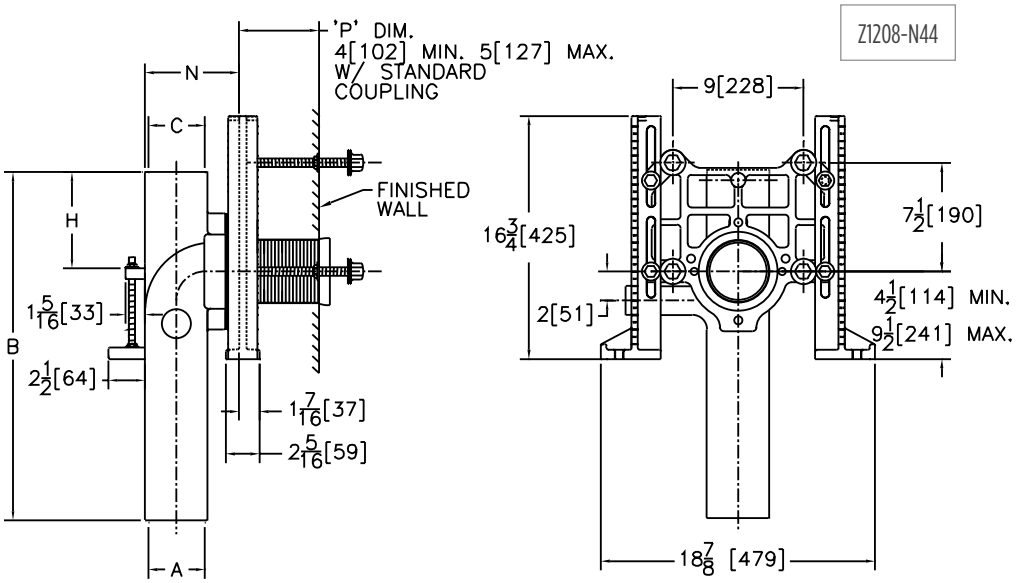

◷ *This symbol denotes a product that is engineered to reduce installation and rework time.*

For Additional System Tools See "Z1200 Carrier Tools and Accessories" on page 228

**Regularly furnished unless otherwise specified.*

For additional product information, please visit www.zurn.ca

Z1208-H VERTICAL SIPHON JET WATER CLOSET SUPPORT SYSTEM – HUB AND SPIGOT

ENGINEERING SPECIFICATION

Zurn Z1208-H( ) vertical siphon jet water closet provides a rigid system with ( ) size hub and spigot connections. Comes complete with Dura-Coated cast iron main fitting, separable faceplate rigidly mounted on fitting, universal floor mounted foot supports, corrosion resistant adjustable polymer coupling with integral test cap, fixture bolts, trim, and stud protectors. Includes rear anchor tie down, and bonded Neo-Seal gasket.

NOTES

1. Minimum "P" dimension obtainable = 2" [51 mm].
2. Feet anchored to floor using minimum 1/2" [13 mm] diameter anchors through rear slots on carrier feet.
3. Rear anchor foot required for secure installation.

Product Number	Dimensions in inches [mm]					Approximate Weight lb [kg]
	A	B	C	H	N	
Z1208-H42	4 [102]	14-3/4 [375]	2 [51]	4-3/8 [111]	6-1/4 [159]	60 [27]
Z1208-H44		15-1/4 [387]	4 [102]	4-7/8 [124]	7-5/16 [186]	63 [29]

PREFIXES	DESCRIPTION	
Z1208*	D.C.C.I. System with 4" Adjustable Coupling	Combine with Fitting Type for Pricing
FITTING TYPE		
-H42	4" Spigot, 2" Hub Vent	1,231.00
-H44	4" Spigot, 4" Hub Vent	1,231.00
SUFFIXES		**ADD**
–B	Blowout Type Fixture Support	N/C
–CC	Corrosion Resistant Cast Iron Coupling (6" to 12")	50.00
–CL	Custom length greater than 12"- Per Inch (Specify Length)	90.00
–JJ	Two 2" Auxiliary Inlets	400.00
–JL	2" Left-Hand Auxiliary Inlet	198.00
–JR	2" Right-Hand Auxiliary Inlet	198.00
–M	Auxiliary Foot Support (Required For P-Dim. 10" - 18")	277.00
–VP	Vandal-Proof Trim	187.00
–X3	3" Foot Extension Assembly	90.00
–X4	4" Foot Extension Assembly (Previously Z1210-29)	118.00
⏲ –45	Finishing Frame for Siphon Jet System (For Blowout System specify -45-B)	73.00
⏲ –50	Flush Valve Supply Support for Water Closet	77.00
		DEDUCT
–F	Floor Mounted, Back Outlet Fixture Support	-158.00

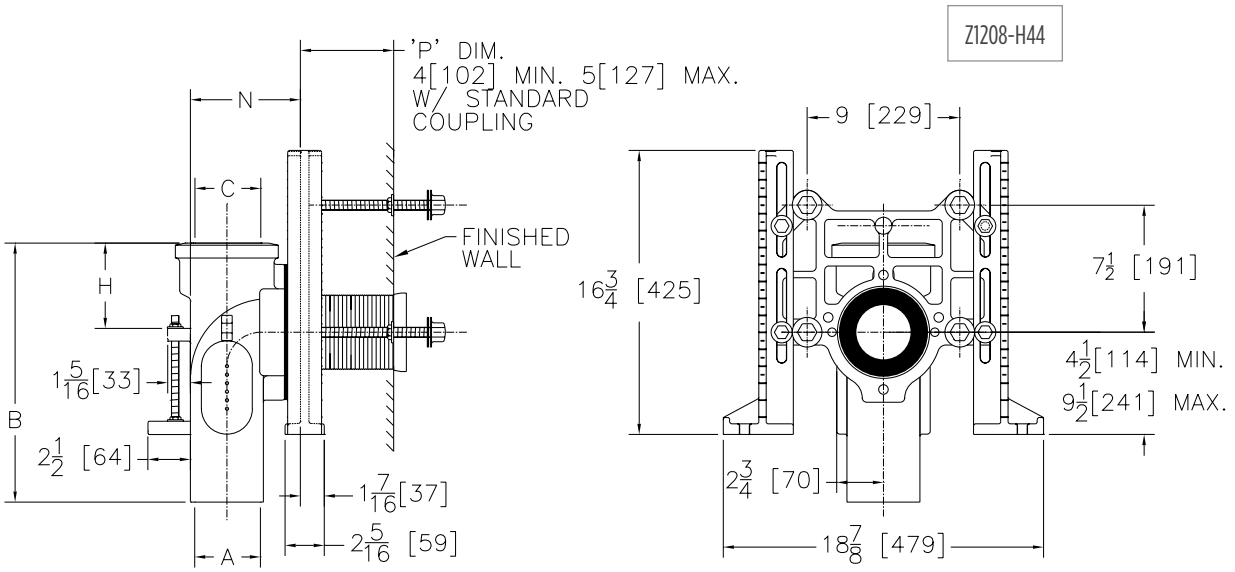

*Regularly furnished unless otherwise specified.

For additional product information, please visit www.zurn.ca

⏲ *This symbol denotes a product that is engineered to reduce installation and rework time.*

For Additional System Tools See "Z1200 Carrier Tools and Accessories" on page 228

Z1209-N VERTICAL OFFSET SIPHON JET WATER CLOSET SUPPORT SYSTEM – NO-HUB

ENGINEERING SPECIFICATION

Zurn Z1209-N( )4 vertical offset siphon jet water closet provides a rigid system with ( ) size no-hub connections and 2" [51 mm] vent. Comes complete with Dura-Coated cast iron main fitting, universal floor mounted supports, adjustable faceplate, corrosion resistant adjustable polymer coupling with integral test cap, fixture bolts, trim, and stud protectors. Includes rear anchor tie down and bonded Neo-Seal gasket.

NOTES

1. Minimum "P" dimension obtainable = 2" [51 mm].
2. Feet anchored to floor using minimum 1/2" [13 mm] diameter anchors through rear slots on carrier feet.
3. Rear anchor foot required for secure installation.

Z1209-NR

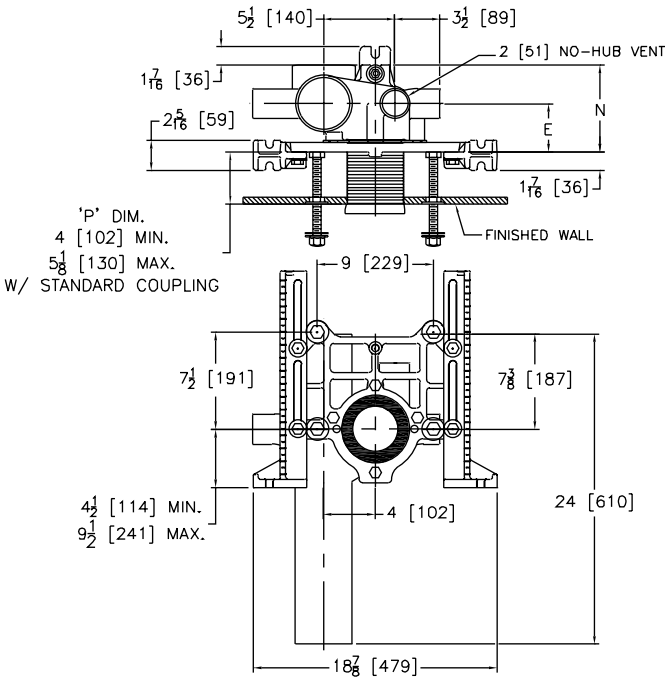

Product Number	Dimensions in inches [mm] A	Dimensions in inches [mm] B	Approximate Weight lb [kg]
Z1209-NL4	3-3/4 [95]	6-3/4 [171]	67 [30]
Z1209-NR4			
Z1209-ND4	4-1/8 [104]	8-1/4 [210]	109 [49]

PREFIXES	DESCRIPTION		
Z1209*	D.C.C.I. System with 4" Adjustable Coupling	Combine with Fitting Type for Pricing	
FITTING TYPE			
-NL4	4" No-Hub Stack, Left-Hand Offset Inlet, 2" Left-Hand Vent	1,267.00	-
-NR4	4" No-Hub Stack, Right-Hand Offset Inlet, 2" Right-Hand Vent	1,267.00	-
-ND4	4" No-Hub Stack, Double Inlet, 2" Vent	-	2,255.00
SUFFIXES			**ADD**
–B	Blowout Type Fixture Support	N/C	N/C
–CC	Corrosion Resistant Cast Iron Coupling (6" to 12")	50.00	98.00
–CL	Coupling Length Greater than 12"- Per Inch (Specify Length)	90.00	178.00
–JJ	Two 2" Auxiliary Inlets	720.00	720.00
–JS	Stack Side 2" Auxiliary Inlet	360.00	360.00
–JV	Vent Side 2" Auxiliary Inlet	360.00	360.00
–M	Auxiliary Foot Support (Required for P-Dim. 10" thru 18")	322.00	641.00
⏲ –PF	Pre-Fab Foot	N/C	N/C
⏲ –PS	Pre-Fab Slotted Foot	N/C	N/C
⏲ –RYK	Unistrut Pre-Fab Foot	N/C	N/C
–VP	Vandal-Proof Trim	187.00	374.00
–X3	3" Foot Extension Assembly	90.00	174.00
–X4	4" Foot Extension Assembly	118.00	226.00
⏲ –45	Finishing Frame for Siphon Jet System (For Blowout System specify -45-B)	73.00	145.00
⏲ –50	Flush Valve Supply Support for Water Closet (Previously Z1210-50)	77.00	152.00
			DEDUCT
–F	Floor Mounted, Back Outlet Fixture Support	-158.00	-311.00

⏲ This symbol denotes a product that is engineered to reduce installation and rework time.

For Additional System Tools See "Z1200 Carrier Tools and Accessories" on page 228

**Regularly furnished unless otherwise specified.*

For additional product information, please visit www.zurn.ca

ZN1209-N VERTICAL OFFSET SIPHON JET – NO-HUB NARROW WALL SYSTEM

ENGINEERING SPECIFICATION

Zurn ZN1209-N( )4 narrow wall vertical offset siphon jet water closet provides a rigid system with 4" [102 mm] size no-hub connection and 2" [51 mm] vent. Comes complete with Dura-Coated cast iron main fitting, separable faceplate rigidly mounted on fitting, universal floor mounted supports, corrosion resistant adjustable ABS coupling with integral test cap, fixture bolts, trim, and stud protectors. Includes rear anchor tie down and bonded Neo-Seal gasket.

NOTES

1. Feet anchored to floor using minimum 1/2" [13 mm] diameter anchors through rear slots on carrier feet.
2. Rear anchor foot required for secure installation.

Product Number	Approximate Weight lb [kg]
ZN1209-NL4	67 [30]
ZN1209-NR4	
ZN1209-ND4	109 [49]

PREFIXES	DESCRIPTION	SINGLE	DOUBLE
ZN1209*	D.C.C.I. System with 4" Adjustable Coupling	Combine with Fitting Type for Pricing	
FITTING TYPE			
-NL4	4" No-Hub Stack, Left-Hand Offset Inlet, 2" Left-Hand Vent	1,267.00	-
-NR4	4" No-Hub Stack, Right-Hand Offset Inlet, 2" Right-Hand Vent	1,267.00	-
-ND4	4" No-Hub Stack, Double Inlet, 2" Vent	-	2,255.00
SUFFIXES			**ADD**
–B	Blowout Type Fixture Support	N/C	N/C
–CC	Corrosion Resistant Cast Iron Coupling (6" to 12")	50.00	88.00
–JJ	Two 2" Auxiliary Inlets	720.00	720.00
–JS	2" Stack Side Auxiliary Inlet	360.00	360.00
–JV	2" Vent Side Auxiliary Inlet	360.00	360.00
–VP	Vandal-Proof Trim	187.00	374.00
–X3	3" Foot Extension Assembly	90.00	174.00
–X4	4" Foot Extension Assembly	118.00	226.00
⏲ –45	Finishing Frame for Siphon Jet System (For Blowout System specify -45-B)	73.00	145.00
⏲ –50	Flush Valve Supply Support for Water Closet (Previously Z1210-50)	77.00	152.00

ZN1209-NL4 (Single)

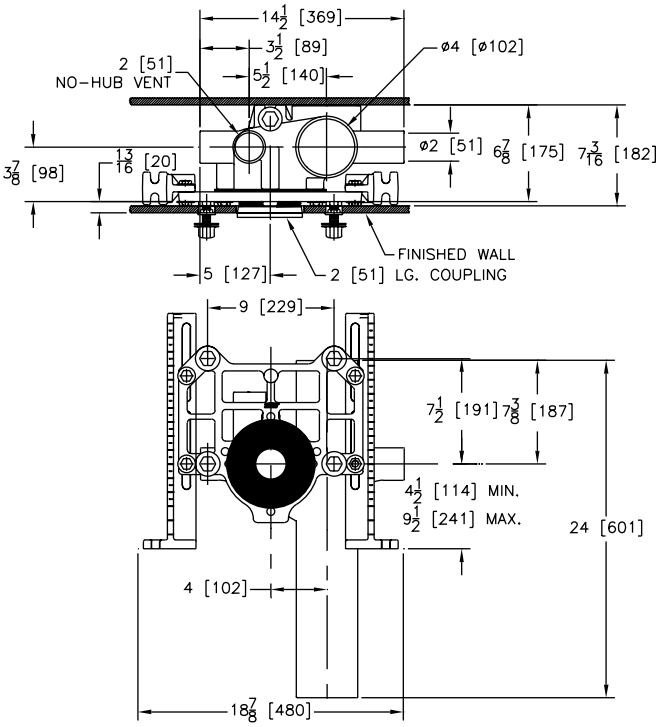

ZN1209-ND4 (Double)

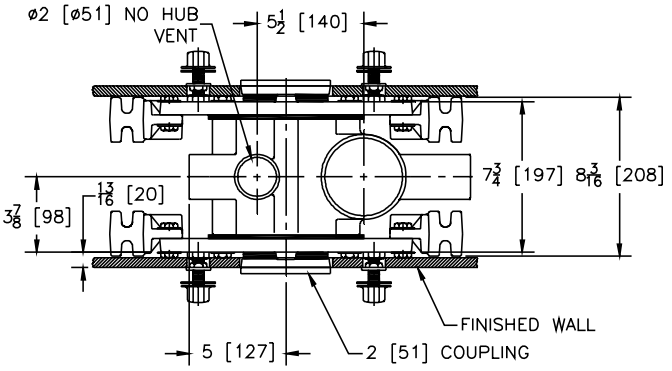

*Regularly furnished unless otherwise specified.

For additional product information, please visit www.zurn.ca

⏲ This symbol denotes a product that is engineered to reduce installation and rework time.

For Additional System Tools See "Z1200 Carrier Tools and Accessories" on page 228

Z1212 WALL CLOSET SUPPORT SYSTEM

ENGINEERING SPECIFICATION

Zurn Z1212 Dura-Coated cast iron wall closet support system comes complete with adjustable faceplate rigidly mounted on reversible foot supports, ABS coupling with integral test cap, fixture bolts, trim, stud protectors, and bonded Neo-Seal gasket.

NOTES

1. For plastic pipe installation, use male thread by socket adaptor – DO NOT THREAD PLASTIC PIPE. (Per ASTM Specification #D2665 X1.6.1.)
2. Piping must be rigidly secured to prevent deflection (by others).

Product Number	Approximate Weight lb [kg]
Z1212	30 [14]

PREFIXES	DESCRIPTION	PIPE SIZE	LIST PRICE
Z1212	D.C.C.I. System with 6″ Adjustable Coupling	4″	1,036.00
SUFFIXES			**ADD**
–B	Adapter for Blowout Type Fixture Support		N/C
–CL	Custom length greater than 12″- Per Inch (Specify Length)		90.00
–F	Floor Mounted, Back Outlet Fixture Support		N/C
–VP	Vandal-Proof Finish Trim		187.00
–X4	4″ Foot Extension Assembly		116.00
⏲ –45	Finishing Frame for Siphon Jet System (For Blowout System specify -45-B)		73.00

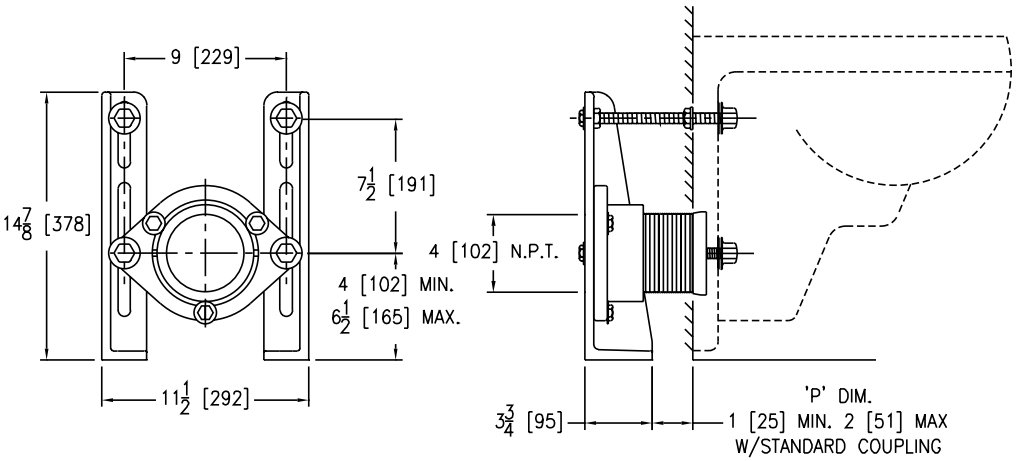

⏲ *This symbol denotes a product that is engineered to reduce installation and rework time.*

For Additional System Tools See "Z1200 Carrier Tools and Accessories" on page 228

**Regularly furnished unless otherwise specified.*

For additional product information, please visit www.zurn.ca

Z1213-N 4" VERTICAL SIPHON JET WATER CLOSET SUPPORT SYSTEM – 2" OR 4" TOP VENT CLOSET FITTING ONLY (NO SUPPORT)

ENGINEERING SPECIFICATION

Zurn Z1213-N4( ) vertical siphon jet water closet provides a rigid system with 4" [102 mm] No-Hub connection and 2" [51 mm] or 4" [102 mm] (specify) top vent connection. Comes complete with Dura-Coated cast iron main fitting, corrosion-resistant, adjustable ABS coupling with integral test cap, bolt kit, and bonded Neo-Seal gasket for floor mounted back outlet water closet. Standard fixture support is not required.

NOTES

Minimum "P" dimension obtainable = 1-1/4" [32 mm].

Product Number	A Vent Size	Approximate Weight lb [kg]
Z1213-N42	2 [51]	19 [9]
Z1213-N44	4 [102]	

PREFIXES	DESCRIPTION	"A" VENT SIZE	LIST PRICE
Z1213*	D.C.C.I. System with 4" Adjustable Coupling	2"	**Combine with Fitting Type for Pricing**
FITTING TYPE			
-N42	4" No-Hub, 2" No-Hub Vent		**1,319.00**
-N44	4" No-Hub, 4" No-Hub Vent		**1,319.00**
SUFFIXES			**ADD**
–CC	Corrosion Resistant Cast Iron Coupling - 6" thru 12" long (Cannot be used with -CL)		**50.00**
–CL	Coupling Length Greater than 12" - Per inch (Cannot be used with -CC)		**104.00**

Z1213-N44

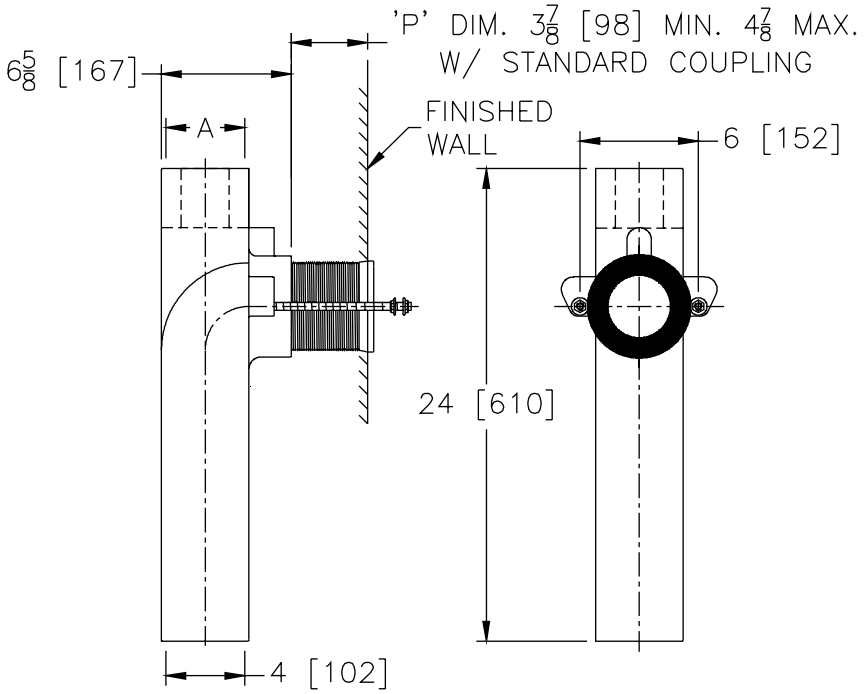

*Regularly furnished unless otherwise specified.

For additional product information, please visit www.zurn.ca

This symbol denotes a product that is engineered to reduce installation and rework time.

For Additional System Tools See "Z1200 Carrier Tools and Accessories" on page 228

Z1216 90° DOUBLE NO-HUB SYSTEM FOR FLOOR MOUNTED BACK OUTLET WATER CLOSETS

ENGINEERING SPECIFICATION

Zurn Z1216 Dura-Coated cast iron 90° water closet features double no-hub fitting with anti-crossover baffles and 2" [51 mm] no-hub center vent for floor mounted, back outlet water closets.

Product Number	Approximate Weight lb [kg]
Z1216	31 [14]

PREFIXES	DESCRIPTION	VENT SIZE	LIST PRICE
Z1216*	D.C.C.I. No-Hub System	2"	**1,258.00**
SUFFIXES			**ADD**
–J	45° Auxiliary Inlet		**360.00**

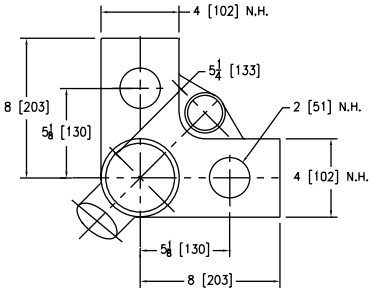

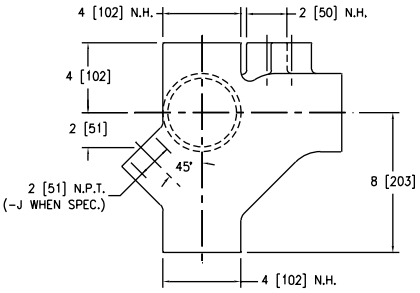

This symbol denotes a product that is engineered to reduce installation and rework time.

For Additional System Tools See "Z1200 Carrier Tools and Accessories" on page 228

**Regularly furnished unless otherwise specified.*

For additional product information, please visit www.zurn.ca

Z1217 COUPLING TYPE SYSTEM – WALL URINAL/SERVICE SINK

ENGINEERING SPECIFICATION

Zurn Z1217 service sink support system with fitting. Complete with Dura-Coated rectangular steel uprights with welded feet, adjustable face plate and upper support plate, Z1208 fitting with 2" [51 mm] vent, corrosion-resistant adjustable ABS coupling with internal test cap, fixture bolts, trim and bonded "Neo-Seal" gasket.

NOTES

Dimensional data for letter dimensions depends on fixture type and manufacturer. See Zurn Carrier/Fixture Rough-In information at www.zurn.ca for specific rough-in dimensions.

Product Number	Outlet inch [mm]	Approximate Weight lb [kg]
Z1217	4 [102]	63 [29]

PREFIXES	DESCRIPTION	VENT SIZE	LIST PRICE
Z1217*	D.C.C.I. No-Hub System with "ZZ" Coupling	2"	**1,866.00**
SUFFIXES			**ADD**
–B	Blow-Out Type Fixture Support		**N/C**
–CC	Corrosion Resistant 6" Long Cast Iron Coupling		**50.00**
–CL	Custom length greater than 6"- Per Inch (Specify Length)		**86.00**
–F4	Z1208 Fitting with 4" Vent		**N/C**
–F32	3" Z1208 Fitting with 4" Vent		**N/C**
–VP	Vandal-Proof Trim		**134.00**
–WS	Wall Support Valve Plate (Specify Valve Name and Number)		**154.00**

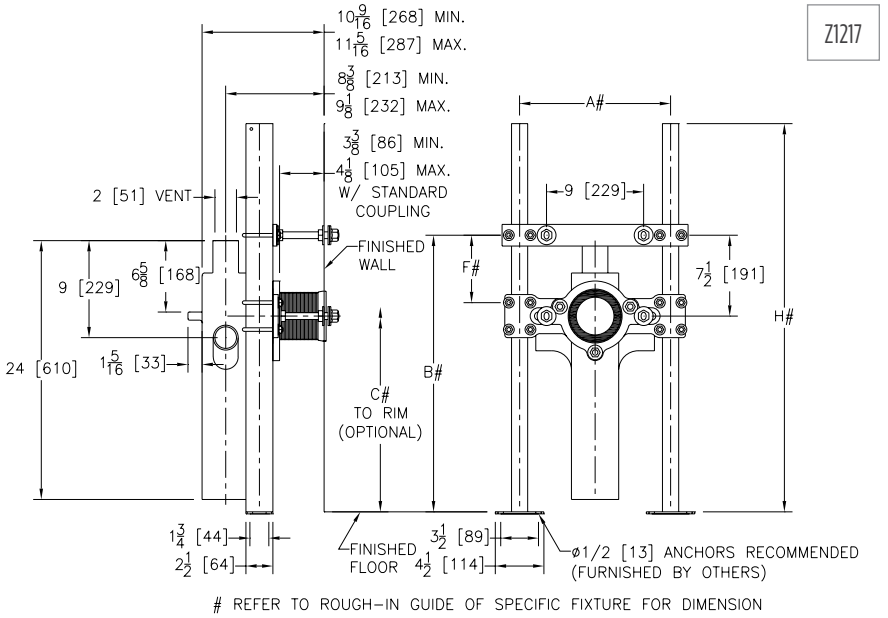

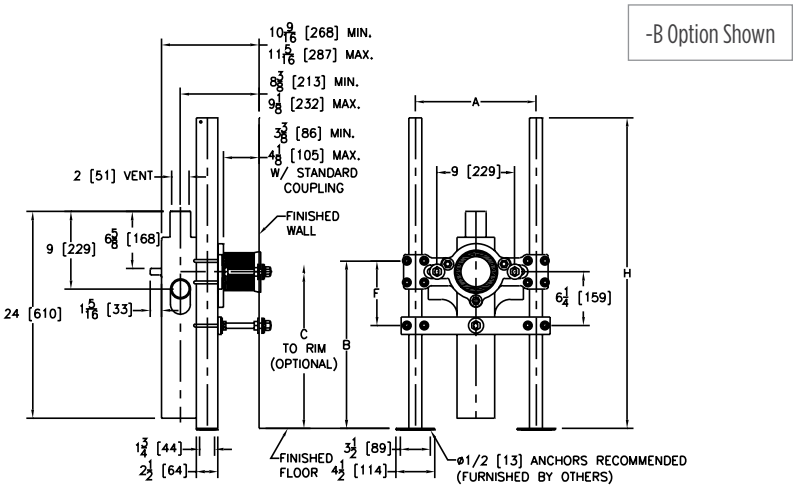

*Regularly furnished unless otherwise specified.

For additional product information, please visit www.zurn.ca

This symbol denotes a product that is engineered to reduce installation and rework time.

For Additional System Tools See "Z1200 Carrier Tools and Accessories" on page 228

Z1218 COUPLING TYPE SYSTEM – WALL URINAL/SERVICE SINK

ENGINEERING SPECIFICATION

Zurn Z1218 service sink support system comes complete with Dura-Coated rectangular steel uprights with welded feet, adjustable faceplate and upper support plate, adjustable corrosion-resistant coupling, fixture bolts, trim, and bonded Neo-Seal gasket.

NOTES

Dimensional data for letter dimensions depends on fixture type and manufacturer. See Zurn Carrier/Fixture Rough-In information at www.zurn.ca for specific rough-in dimensions.

Product Number	Outlet inch [mm]	Approximate Weight lb [kg]
Z1218	3 [76], 4 [102]	63 [29]

PREFIXES	DESCRIPTION	LIST PRICE
Z1218*	Dura-Coated System with Adjustable Coupling	1,437.00
SUFFIXES		**ADD**
–B	Blow-Out Type Fixture Support	N/C
–VP	Vandal-Proof Trim	187.00
–WS	Wall Support Valve Plate (Specify Valve Name and Number)	235.00

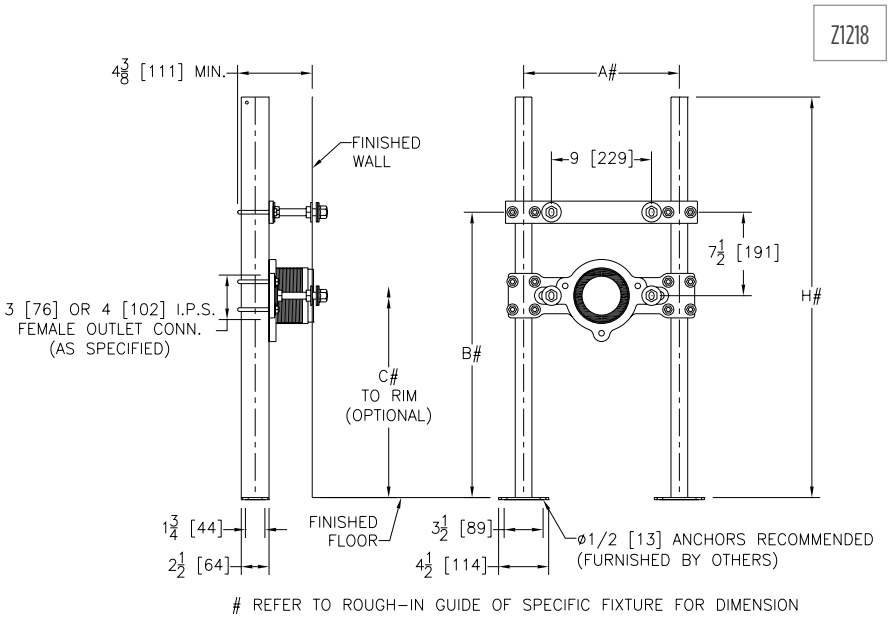

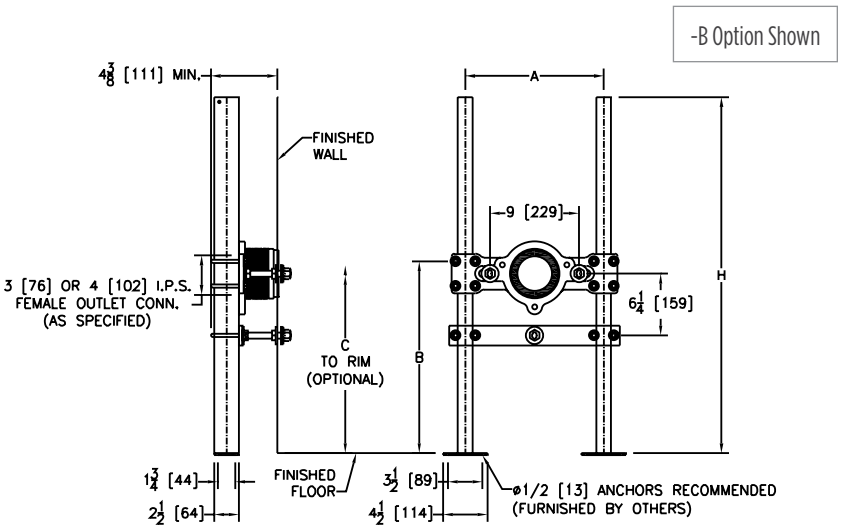

This symbol denotes a product that is engineered to reduce installation and rework time.

For Additional System Tools See "Z1200 Carrier Tools and Accessories" on page 228

**Regularly furnished unless otherwise specified.*

For additional product information, please visit www.zurn.ca

Z1221 PLATE TYPE SYSTEM – WALL URINALS

ENGINEERING SPECIFICATION

Zurn Z1221 wall urinal support system with top support plate comes complete with Dura-Coated rectangular steel uprights with welded feet, adjustable support plate, and mounting fasteners.

NOTES

Dimensional data for letter dimensions depends on fixture type and manufacturer. See Zurn Carrier/Fixture Rough-In information at www.zurn.ca for specific rough-in dimensions.

Product Number	Approximate Weight lb [kg]
Z1221	28 [13]

PREFIXES	DESCRIPTION	SINGLE	DOUBLE
Z1221*	Dura-Coated System with Universal Plate	439.00	561.00
SUFFIXES			**ADD**
–EZ	Easy-to-Install Assembly	POA	POA
–58	Flush Valve Supply Support	77.00	152.00

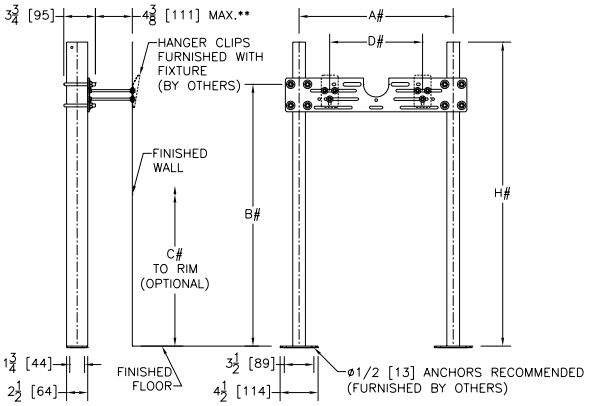

Z1222 PLATE TYPE SYSTEM – WITH BEARING PLATE

ENGINEERING SPECIFICATION

Zurn Z1222 wall urinal support system comes complete with Dura-Coated carbon structural steel rectangular tubing uprights, conforming to ASTM A500 Grade C, with welded base feet having slotted floor anchor holes. Lower bearing plate is vertically adjustable with slot to accommodate bearing jack placement. Upper Universal hanger plate is pre-notched for back spud inlet and designed for various hardware positions and fixtures. Includes mounting fasteners and hardware.

NOTES

Dimensional data for letter dimensions depends on fixture type and manufacturer. See Zurn Carrier/Fixture Rough-In information at www.zurn.ca for specific rough-in dimensions.

Product Number	Approximate Weight lb [kg]
Z1222	30 [14]

PREFIXES	DESCRIPTION	SINGLE	DOUBLE
Z1222*	Dura-Coated System with Universal Plate	505.00	729.00
SUFFIXES			**ADD**
–EZ	Easy-to-Install Assembly	POA	POA
–UA	Urinal Adapter	208.00	413.00
–58	Flush Valve Supply Support	84.00	165.00

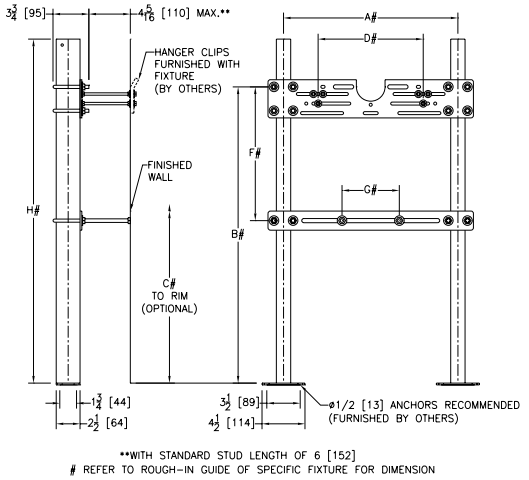

**Regularly furnished unless otherwise specified.*

For additional product information, please visit www.zurn.ca

This symbol denotes a product that is engineered to reduce installation and rework time.

For Additional System Tools See "Z1200 Carrier Tools and Accessories" on page 228

Z1223 PLATE TYPE SYSTEM – TROUGH URINALS

ENGINEERING SPECIFICATION

Zurn Z1223 lavatory support system with top support plate comes complete with Dura-Coated rectangular steel uprights with welded feet, adjustable support plate, and mounting fasteners.

NOTES

Dimensional data for letter dimensions depends on fixture type and manufacturer. See Zurn Carrier/Fixture Rough-In information at www.zurn.ca for specific rough-in dimensions.

Product Number	Approximate Weight lb [kg]
Z1223	33 [15]

PREFIXES	DESCRIPTION	LIST PRICE
Z1223*	Dura-Coated System with Support Plate	1,127.00
SUFFIXES		**ADD**
–1	Longer Urinal (For Ea. 1′ over 5′) Per Foot	333.00
–2	Bearing Plate Assembly	156.00

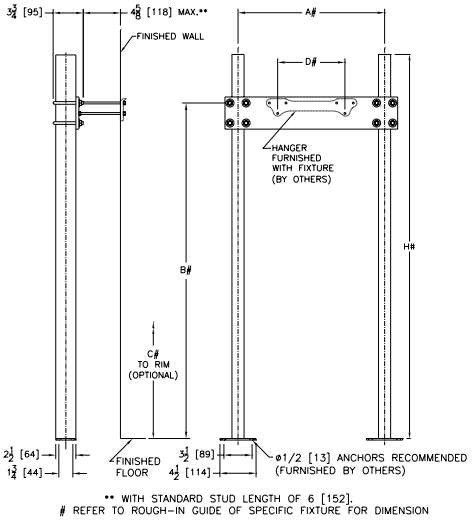

Z1223 (Single)

Z1224 PLATE TYPE SYSTEM – LAVATORY WITH BACK

ENGINEERING SPECIFICATION

Zurn Z1224 lavatory support system with top support plate comes complete with Dura-Coated rectangular steel uprights with welded feet, adjustable support plate, and mounting fasteners.

NOTES

Dimensional data for letter dimensions depends on fixture type and manufacturer. See Zurn Carrier/Fixture Rough-In information at www.zurn.ca for specific rough-in dimensions.

Product Number	Approximate Weight lb [kg]
Z1224	28 [13]
Z1224-D	52 [24]

PREFIXES	DESCRIPTION	SINGLE	DOUBLE
Z1224*	Dura-Coated System with Universal Plate	439.00	-
Z1224-D	Back-to-Back System	-	561.00
SUFFIXES			**ADD**
Ⓛ –CB	Carrier Bank (Per Each)	POA	POA
–D	Back-to-Back System	See Prefix Z1224-D	
Ⓛ –EZ	Easy-to-Install Assembly	POA	POA
–SL	Stud Length Over 6″ - Per Inch (Specify Length)	41.00	84.00
–WS	Wall Support Valve Plate (Specify Valve Name and Number)	235.00	468.00
–2	Bearing Plate Assembly	156.00	305.00

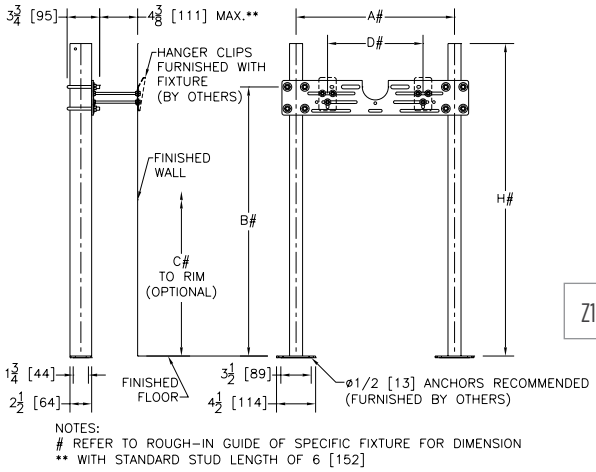

Z1224 (Single)

Ⓛ This symbol denotes a product that is engineered to reduce installation and rework time.

For Additional System Tools See "Z1200 Carrier Tools and Accessories" on page 228

**Regularly furnished unless otherwise specified.*

For additional product information, please visit www.zurn.ca

Z1225 PLATE TYPE SYSTEM – WATER COOLERS

ENGINEERING SPECIFICATION

Zurn Z1225 water cooler support system with top and bottom plates comes complete with Dura-Coated rectangular steel uprights with welded feet, adjustable support plates, and mounting fasteners.

NOTES

Dimensional data for letter dimensions depends on fixture type and manufacturer. See Zurn Carrier/Fixture Rough-In information at www.zurn.ca for specific rough-in dimensions.

Product Number	Approximate Weight lb [kg]
Z1225	30 [14]
Z1225-D	59 [27]

PREFIXES	DESCRIPTION	SINGLE	DOUBLE
Z1225*	Dura-Coated System with Universal Plate	505.00	-
Z1225-D	Back-to-Back System	-	729.00
SUFFIXES			ADD
–BL	Bi-Level Cooler Support	345.00	668.00
–CB	Carrier Bank (Per Each)	POA	POA

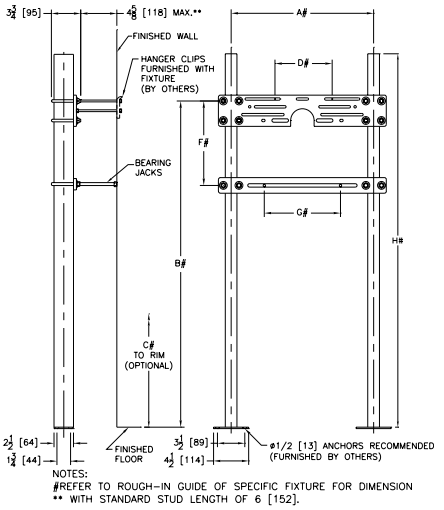

Z1229 PLATE AND EXPOSED ARM – HEAVY SINKS

ENGINEERING SPECIFICATION

Zurn Z1229 heavy sink support system comes complete with Dura-Coated rectangular steel uprights with welded feet, adjustable top support plate, acid resistant epoxy coated exposed arms mounted on cast iron adjustable header, and mounting fasteners.

NOTES

Dimensional data for letter dimensions depends on fixture type and manufacturer. See Zurn Carrier/Fixture Rough-In information at www.zurn.ca for specific rough-in dimensions.

Product Number	Approximate Weight lb [kg]
Z1229	48 [22]

PREFIXES	DESCRIPTION	LIST PRICE
Z1229*	Dura-Coated System with A.R.C. Exposed Arms	2,304.00
SUFFIXES		ADD
–WS	Wall Support Valve Plate (Specify Valve Name and Number)	468.00
–1	Longer Sink - Ea. 1′ over 3′ (Specify Length per Foot)	664.00

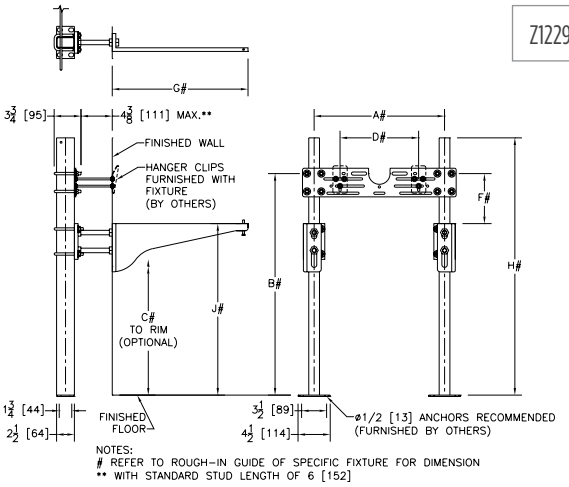

*Regularly furnished unless otherwise specified.

For additional product information, please visit www.zurn.ca

This symbol denotes a product that is engineered to reduce installation and rework time.

For Additional System Tools See "Z1200 Carrier Tools and Accessories" on page 228

Z1231 CONCEALED ARM SYSTEM – WALL LAVATORIES

ENGINEERING SPECIFICATION

Zurn Z1231 lavatory support system with concealed arms comes complete with Dura-Coated rectangular steel uprights with welded feet, cast iron adjustable headers, concealed arms, steel sleeves, alignment truss, and mounting fasteners.

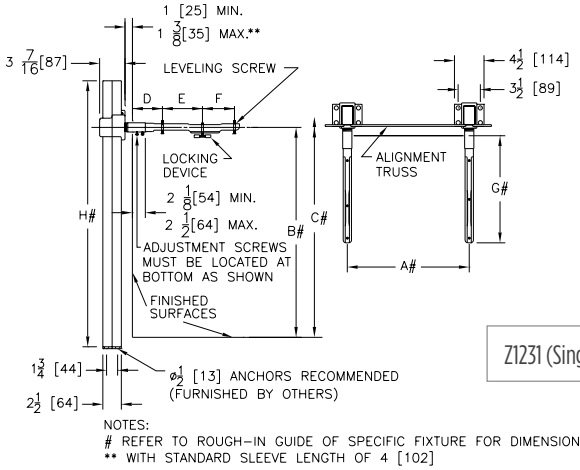

Z1231 (Single)

Product Number	Approximate Weight lb [kg]
Z1231	45 [20]
Z1231-D	63 [29]

PREFIXES	DESCRIPTION	SINGLE	DOUBLE
Z1231*	Dura-Coated System with Concealed Arms	554.00	-
Z1231-D	Back-to-Back System	-	919.00
SUFFIXES			**ADD**
–AL	Adapter Lug	N/C	N/C
⏲ –CB	Carrier Bank (Per Each)	POA	POA
–D	Back-to-Back System	See Prefix Z1231-D	
–E2	Concealed Arm Escutcheons 2″ Long	141.00	282.00
–SL	Sleeve Length Greater Than 4″ (Per Inch) (Specify Length)	41.00	84.00
–WS	Wall Support Valve Plate (Specify Valve Name and Number)	235.00	468.00
–79	ADA Rough-In	N/C	N/C

⏲ Z1231EZ UNIVERSAL LAVATORY CARRIER – WALL LAVATORIES

Patent Pending

ENGINEERING SPECIFICATION

Zurn Z1231-EZ lavatory support system with concealed arms comes complete with Dura-Coated rectangular steel uprights with welded feet, cast iron adjustable headers, concealed arms, steel sleeves, adjusting bars, and mounting fasteners.

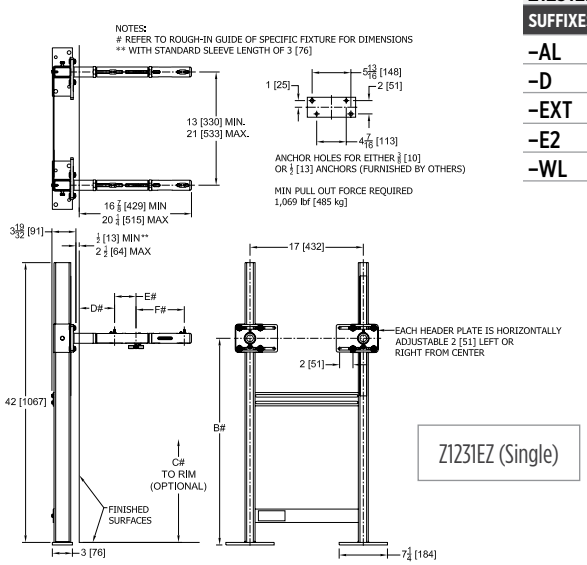

Z1231EZ (Single)

Product Number	Approximate Weight lb [kg]
Z1231-EZ	45 [20]
Z1231-EZD	63 [29]

PREFIXES	DESCRIPTION	SINGLE	DOUBLE
Z1231EZ*	Dura-Coated System with Universal Arms	664.00	-
Z1231EZ-D	Back-to-Back System	-	1,108.00
SUFFIXES			**ADD**
–AL	Adapter Lug	N/C	N/C
–D	Back-to-Back System	See Prefix Z1231-EZ-D	
–EXT	Extension Sleeve 3″-5″[76mm-127mm]	N/C	N/C
–E2	Concealed Arm Escutcheons 2″ Long	141.00	282.00
–WL	Waste Line Sleeve	N/C	N/C

⏲ This symbol denotes a product that is engineered to reduce installation and rework time.

For Additional System Tools See "Z1200 Carrier Tools and Accessories" on page 228

**Regularly furnished unless otherwise specified.*

For additional product information, please visit www.zurn.ca

Z1236 EXPOSED ARM SYSTEM – WALL LAVATORIES/SINKS

ENGINEERING SPECIFICATION

Zurn Z1236 lavatory support system with exposed arms comes complete with Dura-Coated rectangular steel uprights with welded feet, cast iron adjustable headers, acid resistant epoxy coated cast iron arms, alignment truss, and mounting fasteners.

NOTES

Dimensional data for letter dimensions depends upon fixture type and manufacturer. See Zurn Carrier Code Book at www.zurn.ca for specific rough-in dimensions.

Product Number	Approximate Weight lb [kg]
Z1236	60 [27]
Z1236-D	71 [32]

PREFIXES	DESCRIPTION	SINGLE	DOUBLE
Z1236*	Dura-Coated System with A.R.C. Exposed Arms	**1,171.00**	**-**
Z1236-D	Back-to-Back System	**-**	**1,812.00**
SUFFIXES			**ADD**
–AL	Adapter Lug	**N/C**	**N/C**
–D	Back-to-Back System	**See Prefix Z1236-D**	
–WS	Wall Support Valve Plate (Specify Valve Name and Number)	**235.00**	**468.00**

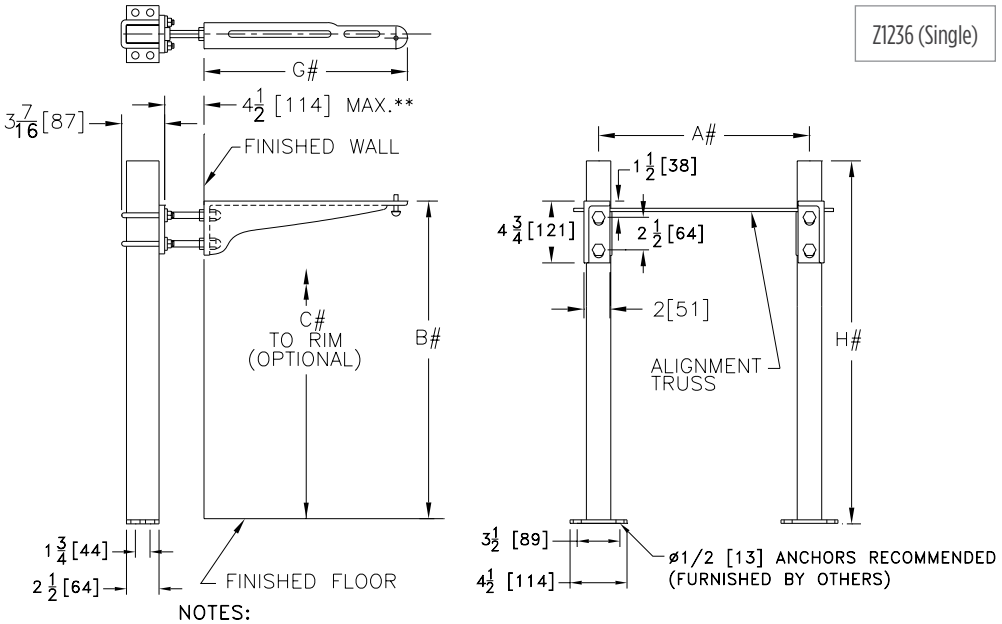

NOTES:
#REFER TO ROUGH–IN GUIDE OF SPECIFIC FIXTURE FOR DIMENSION
** WITH STANDARD STUD LENGTH OF 6 [152].

*Regularly furnished unless otherwise specified.

This symbol denotes a product that is engineered to reduce installation and rework time.

For Additional System Tools See "Z1200 Carrier Tools and Accessories" on page 228

Z1251 CONCEALED ARM SYSTEM – WALL SUPPORTED

ENGINEERING SPECIFICATION

Zurn Z1251 lavatory support system with concealed arms comes complete with Dura-Coated support plate with integral steel arm sleeves, concealed arms, and mounting fasteners.

Product Number	Approximate Weight lb [kg]
Z1251	18 [8]

PREFIXES	DESCRIPTION	LIST PRICE
Z1251*	Dura-Coated System with Concealed Arms	360.00
SUFFIXES		**ADD**
–E2	Concealed Arm Escutcheons 2″ Long	235.00
–79	ADA Rough-In	N/C

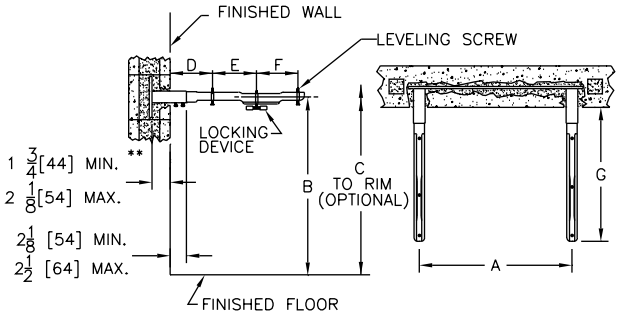

Z1253 ADJUSTABLE CONCEALED ARM SYSTEM – WALL SUPPORTED

ENGINEERING SPECIFICATION

Zurn Z1253 lavatory support system with concealed arms comes complete with adjustable Dura-Coated support plates with arm sleeves, concealed arms, and mounting fasteners.

Product Number	Approximate Weight lb [kg]
Z1253	18 [8]

PREFIXES	DESCRIPTION	LIST PRICE
Z1253*	Dura-Coated System with Concealed Arms	491.00
SUFFIXES		**ADD**
–79	ADA Rough-In	N/C

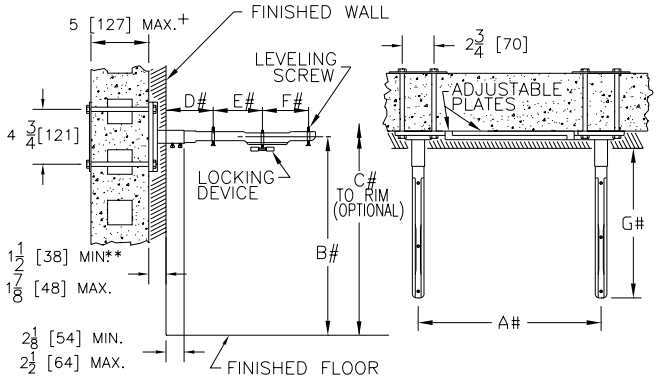

NOTE:
** WITH STANDARD SLEEVE LENGTH OF 4 [102]
+ WITH STANDARD STUD LENGTH OF 6 [152]
# REFER TO ROUGH–IN GUIDE OF SPECIFIC FIXTURE FOR DIMENSION

This symbol denotes a product that is engineered to reduce installation and rework time.

For Additional System Tools See "Z1200 Carrier Tools and Accessories" on page 228

**Regularly furnished unless otherwise specified.*

For additional product information, please visit www.zurn.ca

Z1255 EXPOSED ARM SYSTEM – WALL SUPPORTED

ENGINEERING SPECIFICATION

Zurn Z1255 lavatory support system with exposed arms comes complete with adjustable Dura-Coated support plates, acid resistant epoxy coated cast iron exposed arms, and mounting fasteners.

NOTES

Dimensional data for letter dimensions depends upon fixture type and manufacturer. See Zurn Carrier Code Book at www.zurn.ca for specific rough-in dimensions.

Product Number	Approximate Weight lb [kg]
Z1255	25 [11]

PREFIXES	DESCRIPTION	LIST PRICE
Z1255*	Dura-Coated System with A.R.C. Exposed Arms	1,114.00
SUFFIXES		**ADD**
–BS	Bar Support Valve Plate (Specify Valve Name and Number)	235.00
–SL	Stud Length Over 6" - Per Inch (Specify Length)	41.00
–VP	Vandal-Proof Trim	237.00

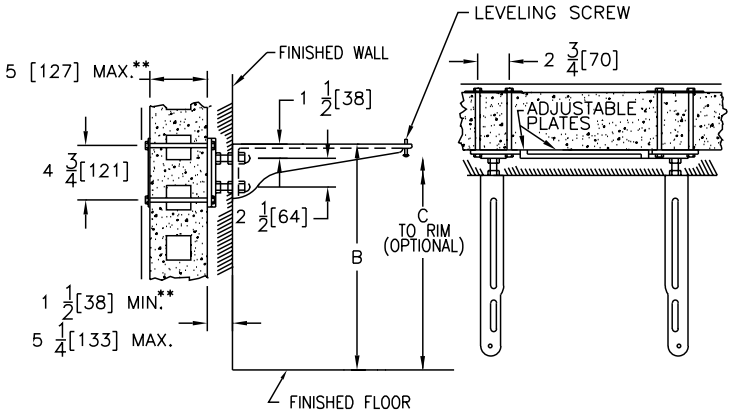

*Regularly furnished unless otherwise specified.

For additional product information, please visit www.zurn.ca

This symbol denotes a product that is engineered to reduce installation and rework time.

For Additional System Tools See "Z1200 Carrier Tools and Accessories" on page 228

Z1256 EXPOSED ARM SYSTEM – WALL SUPPORTED

ENGINEERING SPECIFICATION

Zurn Z1256 lavatory support with exposed arms comes complete with Dura-Coated support plates, acid resistant epoxy coated cast iron exposed arms, and mounting fasteners.

NOTES

Dimensional data for letter dimensions depends upon fixture type and manufacturer. See Zurn Carrier Code Book at www.zurn.ca for specific rough-in dimensions.

Product Number	Approximate Weight lb [kg]
Z1256	25 [11]

PREFIXES	DESCRIPTION	LIST PRICE
Z1256*	Dura-Coated System with A.R.C. Exposed Arms	982.00
SUFFIXES		**ADD**
–BS	Bar Support Valve Plate (Specify Valve Name and Number)	235.00
–SL	Stud Length Over 6″ - Per Inch (Specify Length)	41.00
–VP	Vandal-Proof Trim	237.00

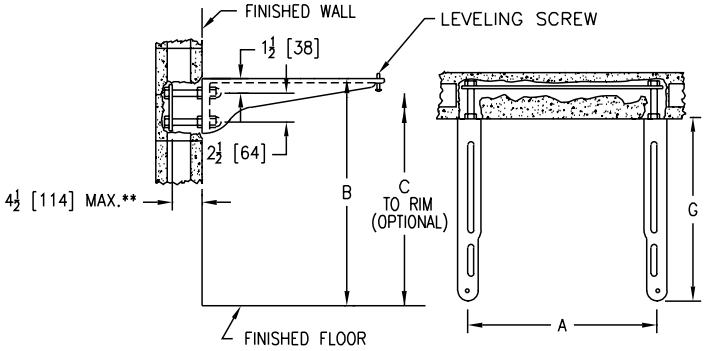

** WITH STANDARD STUD LENGTH OF 6 [152]

Z1257 EXPOSED ARM SYSTEM – WALL SUPPORTED

ENGINEERING SPECIFICATION

Zurn Z1257 wall supported, exposed arm system features Dura-Coated wall plate securing assembly with acid resistant epoxy coated cast iron exposed arms and mounting fasteners.

NOTES

Dimensional data for letter dimensions depends upon fixture type and manufacturer. See Zurn Carrier Code Book at www.zurn.ca for specific rough-in dimensions.

Product Number	Approximate Weight lb [kg]
Z1257	25 [11]

PREFIXES	DESCRIPTION	LIST PRICE
Z1257*	Dura-Coated System with A.R.C. Exposed Arms	1,050.00
SUFFIXES		**ADD**
–BS	Bar Support Valve Plate (Specify Valve Name and Number)	235.00
–SL	Stud Length Over 6″ - Per Inch (Specify Length)	41.00
–VP	Vandal-Proof Trim	237.00

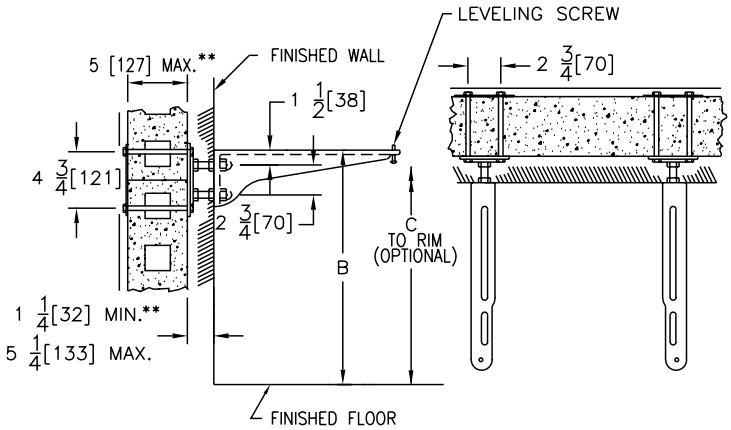

This symbol denotes a product that is engineered to reduce installation and rework time.

For Additional System Tools See "Z1200 Carrier Tools and Accessories" on page 228

**Regularly furnished unless otherwise specified.*

For additional product information, please visit www.zurn.ca

Z1258 EXPOSED ARM SYSTEM – WALL SUPPORTED

ENGINEERING SPECIFICATION

Zurn Z1258 lavatory support system with exposed arms comes complete with adjustable Dura-Coated support plates, acid resistant epoxy coated cast iron exposed arms, and mounting fasteners.

NOTES

Dimensional data for letter dimensions depends upon fixture type and manufacturer. See Zurn Carrier Code Book at www.zurn.ca for specific rough-in dimensions.

Product Number	Approximate Weight lb [kg]
Z1258	25 [11]

PREFIXES	DESCRIPTION	LIST PRICE
Z1258*	Dura-Coated System with A.R.C. Exposed Arms	631.00
SUFFIXES		**ADD**
–BS	Bar Support Valve Plate (Specify Valve Name and Number)	235.00
–SL	Stud Length Over 6" - Per Inch (Specify Length)	41.00
–VP	Vandal-Proof Trim	237.00

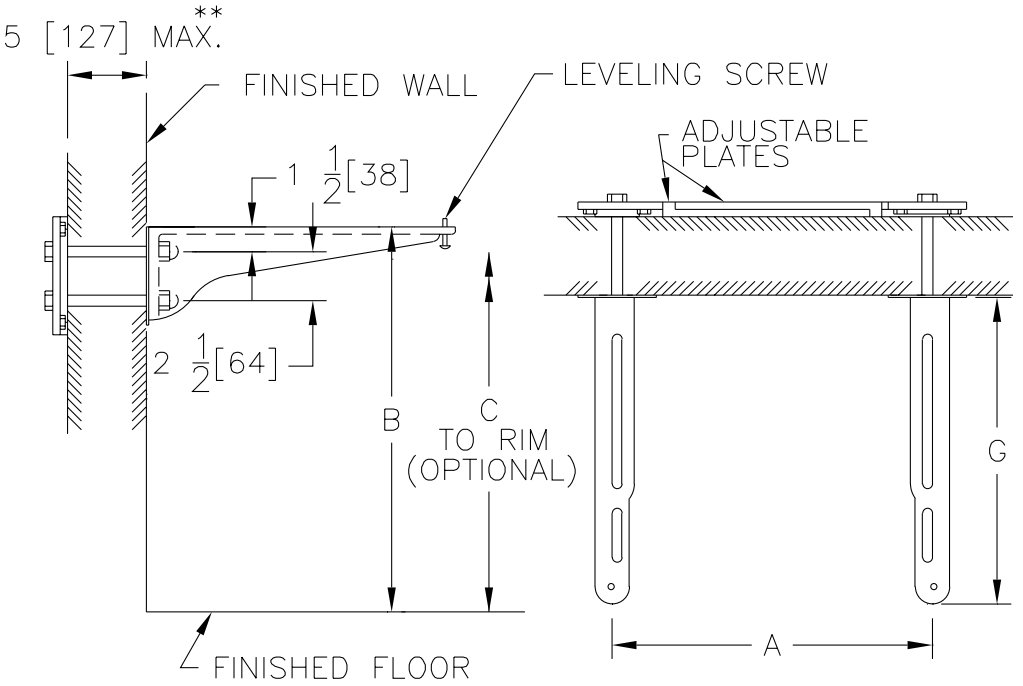

*Regularly furnished unless otherwise specified.

For additional product information, please visit www.zurn.ca

This symbol denotes a product that is engineered to reduce installation and rework time.

For Additional System Tools See "Z1200 Carrier Tools and Accessories" on page 228

Z1259 PLATE SYSTEM – WALL SUPPORTED

ENGINEERING SPECIFICATION

Zurn Z1259 lavatory support system comes complete with Dura-Coated support plate(s) and mounting fasteners.

NOTES

Dimensional data for letter dimensions depends upon fixture type and manufacturer. See Zurn Carrier Code Book at www.zurn.ca for specific rough-in dimensions.

Product Number	Approximate Weight lb [kg]
Z1259	6 [3]
Z1259-BP	24 [11]
Z1259-D	12 [5]
Z1259-DB	24 [11]
Z1259-SP	12 [5]
Z1259-2	

PREFIXES	DESCRIPTION	SINGLE	DOUBLE
Z1259*	Dura-Coated Plate System	Combine with Plate Type for Pricing	
PLATE TYPE			
	Top Back Plate with Studs Only	222.00	-
-BP	Top Front and Back Plates with Studs and Bottom Front and Back Plates with Bearing Jacks	388.00	-
-D	Back-to-Back Top Front Plates with Studs Only	-	268.00
-DB	Back-to-Back Top Front Plates with Studs and Bottom Front Plates with Bearing Jacks	-	446.00
-SP	Top Front and Back Plate with Studs Only	268.00	-
-2	Top Back Plate with Studs and Bottom Back Plate with Bearing Jacks	352.00	-
SUFFIXES			**ADD**
–SL	Stud Length Over 6″ - Per Inch (Specify Length)	58.00	112.00

Z1259

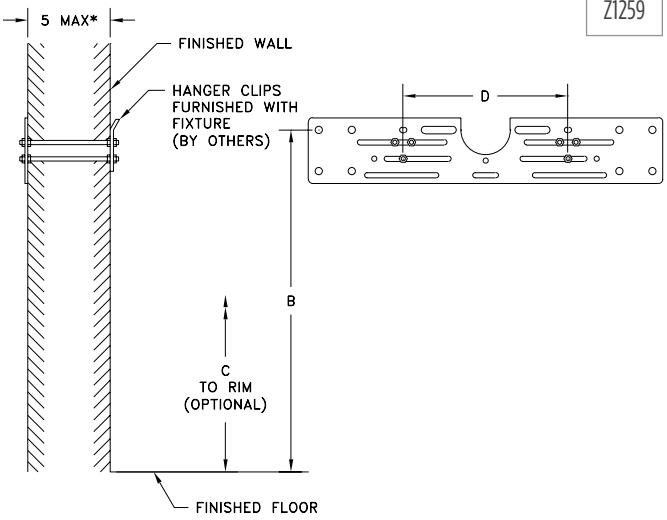

Z1259-BP

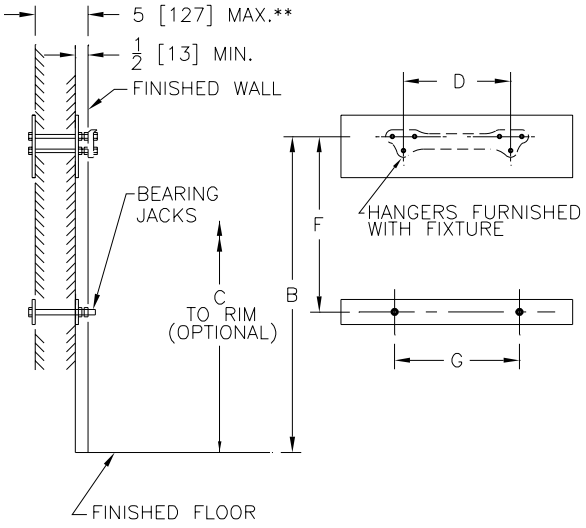

Z1259-2

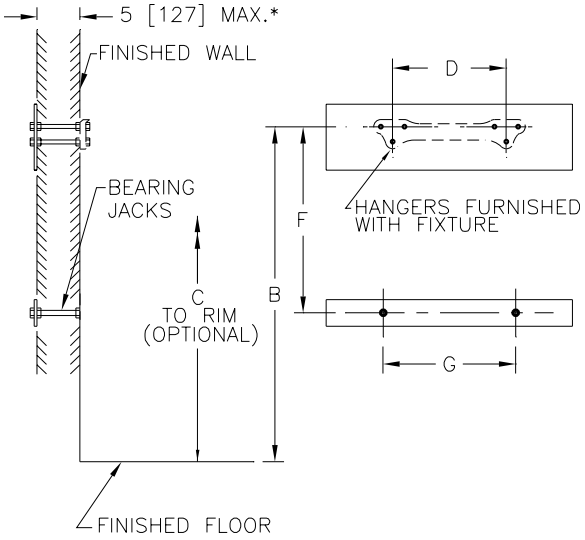

This symbol denotes a product that is engineered to reduce installation and rework time.

For Additional System Tools See "Z1200 Carrier Tools and Accessories" on page 228

**Regularly furnished unless otherwise specified.*

For additional product information, please visit www.zurn.ca

Z1280 WOOD STUD SUPPORTED WATER CLOSET CARRIER – NO-HUB

ENGINEERING SPECIFICATION

Zurn Z1280-N( ) residential water closet support system comes complete with Dura-Coated cast iron 3" [76 mm] or 4" [102 mm] no-hub fitting (specify size) with 2" [51 mm] vent, support brackets, corrosion-resistant ABS coupling, fixture bolts and trim, and bonded Neo Seal gasket.

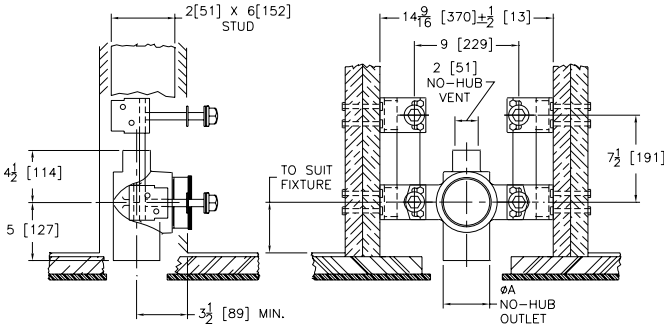

Product Number	A Pipe Size Inches [mm]	Approximate Weight lb [kg]
Z1280-N3-2	3 [76]	30 [14]
Z1280-N4-2	4 [102]	40 [18]

FITTING TYPE		
-N3-2	3" No-Hub Fitting with 2" Vent	678.00
-N4-2	4" No-Hub Fitting with 2" Vent	932.00
SUFFIXES		**ADD**
–X4	4" Foot Extension (For -Y Only)	118.00
–Y	Foot Support System	301.00

Z1282 WOOD STUD SUPPORTED WATER CLOSET CARRIER – HUB AND SPIGOT

ENGINEERING SPECIFICATION

Zurn Z1282-H( ) residential water closet support system comes complete with Dura-Coated cast iron 4" [102 mm] spigot outlet fitting with 2" [51 mm] or 4" [102 mm] hub vent connection, support brackets, corrosion-resistant ABS coupling, fixture bolts and trim, and bonded Neo Seal gasket.

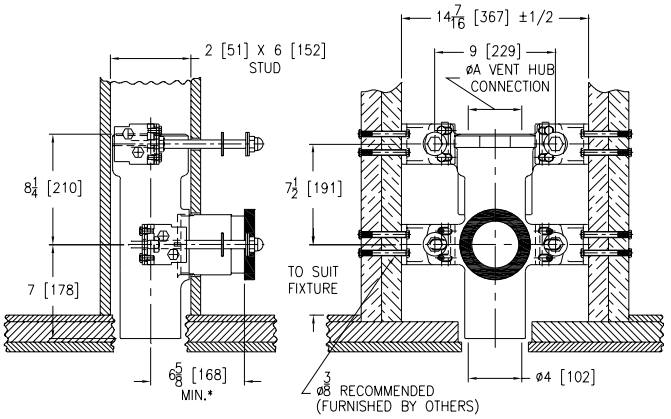

Product Number	Outlet inch [mm]	Approximate Weight lb [kg]
Z1282-H4	4 [102]	42 [19]
Z1282-HD4	4 [102]	54 [24]

PREFIXES	DESCRIPTION	SINGLE	DOUBLE
Z1282*	Dura-Coated Bracket and Fitting System	Combine with Fitting Type for Pricing	
FITTING TYPE			
-H4	4" Spigot Outlet Fitting with 4" Hub Vent Connection	932.00	-
SUFFIXES			**ADD**
–X4	4" Foot Extension (For -Y Only)		118.00
–Y	Foot Support System		301.00

**Regularly furnished unless otherwise specified.*

For additional product information, please visit www.zurn.ca

This symbol denotes a product that is engineered to reduce installation and rework time.

For Additional System Tools See "Z1200 Carrier Tools and Accessories" on page 228

Z1283 WOOD STUD SUPPORTED WATER CLOSET CARRIER – PLASTIC PIPE

ENGINEERING SPECIFICATION

Zurn Z1283 residential water closet support system comes complete with Dura-Coated support brackets and coupling support, ABS coupling, fixture bolts, trim, and bonded Neo-Seal gasket.

Product Number	Approximate Weight lb [kg]
Z1283-P3	25 [11]

PREFIXES	DESCRIPTION	LIST PRICE
Z1283-P3*	Dura-Coated Bracket System with 3″ Yoke	578.00
SUFFIXES		**ADD**
–X4	4″ Carrier Foot Extension (For -Y Only)	118.00
–Y	Foot Support System	301.00

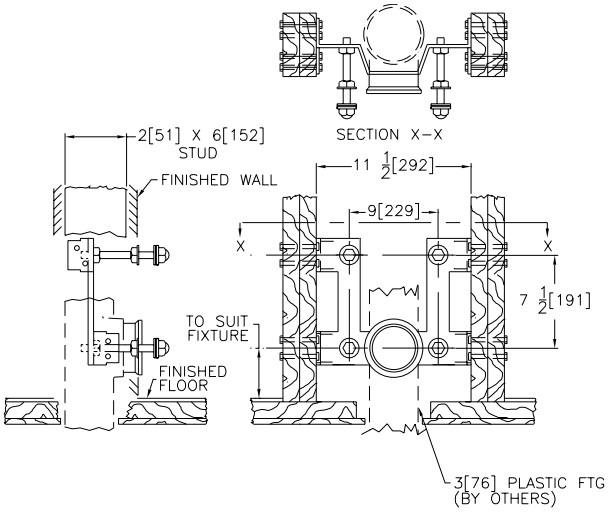

Z1284 CONCRETE FLOOR SUPPORTED WATER CLOSET CARRIER

ENGINEERING SPECIFICATION

Zurn Z1284 4″ [102 mm] residential water closet support system comes complete with Dura-Coated cast iron 4″ [102 mm] no-hub fitting, 2″ [51 mm] vent, support feet, corrosion-resistant ABS coupling, fixture bolts and trim, and bonded Neo-Seal gasket.

Product Number	Approximate Weight lb [kg]
Z1284-N4	40 [18]

PREFIXES	DESCRIPTION	LIST PRICE
Z1284-N4*	Dura-Coated Bracket System with 4″ No-Hub Fitting	1,223.00
SUFFIXES		**ADD**
–X4	4″ Foot Extension Assembly	118.00

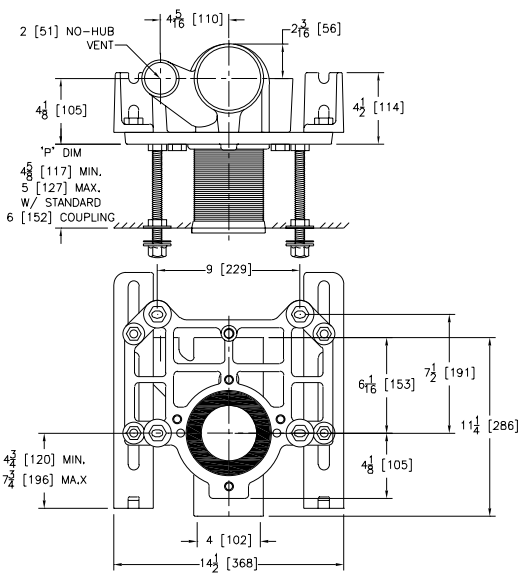

This symbol denotes a product that is engineered to reduce installation and rework time.

For Additional System Tools See "Z1200 Carrier Tools and Accessories" on page 228

**Regularly furnished unless otherwise specified.*

For additional product information, please visit www.zurn.ca

Z1285 WOOD STUD SUPPORTED WATER CLOSET CARRIER

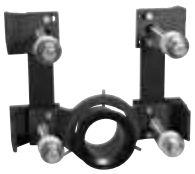

ENGINEERING SPECIFICATION

Zurn Z1285 residential water closet support system comes complete with Dura-Coated support brackets and coupling support, ABS coupling, fixture bolts, trim, and bonded Neo-Seal gasket.

Product Number	Approximate Weight lb [kg]
Z1285	25 [11]

PREFIXES	DESCRIPTION	LIST PRICE
Z1285*	Dura-Coated Bracket System	578.00
SUFFIXES		**ADD**
–PD3	3″ Double Plastic Pipe Connection	1,017.00
–X4	4″ Foot Extension (For -Y Only)	118.00
–Y	Foot Support System	354.00

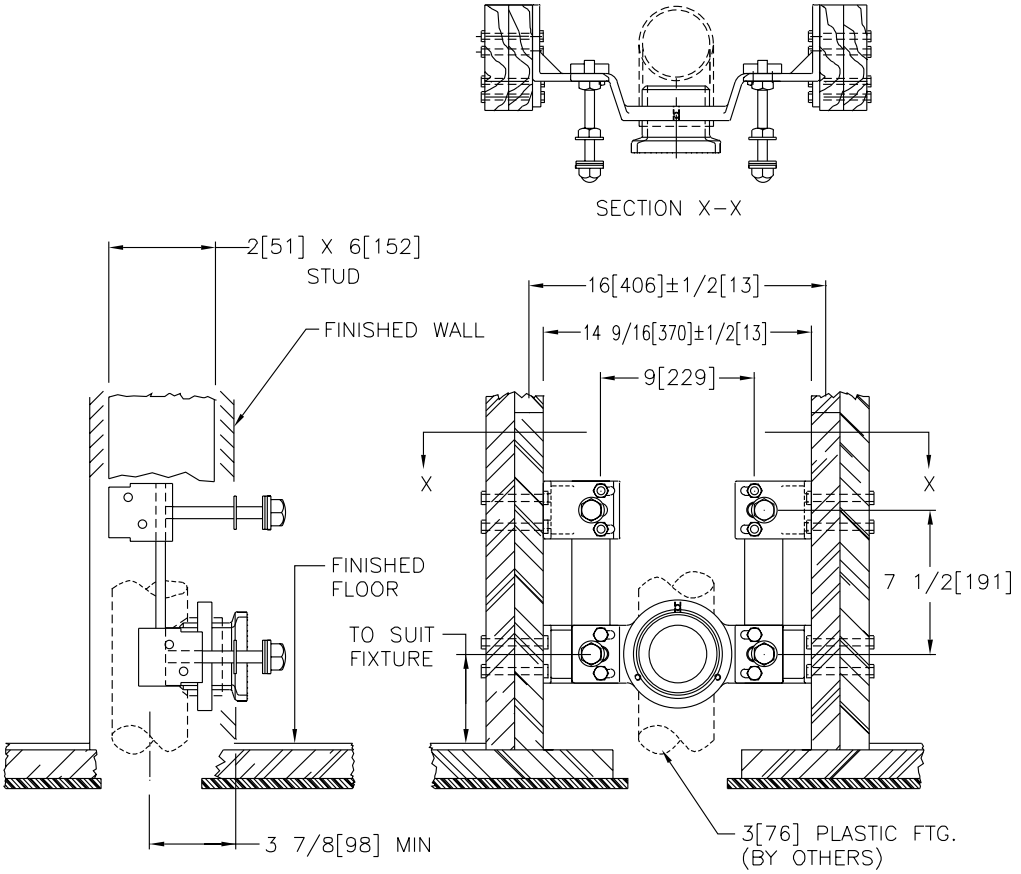

*Regularly furnished unless otherwise specified.

For additional product information, please visit www.zurn.ca

This symbol denotes a product that is engineered to reduce installation and rework time.

For Additional System Tools See "Z1200 Carrier Tools and Accessories" on page 228

HYDRANTS

HYDRANTS - APPLICATION INDEX	286
Z1300 ECOLOTROL WALL HYDRANT – ENCASED, NON-FREEZE, ANTI-SIPHON, AUTOMATIC DRAINING	287
Z1305 WALL HYDRANT – ENCASED, NON-FREEZE	287
Z1310 ECOLOTROL WALL HYDRANT – EXPOSED, NON-FREEZE, ANTI-SIPHON, AUTOMATIC DRAINING	288
Z1315 WALL HYDRANT – EXPOSED, NON-FREEZE	288
Z1320XL ECOLOTROL CERAMIC DISC WALL HYDRANT – ENCASED, NON-FREEZE, ANTI-SIPHON, AUTOMATIC DRAINING	289
⏲ **Z1320XL-EZ** ECOLOTROL CERAMIC DISC WALL HYDRANT – ENCASED, NON-FREEZE, ANTI-SIPHON, AUTOMATIC DRAINING	289
Z1321XL ECOLOTROL CERAMIC DISC WALL HYDRANT – EXPOSED, NON-FREEZE, ANTI-SIPHON, AUTOMATIC DRAINING	290
⏲ **Z1322XL-EZ** ECOLOTROL CERAMIC DISC WALL HYDRANT – EXPOSED, NON-FREEZE, ANTI-SIPHON, AUTOMATIC DRAINING	290
Z1325 WALL HYDRANT – ENCASED, VARI-TEMP, NON-FREEZE	291
⏲ **Z1327-EZ** NARROW WALL HOT/COLD HYDRANT WITH MOUNTING BRACKETS – ENCASED, MODERATE CLIMATE	291
Z1330XL ECOLOTROL CERAMIC DISC WALL HYDRANT – ENCASED, ANTI-SIPHON, AUTOMATIC DRAINING, MODERATE CLIMATE	292
⏲ **Z1332XL-EZ** ECOLOTROL CERAMIC DISC WALL HYDRANT – ENCASED, ANTI-SIPHON, AUTOMATIC DRAINING, MODERATE CLIMATE	292
Z1333XL ECOLOTROL CERAMIC DISC WALL HYDRANT – EXPOSED, ANTI-SIPHON, AUTOMATIC DRAINING, MODERATE CLIMATE	293
Z1335 WALL HYDRANT – ENCASED, MODERATE CLIMATE	293
Z1350 NARROW WALL HYDRANT – ENCASED, MODERATE CLIMATE	294
⏲ **Z1350-EZ** NARROW WALL HYDRANT WITH MOUNTING BRACKETS – ENCASED, MODERATE CLIMATE	294
Z1360XL GROUND HYDRANT – ENCASED, FLUSH TYPE, NON-FREEZE	295
Z1365 GROUND HYDRANT – ENCASED, FLUSH TYPE, NON-FREEZE	296
Z1370 GROUND HYDRANT – ENCASED, HOSE STORAGE, NON-FREEZE	297
Z1375 GROUND HYDRANT – ENCASED, MODERATE CLIMATE, INTERIOR USE	297
Z1385 POST HYDRANT – EXPOSED HEAD, NON-FREEZE	298
Z1388XL ROOF HYDRANT – EXPOSED HEAD, NON-FREEZE	298
Z1390 POST HYDRANT – EXPOSED HEAD, NON-FREEZE	299
Z1395XL YARD HYDRANT – EXPOSED HEAD, NON-FREEZE	300
Z1397XL FLO-TROL YARD HYDRANT – EXPOSED HEAD, NON-FREEZE	300

HYDRANTS - APPLICATION INDEX

WALL HYDRANTS	NON-FREEZE/SELF-DRAINING	MODERATE CLIMATE
Retail Outlets	Z1300, Z1305, Z1310, Z1320	Z1330, Z1335
Office Buildings	Z1300, Z1305, Z1320	Z1330, Z1335
Institutions, Hospitals, Schools	Z1300, Z1305, Z1320	Z1330, Z1335
Apartments	Z1315, Z1321	Z1333, Z1350, Z1350-EZ
Cored Wall Construction	Z1322-EZ	Z1332-EZ
Cleaning Areas, Slop Sink, Garbage Can Wash	Z1325	
Commercial/Multi-Family, Thin Wall Construction		Z1350, Z1350-EZ
Masonry Wall Construction	Z1320-EZ	
Vari-Temp (Hot/Cold)	Z1325	Z1327-EZ

GROUND HYDRANTS	NON-FREEZE/SELF-DRAINING	MODERATE CLIMATE
Parks, Recreational Areas	Z1360, Z1365, Z1370, Z1390, Z1395, Z1397	
Garden Areas	Z1360, Z1370, Z1385, Z1395, Z1397	Z1375
Industrial	Z1365, Z1370, Z1390	
Supermarkets, Malls	Z1360-HD	Z1375-HD
Farms, Agricultural	Z1385, Z1390, Z1395, Z1397	
Stables	Z1385, Z1390, Z1395, Z1397	

Note: Any of the non-freeze/self-draining hydrants may be used in moderate climates.

XL LEAD FREE

†Zurn "XL" Lead-Free compliant products are a line of durable plumbing products designed and manufactured to comply with state laws and local codes that mandate maximum allowable lead content levels. Zurn "XL" products are manufactured in accordance to the Federal SWDA section 1417.

†Lead-free product. For more information, see page 286.
**Regularly furnished unless otherwise specified.*

This symbol denotes a product that is engineered to reduce installation and rework time.
For additional product information, please visit www.zurn.ca

Z1300 ECOLOTROL WALL HYDRANT – ENCASED, NON-FREEZE, ANTI-SIPHON, AUTOMATIC DRAINING

ENGINEERING SPECIFICATION

Zurn Z1300 encased Ecolotrol anti-siphon automatic draining wall hydrant is designed for flush installation. Comes complete with non-freeze type integral backflow preventer, bronze casing, all bronze interior parts, non-turning operating rod with free-floating compression closure valve, replaceable bronze seat and seat washer, and combination 3/4" [19 mm] female or 1" [25 mm] male straight IP inlet. Nickel bronze box and hinged cover include operating key lock and "WATER" cast on cover.

Wall Thickness inches [mm]	Approximate Weight lb [kg]
6 [152], 8 [203]	9 [4]
10 [254], 12 [305], 14 [356]	12 [5]
16 [406], 18 [457]	15 [7]
20 [508], 22 [559], 24 [610]	18 [8]

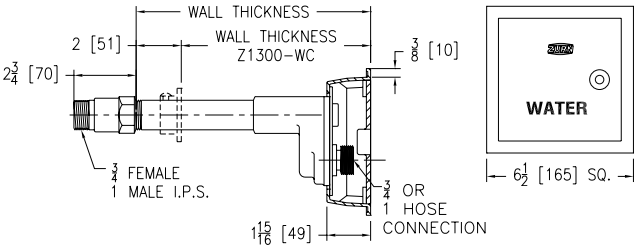

PRODUCT	DESCRIPTION	WALL THICKNESS	LIST PRICE
Z1300*	3/4" Hose Connection Nickel Bronze Box and Cover with Polished Face and Bronze Casing	6", 8"	2,068.00
		10", 12", 14"	2,122.00
		16", 18"	2,122.00
		20", 22", 24"	2,183.00
	1" Hose Connection Nickel Bronze Box and Cover with Polished Face and Bronze Casing	6" , 8"	2,240.00
		10", 12", 14"	2,298.00
		16", 18"	2,298.00
		20", 22", 24"	2,353.00

SUFFIXES		ADD
–CL	Cylinder Lock	156.00
–PB	Polished Bronze Face	N/C
–RA4	24" Replacement Rod Assembly Kit	398.00
–RK	Hydrant Parts Repair Kit	352.00
–SS	Stainless Steel Box and Cover	N/C
–WC	Wall Clamp	N/C
–34FS	3/4" Solder Female Inlet Adapter	N/C
–34UN	3/4" IP 90° Inlet Elbow with Union Nut	50.00

Z1305 WALL HYDRANT – ENCASED, NON-FREEZE

ENGINEERING SPECIFICATION

Zurn Z1305 encased, non-freeze, flush wall hydrant features bronze casing, all bronze interior parts, non-turning operating rod with free-floating compression closure valve, replaceable bronze seat and seat washer, and combination 3/4" [19 mm] female or 1" [25 mm] male straight IP inlet. Nickel bronze box and hinged cover include operating key lock and "WATER" cast on cover.

Wall Thickness inches [mm]	Approximate Weight lb [kg]
6 [152], 8 [203]	11 [5]
10 [254], 12 [305], 14 [356]	13 [6]
16 [406]	15 [7]
24 [610]	17 [8]

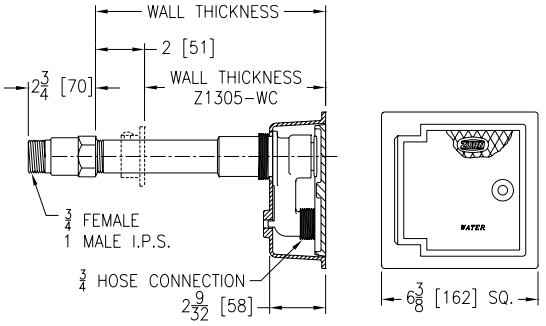

PRODUCT	DESCRIPTION	WALL THICKNESS	LIST PRICE
Z1305*	3/4" Hose Connection Nickel Bronze Box and Cover with Polished Face and Bronze Casing	6", 8"	1,801.00
		10", 12", 14"	1,856.00
		16"	1,856.00
		24"	1,916.00

SUFFIXES		ADD
–PB	Polished Bronze Face	N/C
–RA4	24" Replacement Rod Assembly Kit	398.00
–RK	Hydrant Parts Repair Kit	352.00
–WC	Wall Clamp	N/C
–34UN	3/4" IP 90° Inlet Elbow with Union Nut	50.00

This symbol denotes a product that is engineered to reduce installation and rework time.
For additional product information, please visit www.zurn.ca

†Lead-free product. For more information, see page 286.
**Regularly furnished unless otherwise specified.*

Z1310 ECOLOTROL WALL HYDRANT – EXPOSED, NON-FREEZE, ANTI-SIPHON, AUTOMATIC DRAINING

ENGINEERING SPECIFICATION

Zurn Z1310 exposed Ecolotrol anti-siphon automatic draining wall hydrant features non-freeze integral backflow preventer, bronze casing, all bronze interior parts, non-turning operating rod with free-floating compression closure valve, replaceable bronze seat and seat washer, and combination 3/4" [19 mm] female or 1" [25 mm] male straight IP inlet. Includes stainless steel face with operating key.

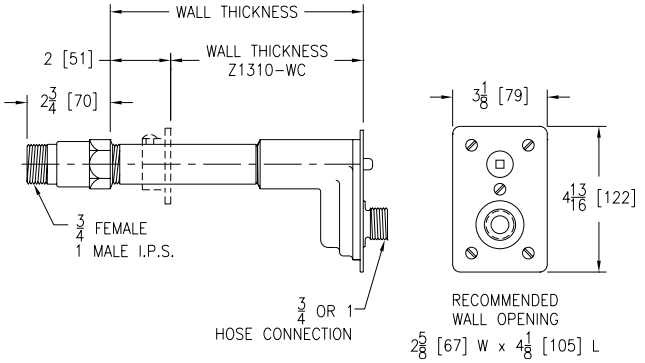

Wall Thickness inches [mm]	Approximate Weight lb [kg]
4 [102], 6 [152], 8 [203]	5 [2]
10 [254], 12 [305], 14 [356]	8 [4]
16 [406], 18 [457]	11 [5]
20 [508], 22 [559], 24 [610]	14 [6]

PRODUCT	DESCRIPTION	WALL THICKNESS	LIST PRICE
Z1310*	3/4" Hose Connection Bronze Hydrant with Polished Stainless Steel Face and Bronze Casing	4", 6", 8"	1,490.00
		10", 12", 14"	1,545.00
		16", 18"	1,609.00
		20", 22", 24"	1,756.00
	1" Hose Connection Bronze Hydrant with Polished Stainless Steel Face and Bronze Casing	4", 6", 8"	1,666.00
		10", 12", 14"	1,705.00
		16", 18"	1,782.00
		20", 22", 24"	1,929.00

SUFFIXES		ADD
–PB	Polished Bronze Face	N/C
–RA4	24" Replacement Rod Assembly Kit	398.00
–RK	Hydrant Parts Repair Kit	352.00
–WC	Wall Clamp	N/C
–34FS	3/4" Solder Female Inlet Adapter	N/C
–34UN	3/4" IP 90° Inlet Elbow with Union Nut	50.00

Z1315 WALL HYDRANT – EXPOSED, NON-FREEZE

ENGINEERING SPECIFICATION

Zurn Z1315 exposed, non-freeze wall hydrant features bronze casing, all bronze interior parts, non-turning operating rod with free-floating compression closure valve, replaceable bronze seat and seat washer, and combination 3/4" [19 mm] female or 1" [25 mm] male straight IP inlet. Comes complete with operating key.

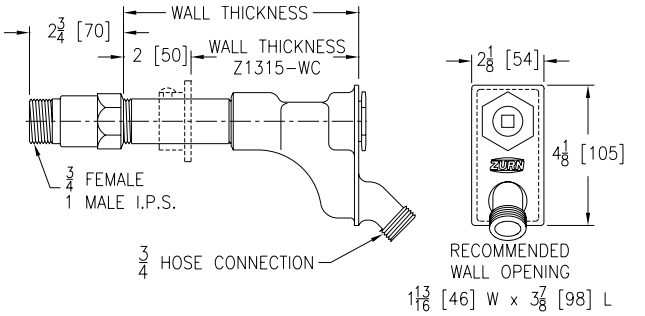

Wall Thickness inches [mm]	Approximate Weight lb [kg]
4 [102], 6 [152], 8 [203]	6 [3]
10 [254], 12 [305]	8 [4]
16 [406], 18 [457]	10 [5]

PRODUCT	DESCRIPTION	WALL THICKNESS	LIST PRICE
Z1315*	3/4" Hose Connection Nickel Bronze Box and Cover with Polished Face and Bronze Casing	4", 6", 8"	1,355.00
		10", 12"	1,413.00
		16", 18"	1,474.00

SUFFIXES		ADD
–PB	Polished Bronze Face	N/C
–RA4	24" Replacement Rod Assembly Kit	398.00
–RK	Hydrant Parts Repair Kit	352.00
–VB	3/4" Adapter Vacuum Breaker	116.00
–WC	Wall Clamp	N/C

†Lead-free product. For more information, see page 286.
*Regularly furnished unless otherwise specified.

This symbol denotes a product that is engineered to reduce installation and rework time.
For additional product information, please visit www.zurn.ca

Z1320XL ECOLOTROL CERAMIC DISC WALL HYDRANT – ENCASED, NON-FREEZE, ANTI-SIPHON, AUTOMATIC DRAINING

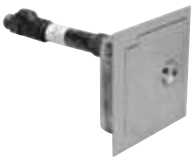

XL LEAD FREE

ENGINEERING SPECIFICATION

Zurn Z1320XL encased, Ecolotrol, lead-free†, non-freeze automatic draining wall hydrant is designed for flush installation. Features integral backflow preventer, anti-siphon technology, copper casing, all bronze interior components with 1/2 turn long-life ceramic disc cartridge, combination 3/4″ [19 mm] female solder and 3/4″ [19 mm] male pipe thread inlet connection, and 3/4″ [19 mm] male hose connection. Comes complete with Type 304 stainless steel housing and hinged cover that includes operating key lock and "WATER" cast on cover.

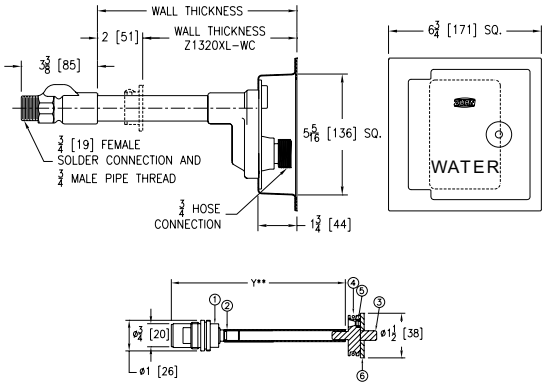

Wall Thickness inches [mm]	Approximate Weight lb [kg]
6 [152], 8 [203]	5 [2]
10 [254], 12 [305], 14 [356]	6 [3]
16 [406], 18 [457]	7 [3]
20 [508], 22 [559], 24 [610]	8 [4]
26 [660], 30 [762]	10 [5]

PRODUCT	DESCRIPTION	WALL THICKNESS	LIST PRICE
Z1320XL*	3/4″ Hose Connection Stainless Steel Box and Face with Copper Casing	6″, 8″	1,677.00
		10″, 12″, 14″	1,744.00
		16″, 18″	1,848.00
		20″, 22″, 24″	1,950.00
		26″, 30″	2,416.00
SUFFIXES			**ADD**
–CL	Cylinder Lock		156.00
–NB	Polished Nickel Bronze Face		N/C
–PB	Polished Bronze Face		59.00
–RK	Hydrant Parts Repair Kit (HYD-RK-Z1321XL/33XL)		352.00
–RT12	Ceramic Cartridge Removal Tool (Up to 12″)		137.00
–RT24	Ceramic Cartridge Removal Tool (Up to 24″)		137.00
–RT36	Ceramic Cartridge Removal Tool (Up to 36″)		137.00
–WC	Wall Clamp		N/C
–34EL	3/4″ 90° Solder Inlet Elbow		N/C
–34FIP	3/4″ IP Straight Female Inlet Adapter		50.00

Z1320XL-EZ ECOLOTROL CERAMIC DISC WALL HYDRANT – ENCASED, NON-FREEZE, ANTI-SIPHON, AUTOMATIC DRAINING

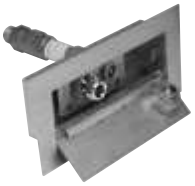

XL LEAD FREE

ENGINEERING SPECIFICATION

Zurn Z1320XL-EZ encased, Ecolotrol, lead-free†, non-freeze automatic draining wall hydrant is designed for flush installation. Features integral backflow preventer, anti-siphon technology, copper casing, all bronze interior components with 1/2 turn long-life ceramic disc cartridge, combination 3/4″ [19 mm] female solder and 3/4″ [19 mm] male pipe thread inlet connection, and 3/4″ [19 mm] male hose connection. Comes complete with Type 304 stainless steel housing and hinged cover that includes operating key lock and "WATER" cast on cover. Hydrant housing fits within one standard modular masonry course. Recommended wall opening: 3-3/16″ X 8-1/2″ [81 mm x 216 mm].

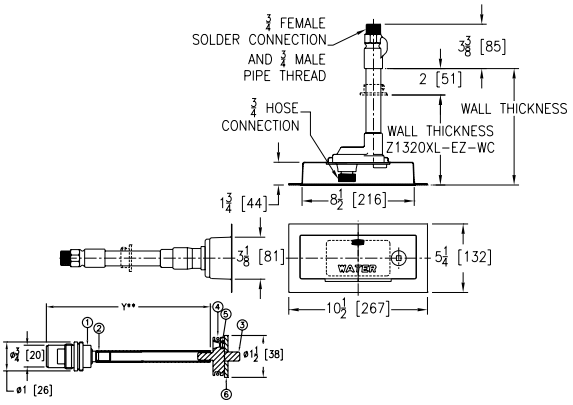

Wall Thickness inches [mm]	Approximate Weight lb [kg]
6 [152], 8 [203]	5 [2]
10 [254], 12 [305], 14 [356]	6 [3]
16 [406], 18 [457]	7 [3]
20 [508], 22 [559], 24 [610]	8 [4]
26 [660], 30 [762]	10 [5]

PRODUCT	DESCRIPTION	WALL THICKNESS	LIST PRICE
Z1320XL-EZ*	3/4″ Hose Connection Stainless Steel Box and Face with Copper Casing	6″, 8″	1,668.00
		10″, 12″, 14″	1,823.00
		16″, 18″	1,975.00
		20″, 22″, 24″	1,975.00
		26″, 30″	2,126.00
SUFFIXES			**ADD**
–CL	Cylinder Lock		156.00
–RK	Hydrant Parts Repair Kit (HYD-RK-Z1321XL/33XL)		352.00
–RT12	Ceramic Cartridge Removal Tool (Up to 12″)		137.00
–RT24	Ceramic Cartridge Removal Tool (Up to 24″)		137.00
–RT36	Ceramic Cartridge Removal Tool (Up to 36″)		137.00
–WC	Wall Clamp		N/C
–34EL	3/4″ IP 90° Solder Inlet Elbow		N/C
–34FIP	3/4″ IP Straight Female Inlet Adapter		50.00

This symbol denotes a product that is engineered to reduce installation and rework time.
For additional product information, please visit www.zurn.ca

†Lead-free product. For more information, see page 286.
**Regularly furnished unless otherwise specified.*

Z1321XL ECOLOTROL CERAMIC DISC WALL HYDRANT – EXPOSED, NON-FREEZE, ANTI-SIPHON, AUTOMATIC DRAINING

XL LEAD FREE

ENGINEERING SPECIFICATION

Zurn Z1321XL exposed, Ecolotrol, lead-free†, non-freeze automatic draining wall hydrant is designed for flush installation. Features integral backflow preventer, anti-siphon technology, copper casing, all bronze interior components with 1/2 turn long-life ceramic disc cartridge, combination 3/4″ [19 mm] female solder and 3/4″ [19 mm] male pipe thread inlet connection, and 3/4″ [19 mm] male hose connection. Furnished with Type 304 stainless steel faceplate and includes operating key.

Wall Thickness inches [mm]	Approximate Weight lb [kg]
6 [152], 8 [203]	3 [1]
10 [254], 12 [305], 14 [356]	4 [2]
16 [406], 18 [457]	5 [2]
20 [508], 22 [559], 24 [610]	6 [3]
26 [660], 30 [762]	8 [4]

PRODUCT	DESCRIPTION	WALL THICKNESS	LIST PRICE
Z1321XL*	3/4″ Hose Connection Stainless Steel Box and Face with Copper Casing	6″, 8″	1,050.00
		10″, 12″, 14″	1,116.00
		16″, 18″	1,221.00
		20″, 22″, 24″	1,315.00
		26″, 30″	1,782.00

SUFFIXES		ADD
–PB	Polished Bronze Face	59.00
–RK	Hydrant Parts Repair Kit (HYD-RK-Z1321XL/33XL)	352.00
–RT12	Ceramic Cartridge Removal Tool (Up to 12″Wall)	137.00
–RT24	Ceramic Cartridge Removal Tool (Up to 24″ Wall)	137.00
–RT36	Ceramic Cartridge Removal Tool (Up to 36″ Wall)	137.00
–WC	Wall Clamp	N/C
–34EL	3/4″ IP 90° Solder Inlet Elbow	N/C
–34FIP	3/4″ IP StraightFemale Inlet Adapter	50.00

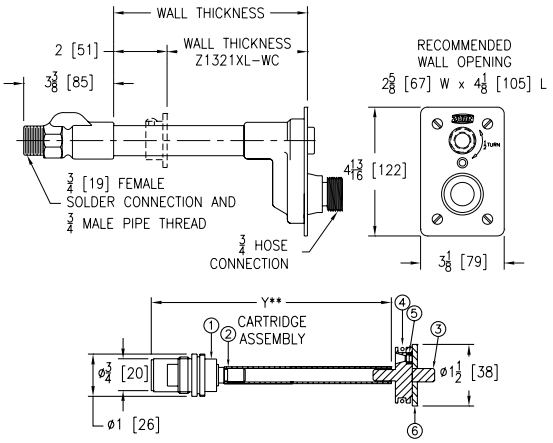

Z1322XL-EZ ECOLOTROL CERAMIC DISC WALL HYDRANT – EXPOSED, NON-FREEZE, ANTI-SIPHON, AUTOMATIC DRAINING

XL LEAD FREE

PATENTED

ENGINEERING SPECIFICATION

Zurn Z1322XL-EZ encased, Ecolotrol, lead-free†, non-freeze automatic draining wall hydrant is designed for flush installation in 6″ [152 mm] diameter cored hole concrete exterior wall. Features integral backflow preventer, anti-siphon technology, copper casing, all bronze interior components with 1/2 turn long-life ceramic disc cartridge, combination 3/4″ [19 mm] female solder and 3/4″ [19 mm] male pipe thread inlet connection, and 3/4″ [19 mm] male hose connection. Includes Type 304 stainless steel housing with large flange and hinged cover that includes operating key lock and "WATER" cast on cover.

Wall Thickness inches [mm]	Approximate Weight lb [kg]
6 [152], 8 [203]	5 [2]
10 [254], 12 [305], 14 [356]	6 [3]
16 [406], 18 [457]	7 [3]
20 [508], 22 [559], 24 [610]	8 [4]
26 [660], 30 [762]	10 [5]

PRODUCT	DESCRIPTION	WALL THICKNESS	LIST PRICE
Z1322XL-EZ*	3/4″ Hose Connection Stainless Steel Box and Face with Copper Casing	6″, 8″	1,412.00
		10″, 12″, 14″	1,476.00
		16″, 18″	1,583.00
		20″, 22″, 24″	1,679.00
		26″, 30″	2,145.00

SUFFIXES		ADD
–CL	Cylinder Lock	156.00
–RK	Hydrant Parts Repair Kit (HYD-RK-Z1321XL/33XL)	352.00
–RT12	Ceramic Cartridge Removal Tool (Up to 12″ Wall)	137.00
–RT24	Ceramic Cartridge Removal Tool (Up to 24″ Wall)	137.00
–RT36	Ceramic Cartridge Removal Tool (Up to 36″ Wall)	137.00
–8	8″ Diameter Cored Hole	N/C
–34EL	3/4″ IP 90° Solder Inlet Elbow	N/C
–34FIP	3/4″ IP Straight Female Inlet Adapter	50.00

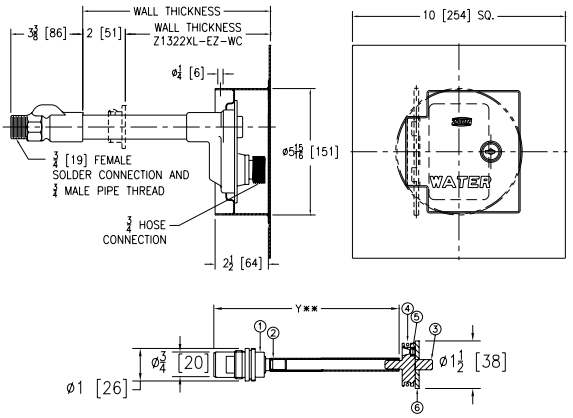

†Lead-free product. For more information, see page 286.
*Regularly furnished unless otherwise specified.

This symbol denotes a product that is engineered to reduce installation and rework time.
For additional product information, please visit www.zurn.ca

Z1325 WALL HYDRANT – ENCASED, VARI-TEMP, NON-FREEZE

ENGINEERING SPECIFICATION

Zurn Z1325 Vari-Temp combination hot and cold water, non-freeze, encased wall hydrant is designed for flush installation. Comes complete with bronze casing, all bronze interior components, non-turning operating rods with free-floating compression closure valves, replaceable bronze seat and seat washer, and combination 3/4" [19 mm] female or 1" [25 mm] male straight IP inlet. Includes nickel bronze box and hinged cover with operating key lock and "WATER" cast on cover.

NOTES

When -VB vacuum breaker suffix is specified, the vacuum breaker must be manually tripped at the end of usage to facilitate drainage of the hydrant and maintain the non-freeze feature.

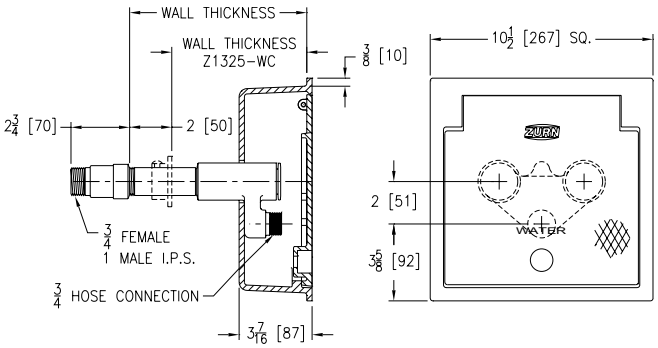

Wall Thickness inches [mm]	Approximate Weight lb [kg]
6 [152], 8 [203]	27 [12]
10 [254], 12 [305], 14 [356]	31 [14]
16 [406], 18 [457]	35 [16]
24 [610]	39 [18]

PRODUCT	DESCRIPTION	WALL THICKNESS	LIST PRICE
Z1325*	3/4" Hose Connection Nickel Bronze Box and Cover with Polished Face and Bronze Casing	6", 8"	4,185.00
		10", 12", 14"	4,264.00
		16", 18"	4,316.00
		24"	4,435.00

SUFFIXES		ADD
–CL	Cylinder Lock	156.00
–NW	Narrow Wall (Priced same as 6–8" Wall)	N/C
–PB	Polished Bronze Face	N/C
–RA4	24" Replacement Rod Assembly Kit	398.00
–RK	Hydrant Parts Repair Kit	352.00
–VB	3/4" Adapter Vacuum Breaker	116.00
–WC	Wall Clamp	N/C
–34UN	3/4" IP 90° Inlet Elbow with Union Nut	50.00

Z1327-EZ NARROW WALL HOT/COLD HYDRANT WITH MOUNTING BRACKETS – ENCASED, MODERATE CLIMATE

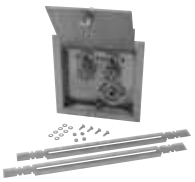

PATENTED

ENGINEERING SPECIFICATION

Zurn Z1327-EZ encased, moderate climate hot/cold wall hydrant is designed for narrow wall installation. Features bronze body, all brass interior parts, replaceable seat washers, screwdriver operated stop valves in supply, handle operated control valves, 3/4" [19 mm] IP female inlets, and 3/4" [19 mm] male hose connection standard. Includes stainless steel box and removable hinged cover with cylinder lock and "WATER" cast on cover. Comes complete with mounting brackets, hardware for installation and horizontal adjustment inside a 16" [406 mm] on center stud wall.

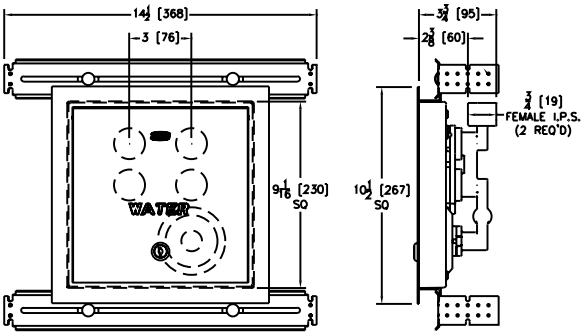

Wall Thickness inches [mm]	Approximate Weight lb [kg]
3-1/2 [89]	11 [5]

PRODUCT	DESCRIPTION	WALL THICKNESS	LIST PRICE
Z1327-EZ*	3/4" Hose Connection Stainless Steel Face with Bronze Body	3-1/2"	3,500.00

SUFFIXES		ADD
–RK	Hydrant Parts Repair Kit	352.00
–VB	3/4" Adapter Vacuum Breaker	116.00
–24	Mounting Brackets (for 24" on Center Stud Wall)	N/C

This symbol denotes a product that is engineered to reduce installation and rework time.
For additional product information, please visit www.zurn.ca

†Lead-free product. For more information, see page 286.
**Regularly furnished unless otherwise specified.*

Z1330XL ECOLOTROL CERAMIC DISC WALL HYDRANT – ENCASED, ANTI-SIPHON, AUTOMATIC DRAINING, MODERATE CLIMATE

XL LEAD FREE

ENGINEERING SPECIFICATION

Zurn Z1330XL encased, Ecolotrol, lead-free†, anti-siphon, moderate climate, interior wall hydrant is designed for flush installation. Features integral backflow preventer, anti-siphon technology, all bronze interior components with 1/2 turn long-life ceramic disc cartridge, combination 3/4″ [19 mm] female solder and 3/4″ [19 mm] male pipe thread inlet connection, and 3/4″ [19 mm] male hose connection. Includes Type 304 stainless steel, flanged housing with locking, hinged cover stamped "WATER", and operating key.

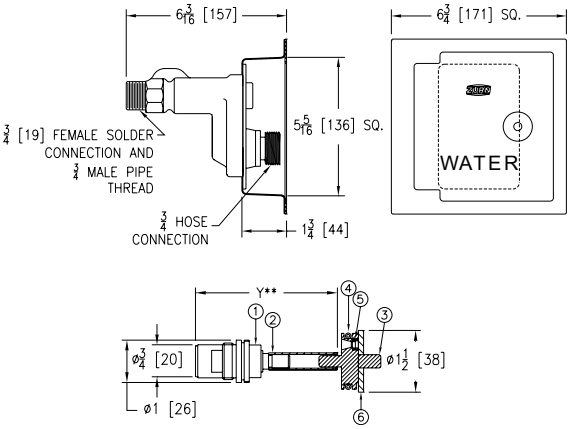

Wall Thickness inches [mm]	Approximate Weight lb [kg]
8 [203]	4 [2]

PRODUCT	DESCRIPTION	WALL THICKNESS	LIST PRICE
Z1330XL*	3/4″ Hose Connection Stainless Steel Box and Cover with Polished Face	8″	1,789.00
SUFFIXES			**ADD**
–CL	Cylinder Lock		156.00
–NB	Polished Nickel Bronze Face		N/C
–PB	Polished Bronze Face		59.00
–RK	Hydrant Parts Repair Kit (HYD-RK-Z1321XL/33XL)		352.00
–RT12	Ceramic Cartridge Removal Tool (Up to 12″ Wall)		137.00
–34EL	3/4″ 90° Solder Inlet Elbow		50.00

Z1332XL-EZ ECOLOTROL CERAMIC DISC WALL HYDRANT – ENCASED, ANTI-SIPHON, AUTOMATIC DRAINING, MODERATE CLIMATE

XL LEAD FREE

PATENTED

ENGINEERING SPECIFICATION

Zurn Z1322XL-EZ encased, Ecolotrol, lead-free†, non-freeze automatic draining wall hydrant is designed for flush installation in 6″ [152 mm] diameter cored hole concrete exterior wall. Features integral backflow preventer, anti-siphon technology, copper casing, all bronze interior components with 1/2 turn long-life ceramic disc cartridge, combination 3/4″ [19 mm] female solder and 3/4″ [19 mm] male pipe thread inlet connection, and 3/4″ [19 mm] male hose connection. Includes Type 304 stainless steel housing with large flange and hinged cover that includes operating key lock and "WATER" cast on cover.

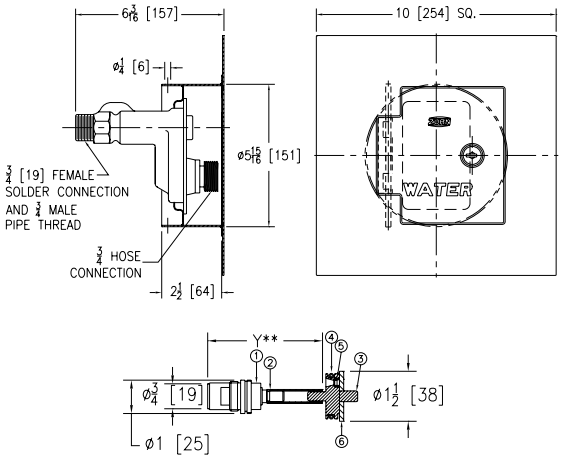

Wall Thickness inches [mm]	Approximate Weight lb [kg]
8 [203]	4 [2]

PRODUCT	DESCRIPTION	WALL THICKNESS	LIST PRICE
Z1332XL-EZ*	3/4″ Hose Connection Stainless Steel Box and Cover with Polished Face	8″	1,789.00
SUFFIXES			**ADD**
–CL	Cylinder Lock		156.00
–RK	Hydrant Parts Repair Kit (HYD-RK-Z1321XL/33XL)		352.00
–RT12	Ceramic Cartridge Removal Tool (Up to 12″ Wall)		137.00
–8	8″ Diameter Cored Hole		N/C

†Lead-free product. For more information, see page 286.
**Regularly furnished unless otherwise specified.*

This symbol denotes a product that is engineered to reduce installation and rework time.
For additional product information, please visit www.zurn.ca

Z1333XL ECOLOTROL CERAMIC DISC WALL HYDRANT – EXPOSED, ANTI-SIPHON, AUTOMATIC DRAINING, MODERATE CLIMATE

XL LEAD FREE

ENGINEERING SPECIFICATION

Zurn Z1333XL exposed, Ecolotrol, lead-free†, anti-siphon, moderate climate, interior wall hydrant is designed for flush installation. Features integral backflow preventer, anti-siphon technology, all bronze interior components with 1/2 turn long-life ceramic disc cartridge, combination 3/4" [19 mm] female solder and 3/4" [19 mm] male pipe thread inlet connection, and 3/4" [19 mm] male hose connection. Includes Type 304 stainless steel faceplate and operating key.

Wall Thickness inches [mm]	Approximate Weight lb [kg]
6 [152]	3 [1]

PRODUCT	DESCRIPTION	WALL THICKNESS	LIST PRICE
Z1333XL*	3/4" Hose Connection Stainless Steel Face	6"	**1,169.00**
SUFFIXES			**ADD**
–PB	Polished Bronze Face		**59.00**
–RK	Hydrant Parts Repair Kit (HYD-RK-Z1321XL/33XL)		**352.00**
–RT12	Ceramic Cartridge Removal Tool (Up to 12" Wall)		**137.00**

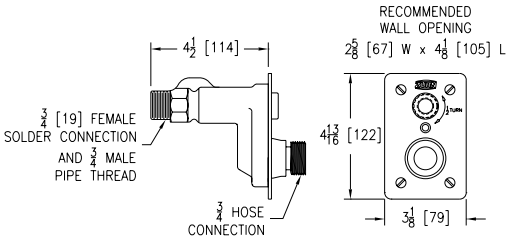

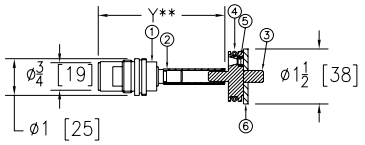

Z1335 WALL HYDRANT – ENCASED, MODERATE CLIMATE

ENGINEERING SPECIFICATION

Zurn Z1335 encased flush wall hydrant is designed for moderate climate and interior wall installation. Comes complete with all bronze interior parts, non-turning operating coupling, free-floating compression closure valve, replaceable bronze seat and seat washer, and 3/4" [19 mm] female IP inlet. Includes nickel bronze box and hinged cover with operating key lock and "WATER" cast on cover.

Wall Thickness inches [mm]	Approximate Weight lb [kg]
6 [152]	8 [4]

PRODUCT	DESCRIPTION	WALL THICKNESS	LIST PRICE
Z1335*	3/4" Hose Connection Nickel Bronze Box and Cover with Polished Face	6"	**1,315.00**
SUFFIXES			**ADD**
–CI	D.C.C.I. Box and Cover		**N/C**
–CL	Cylinder Lock		**156.00**
–PB	Polished Bronze Face		**N/C**
–RK	Hydrant Parts Repair Kit		**352.00**
–34FS	3/4" Solder Female Inlet Adapter		**N/C**
–34UN	3/4" IP 90° Inlet Elbow with Union Nut		**50.00**

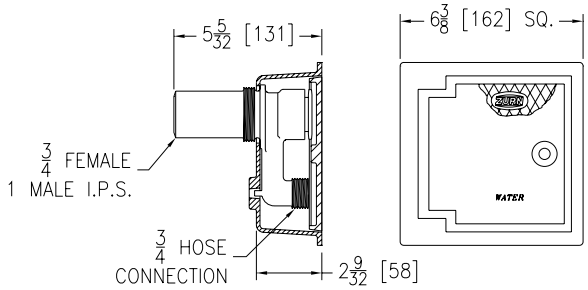

This symbol denotes a product that is engineered to reduce installation and rework time.
For additional product information, please visit www.zurn.ca

†Lead-free product. For more information, see page 286.
**Regularly furnished unless otherwise specified.*

Z1350 NARROW WALL HYDRANT – ENCASED, MODERATE CLIMATE

PATENTED

ENGINEERING SPECIFICATION

Zurn Z1350 encased moderate climate wall hydrant is designed for narrow wall installation. Comes complete with bronze body, all bronze interior parts, replaceable seat washer, screwdriver operated stop valve in supply, key operated control valve, and 3/4" [19 mm] IP female inlet connection and 3/4" [19 mm] male hose connection standard. Includes adjustable stainless steel box furnished with hinged cover, cylinder lock, and "WATER" stamped on cover.

NOTES

The adjustable sleeve on the stainless steel box is provided with a gasket as standard, but additional caulking of all inside joints is required (by others) after the hydrant box has been properly set. Caulking should be performed on all open seams, including the seams where the gasket is present.

Wall Thickness inches [mm]	Approximate Weight lb [kg]
4 [102]	4 [2]

PRODUCT	DESCRIPTION	WALL THICKNESS	LIST PRICE
Z1350*	3/4" Hose Connection Stainless Steel Box and Cover with Bronze Body	4"	1,207.00
SUFFIXES			**ADD**
–RK	Hydrant Parts Repair Kit		559.00
–VB	3/4" Adapter Vacuum Breaker		116.00
–34EL	3/4" IP 90° Inlet Elbow Adapter		N/C
–34FS	3/4" Solder Female Inlet Adapter		N/C

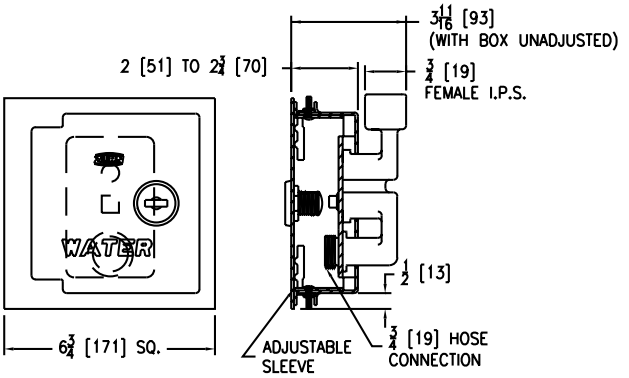

Z1350-EZ NARROW WALL HYDRANT WITH MOUNTING BRACKETS – ENCASED, MODERATE CLIMATE

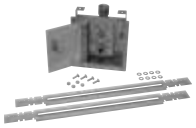

ENGINEERING SPECIFICATION

Zurn Z1350-EZ encased moderate climate wall hydrant is designed for narrow wall installation. Features bronze body, all bronze interior parts, replaceable seat washer, screwdriver operated stop valve in supply, key operated control valve, and 3/4" [19 mm] IP female inlet and 3/4" [19 mm] male hose connection standard. Includes stainless steel box and hinged cover with cylinder lock and "WATER" stamped on cover. Comes complete with mounting brackets and hardware for installation and horizontal adjustment inside a 16" [406 mm] on center stud wall.

NOTES

The adjustable sleeve on the stainless steel box is provided with a gasket as standard, but additional caulking of all inside joints is required (by others) after the hydrant box has been properly set. Caulking should be performed on all open seams, including the seams where the gasket is present.

Wall Thickness inches [mm]	Approximate Weight lb [kg]
4 [102]	6 [3]

PRODUCT	DESCRIPTION	WALL THICKNESS	LIST PRICE
Z1350-EZ*	3/4" Hose Connection Stainless Steel Box and Cover with Bronze Body	4"	1,379.00
SUFFIXES			**ADD**
–RK	Hydrant Parts Repair Kit		559.00
–VB	3/4" Adapter Vacuum Breaker		116.00
–24	Mounting Brackets (For 24" on Center Stud Wall)		N/C
–34EL	3/4" IP 90° Inlet Elbow Adapter		50.00
–34FS	3/4" Solder Female Inlet Adapter		N/C

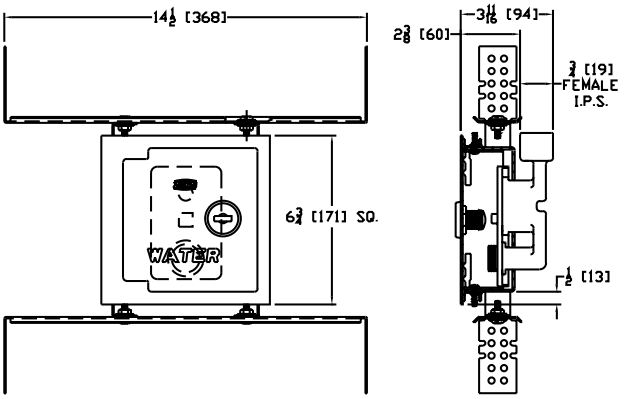

†Lead-free product. For more information, see page 286.
*Regularly furnished unless otherwise specified.

This symbol denotes a product that is engineered to reduce installation and rework time.
For additional product information, please visit www.zurn.ca

Z1360XL GROUND HYDRANT – ENCASED, FLUSH TYPE, NON-FREEZE

XL LEAD FREE

ENGINEERING SPECIFICATION

Zurn Z1360-XL encased, lead-free†, non-freeze ground hydrant is designed for flush with grade or finished (non-traffic) floor installation. Features galvanized steel casing, bronze and stainless steel interior components, bronze seat and replaceable seat washer, non-turning operating rod, and free-floating compression closure valve with 3/4" [19 mm] or 1" [25 mm] inlet connection with 1/4" [6 mm] tapped drainage port on housing, and 3/4" [19 mm] or 1" [25 mm] male hose connection. Includes plain bronze box and locking, hinged, scoriated cover stamped "WATER" and operating key.

NOTES

‡Non-Freeze feature will not automatically function when (-VB suffix) vacuum breaker is specified. The vacuum breaker must be manually tripped to facilitate drainage of hydrant.

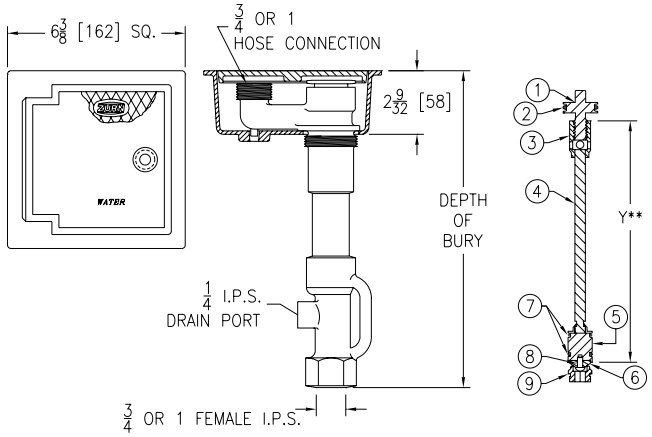

Depth of Bury feet [m]	Approximate Weight lb [kg]
2 [0.61]	17 [8]
3 [0.91]	21 [10]
4 [1.22]	25 [11]
5 [1.52]	33 [15]
6 [1.83]	39 [18]
7 [2.13]	43 [20]
8 [2.44]	47 [21]
9 [2.74]	52 [24]
10 [3.05]	56 [25]

PRODUCT	DESCRIPTION	DEPTH OF BURY FEET	LIST PRICE
Z1360XL*	3/4" Hose Connection Bronze Box and Scoriated Cover with Galvanized Steel Casing	2′	2,172.00
		3′	2,228.00
		4′	2,287.00
		5′	2,345.00
		6′	2,414.00
		7′	2,544.00
		8′	2,697.00
		9′	2,862.00
		10′	3,035.00
	1" Hose Connection Bronze Box and Scoriated Cover with Galvanized Steel Casing	2′	2,577.00
		3′	2,577.00
		4′	2,695.00
		5′	2,754.00
		6′	2,812.00
		7′	2,975.00
		8′	3,154.00
		9′	3,340.00
		10′	3,542.00

SUFFIXES		ADD
–CI	D.C.C.I. Box and Cover	N/C
–DP12	1/2" IP Drain Port in Box	175.00
–DP14	1/4" IP Drain Port in Box	175.00
–DP38	3/8" IP Drain Port in Box	175.00
–HD-8	Heavy–Duty Ductile Iron Cover with Cast Iron Box	399.00
–HD-10	Heavy-Duty Stainless Steel Cover with Nickel Box	846.00
–K	Flashing Flange Only	779.00
–KC	Flashing Flange with Clamp Collar	847.00
–NB	Polished Nickel Bronze Face	282.00
–PB	Polished Bronze Face	59.00
–RK	Hydrant Parts Repair Kit (HYD-RK-Z1360XL)	357.00
–VB	3/4" Adapter Vacuum Breaker‡ (Requires deeper box to accommodate vacuum breaker)	116.00

This symbol denotes a product that is engineered to reduce installation and rework time.
For additional product information, please visit www.zurn.ca

†Lead-free product. For more information, see page 286.
**Regularly furnished unless otherwise specified.*

Z1365 GROUND HYDRANT – ENCASED, FLUSH TYPE, NON-FREEZE

ENGINEERING SPECIFICATION

Zurn Z1365 encased, non-freeze ground hydrant is designed for flush with grade or finished floor installation. Features galvanized steel casing, all bronze interior parts, bronze seat and replaceable seat washer, and non-turning operating rod with free-floating compression closure valve with 1-1/4" [32 mm], 1-1/2" [38 mm], or 2" [51 mm] connection. Includes Dura-Coated cast iron box and hinged scoriated cover with operating "T" handle key lock and "WATER" cast on cover. Hydrant is equipped with a tapped 1/4" [6 mm] NPT drain port in valve housing.

NOTES

Important: Hydrant must be opened one turn minimum to seal drain port during use.

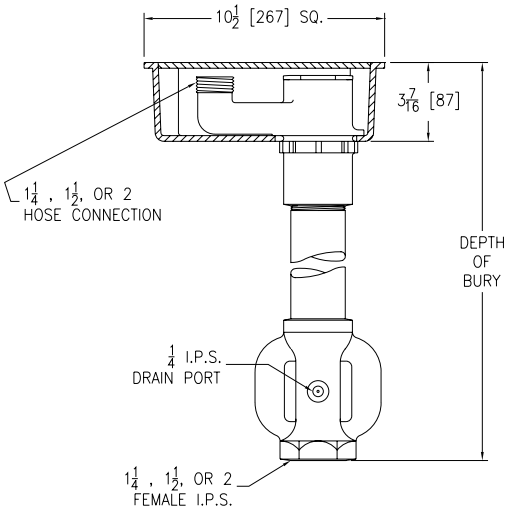

Depth of Bury feet [m]	Approximate Weight lb [kg]
2 [0.61]	42 [19]
3 [0.91]	46 [21]
4 [1.22]	50 [23]
5 [1.52]	54 [24]
6 [1.83]	58 [26]

PRODUCT	DESCRIPTION	DEPTH OF BURY FEET	LIST PRICE
Z1365*	1-1/4" Inlet/Hose Connection D.C.C.I. Box and Scoriated Cover with Galvanized Steel Casing	2′	10,379.00
		3′	10,491.00
	1-1/2" Inlet/Hose Connection D.C.C.I. Box and Scoriated Cover with Galvanized Steel Casing	2′	10,744.00
		3′	10,854.00
		4′	10,962.00
		5′	11,069.00
		6′	11,186.00
	2" Inlet/Hose Connection D.C.C.I. Box and Scoriated Cover with Galvanized Steel Casing	2′	11,924.00
		3′	12,274.00
		4′	12,393.00
		5′	12,725.00
		6′	13,085.00

SUFFIXES		ADD
–DP14	1/4" IP Drain Port in Box	175.00
–NB	Polished Nickel Bronze Face	615.00
–PB	Polished Bronze Face	352.00
–RK	Hydrant Parts Repair Kit	1,285.00

†Lead-free product. For more information, see page 286.
*Regularly furnished unless otherwise specified.

This symbol denotes a product that is engineered to reduce installation and rework time.
For additional product information, please visit www.zurn.ca

Z1370 GROUND HYDRANT – ENCASED, HOSE STORAGE, NON-FREEZE

ENGINEERING SPECIFICATION

Zurn Z1370 encased, non-freeze ground hydrant is designed for flush with grade or finished floor installation. Features galvanized steel casing, all bronze interior components bronze seat and replaceable seat washer, and non-turning operating rod with free-floating compression closure valve. Dura-Coated cast iron box provides hose storage and comes complete with hinged, scoriated cover with operating key lock. Hydrant is equipped with a tapped 1/4" [6 mm] NPT drain port in valve housing. (Hose should always be disconnected for storage.)

NOTES

Important: Hydrant must be opened one turn minimum to seal drain port during use.

Depth of Bury feet [m]	Approximate Weight lb [kg]
2 [0.61]	81 [37]
3 [0.91]	85 [39]
4 [1.22]	89 [40]
6 [1.83]	97 [44]

PRODUCT	DESCRIPTION	DEPTH OF BURY FEET	LIST PRICE
Z1370*	3/4" Hose Connection D.C.C.I. Box and Scoriated Cover with Galvanized Steel Casing	2'	3,685.00
		3'	3,685.00
		4'	3,805.00
		6'	3,922.00
SUFFIXES			**ADD**
–BC	Bronze Casing		409.00
–DP12	1/2" IP Drain Port in Box		175.00
–NB	Polished Nickel Bronze Face (Add 3/16" to 8-1/2" Dim. and 3/4" to 12-1/2" Dim.)		3,168.00
–RK	Hydrant Parts Repair Kit		352.00

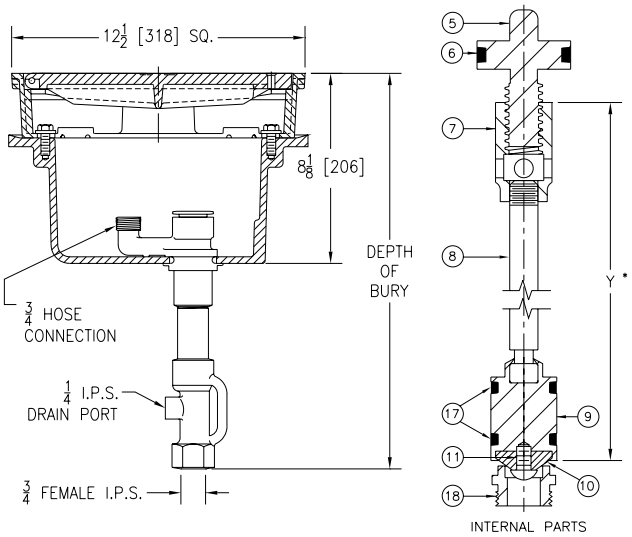

Z1375 GROUND HYDRANT – ENCASED, MODERATE CLIMATE, INTERIOR USE

ENGINEERING SPECIFICATION

Zurn Z1375 encased, moderate climate ground hydrant is designed for flush with grade or finished floor installation. Comes complete with all bronze interior parts, replaceable bronze seat and seat washer, and non-turning operating coupling with free-floating compression closure valve. Includes Dura-Coated cast iron box and hinged, scoriated cover with "WATER" cast on cover.

Approximate Weight lb [kg]
8 [4]

PRODUCT	DESCRIPTION	APP. WT. LBS.	LIST PRICE
Z1375*	3/4" Hose Connection D.C.C.I. Box and Scoriated Cover with Bronze Hydrant	8	2,010.00
SUFFIXES			**ADD**
–DP14	1/4" Drain Port in Box		175.00
–HD-8	Heavy–Duty Ductile Iron Cover with Cast Iron Box		471.00
–HD-10	Heavy Duty Stainless Steel Cover with Nickel Box		985.00
–NB	Polished Nickel Bronze Face		432.00
–PB	Polished Bronze Face		184.00
–RK	Hydrant Parts Repair Kit		352.00
–VB	3/4" Adapter Vacuum Breaker (Requires deeper box to accommodate vacuum breaker)		116.00

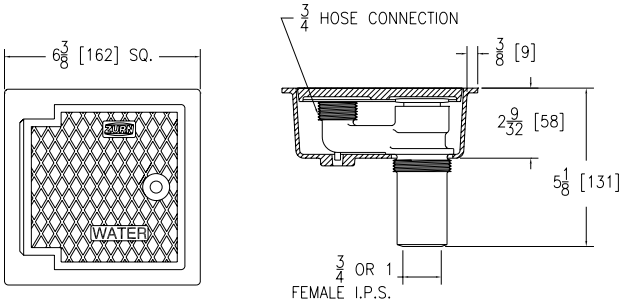

This symbol denotes a product that is engineered to reduce installation and rework time.
For additional product information, please visit www.zurn.ca

†Lead-free product. For more information, see page 286.
**Regularly furnished unless otherwise specified.*

Z1385 POST HYDRANT – EXPOSED HEAD, NON-FREEZE

ENGINEERING SPECIFICATION

Zurn Z1385 exposed, non-freeze post hydrant features galvanized steel casing and cast aluminum casing guard, all bronze interior parts, bronze seat and replaceable seat washer, and non-turning operating rod with free-floating compression closure valve with 3/4″ [19 mm] or 1″ [25 mm] connection. Includes operating key. Hydrant is equipped with a tapped 1/4″ [6 mm] NPT drain port in valve housing.

NOTES

1. 'B' dimension based on outlet connection 30″ [762 mm] above ground.
2. Important: Hydrant must be opened one turn minimum to seal drain port during use.
3. ‡Non-Freeze feature will not automatically function when (-VB suffix) vacuum breaker is specified. The vacuum breaker must be manually tripped to facilitate drainage of hydrant.

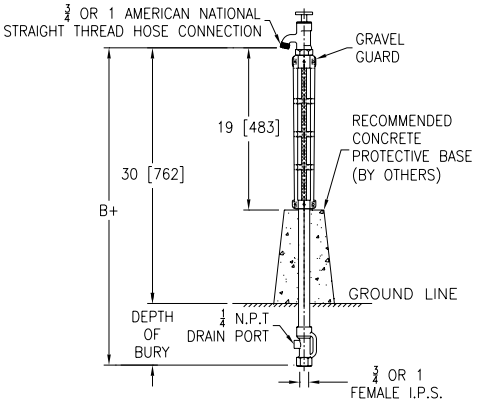

Depth of Bury feet [m]	B+ feet [m]	Approximate Weight lb [kg]
2 [0.61]	4-1/2 [1.37]	25 [11]
3 [0.91]	5-1/2 [1.68]	29 [13]
4 [1.22]	6-1/2 [1.98]	33 [15]
5 [1.52]	7-1/2 [2.29]	37 [17]
6 [1.83]	8-1/2 [2.59]	41 [19]
7 [2.13]	9-1/2 [2.90]	45 [20]
8 [2.44]	10-1/2 [3.20]	49 [22]

PRODUCT	DESCRIPTION	DEPTH OF BURY FEET	LIST PRICE
Z1385*	3/4″ Inlet/Hose Connection Bronze Exposed Head with Galvanized Steel Casing and Aluminum Casing Guard	2′	1,986.00
		3′	2,048.00
		4′	2,103.00
		5′	2,163.00
		6′	2,222.00
		7′	2,378.00
		8′	2,522.00
	1″ Inlet/Hose Connection Bronze Exposed Head with Galvanized Steel Casing and Aluminum Casing Guard	2′	2,397.00
		3′	2,459.00
		4′	2,510.00
		5′	2,572.00
		6′	2,626.00
		7′	2,779.00
		8′	2,947.00
SUFFIXES			**ADD**
–RK	Hydrant Parts Repair Kit		352.00
–VB	3/4″ Adapter Vacuum Breaker‡		116.00
–WH	Wheel Handle		225.00

Z1388XL ROOF HYDRANT – EXPOSED HEAD, NON-FREEZE

XL LEAD FREE

ENGINEERING SPECIFICATION

Zurn Z1388XL exposed, lead-free†, non-freeze roof hydrant features a Dura-Coated cast iron head and lift handle with lock option, galvanized steel casing, bronze and stainless steel interior components, 3/4″ [19 mm] inlet connection with 1/8″ [3 mm] tapped drain port on housing, and 3/4″ [19 mm] male hose connection. Comes complete with Dura-Coated cast iron roof support sleeve, wide anchoring flange, and clamp collar.

NOTES

‡Non-Freeze feature will not automatically function when vacuum breaker (-VB suffix) is specified. The vacuum breaker must be manually tripped to facilitate drainage of hydrant.

Approximate Weight lb [kg]
27 [12]

PRODUCT	DESCRIPTION	APP. WT. LBS.	LIST PRICE
Z1388XL*	3/4″ Inlet/Hose Connection	27	3,414.00
SUFFIXES			**ADD**
–AC	Aluminum Casing Guard		258.00
–RK	Hydrant Parts Repair Kit (HYD-RK-Z1395XL)		263.00
–VB	3/4″ Adapter Vacuum Breaker‡		116.00

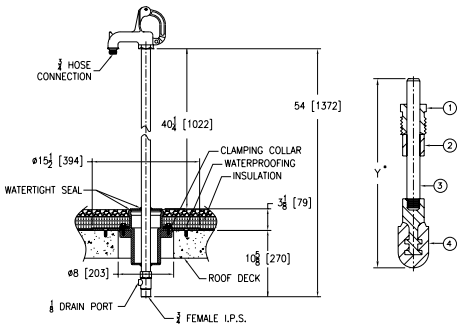

†Lead-free product. For more information, see page 286.
*Regularly furnished unless otherwise specified.

This symbol denotes a product that is engineered to reduce installation and rework time.
For additional product information, please visit www.zurn.ca

Z1390 POST HYDRANT – EXPOSED HEAD, NON-FREEZE

ENGINEERING SPECIFICATION

Zurn Z1390 exposed, non-freeze post hydrant features galvanized steel casing and cast aluminum casing guard, all bronze interior parts, bronze seat and replaceable seat washer, and non-turning operating rod with free-floating compression closure valve with 1-1/4″ [32 mm], 1-1/2″ [38 mm], or 2″ [51 mm] connection. Includes T-handle operating key. Hydrant is equipped with a tapped 1/4″ [6 mm] NPT drain port in valve housing.

NOTES

1. 'B' dimension based on outlet connection 30″ [762 mm] above ground.
2. Important: Hydrant must be opened one turn minimum to seal drain port during use.

Depth of Bury feet [m]	B+ feet [m]	Approximate Weight lb [kg]
3 [0.91]	5-1/2 [1.68]	62 [28]
4 [1.22]	6-1/2 [1.98]	67 [30]
5 [1.52]	7-1/2 [2.29]	72 [33]
6 [1.83]	8-1/2 [2.59]	77 [35]
8 [2.44]	10-1/2 [3.20]	87 [39]

PRODUCT	DESCRIPTION	DEPTH OF BURY FEET	LIST PRICE
Z1390*	1-1/4″ Hose Connection Bronze Exposed Head with Galvanized Steel Casing and Aluminum Casing Guard	3′	8,646.00
		4′	8,750.00
		5′	8,858.00
		6′	8,970.00
		8′	9,891.00
	1-1/2″ Hose Connection Bronze Exposed Head with Galvanized Steel Casing and Aluminum Casing Guard	3′	9,005.00
		4′	9,113.00
		5′	9,223.00
		6′	9,293.00
		8′	10,292.00
	2″ Hose Connection Bronze Exposed Head with Galvanized Steel Casing and Aluminum Casing Guard	3′	10,773.00
		4′	10,933.00
		5′	11,052.00
		6′	11,253.00
		8′	11,883.00

SUFFIXES		ADD
–RK	Hydrant Parts Repair Kit	1,671.00
–WH	Wheel Handle	225.00

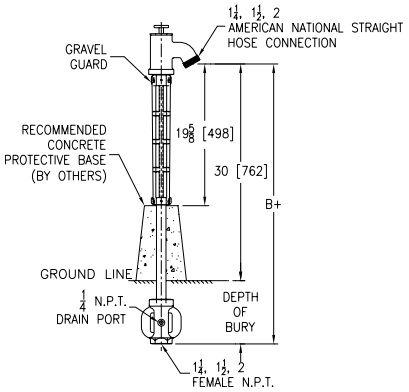

This symbol denotes a product that is engineered to reduce installation and rework time.
For additional product information, please visit www.zurn.ca

†Lead-free product. For more information, see page 286.
**Regularly furnished unless otherwise specified.*

Z1395XL YARD HYDRANT – EXPOSED HEAD, NON-FREEZE

XL LEAD FREE

ENGINEERING SPECIFICATION

Zurn Z1395XL exposed, lead-free†, non-freeze yard hydrant features a Dura-Coated cast iron head and lift handle with lock option, galvanized steel casing, bronze and stainless steel interior components, 3/4" [19 mm] inlet connection with 1/8" [3 mm] tapped drainage port on housing, and 3/4" [19 mm] male hose connection.

NOTES

1. B' dimension based on outlet connection 30" [762 mm] above ground.
2. ‡Non-Freeze feature will not automatically function when vacuum breaker (-VB suffix) is specified. The vacuum breaker must be manually tripped to facilitate drainage of hydrant.

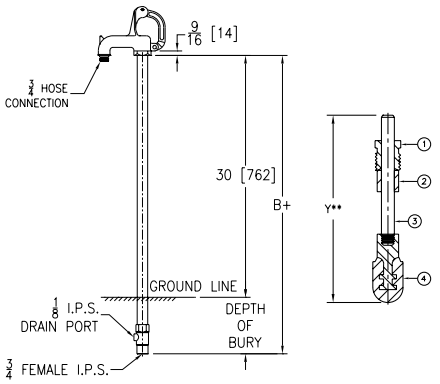

Depth of Bury feet [m]	B+ feet [m]	Approximate Weight lb [kg]
2 [0.61]	4-1/2 [1.37]	15 [7]
3 [0.91]	5-1/2 [1.68]	19 [9]
4 [1.22]	6-1/2 [1.98]	23 [10]
5 [1.52]	7-1/2 [2.29]	27 [12]
6 [1.83]	8-1/2 [2.59]	31 [14]
8 [2.44]	10-1/2 [3.20]	39 [18]

PRODUCT	DESCRIPTION	DEPTH OF BURY FEET	LIST PRICE
Z1395XL*	3/4" Hose Connection D.C.C.I. Head with Galvanized Steel Casing	2'	946.00
		3'	1,151.00
		4'	1,183.00
		5'	1,282.00
		6'	1,493.00
		8'	1,701.00
SUFFIXES			**ADD**
–AC	Aluminum Casing Guard		225.00
–RK	Hydrant Parts Repair Kit		326.00
–VB	3/4" Adapter Vacuum Breaker‡		116.00

Z1397XL FLO-TROL YARD HYDRANT – EXPOSED HEAD, NON-FREEZE

XL LEAD FREE

ENGINEERING SPECIFICATION

Zurn Z1397XL exposed, lead-free†, non-freeze yard hydrant features a Dura-Coated cast iron head and lift handle with lock option, slotted links for adjustable locking flow control, galvanized steel casing, bronze and stainless steel interior components, 3/4" [19 mm] inlet connection with 1/8" [3 mm] tapped drainage port on housing, and 3/4" [19 mm] male hose connection.

NOTES

‡Non-Freeze feature will not automatically function when vacuum breaker (-VB suffix) is specified. The vacuum breaker must be manually tripped to facilitate drainage of hydrant.

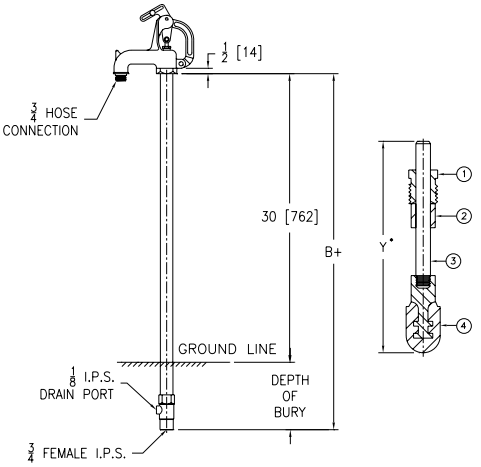

Depth of Bury feet [m]	B+ feet [m]	Approximate Weight lb [kg]
2 [0.61]	4-1/2 [1.37]	15 [7]
3 [0.91]	5-1/2 [1.68]	19 [9]
4 [1.22]	6-1/2 [1.98]	23 [10]
5 [1.52]	7-1/2 [2.29]	27 [12]
6 [1.83]	8-1/2 [2.59]	31 [14]
8 [2.44]	10-1/2 [3.20]	39 [18]

PRODUCT	DESCRIPTION	DEPTH OF BURY FEET	LIST PRICE
Z1397XL*	3/4" Hose Connection D.C.C.I. Head with Galvanized Steel Casing	2'	847.00
		3'	1,151.00
		4'	1,183.00
		5'	1,282.00
		6'	1,493.00
		8'	1,701.00
SUFFIXES			**ADD**
–AC	Aluminum Casing Guard		225.00
–RK	Hydrant Parts Repair Kit		326.00
–VB	3/4" Adapter Vacuum Breaker‡		116.00

†Lead-free product. For more information, see page 286.
**Regularly furnished unless otherwise specified.*

This symbol denotes a product that is engineered to reduce installation and rework time.
For additional product information, please visit www.zurn.ca

CLEANOUTS

CLEANOUTS – APPLICATION INDEX	302
⏲ **Z1400-BZ1** FLOOR CLEANOUT WITH "TYPE B" COVER AND EZ1™ TECHNOLOGY	303
⏲ **Z1400-SZ1** BODY ASSEMBLY W/ "TYPE S" COVER AND EZ1™ TECHNOLOGY	304
Z1400 EXTRA HEAVY-DUTY "LEVEL-TROL" ADJUSTABLE FLOOR CLEANOUT	305
Z1400-K HEAVY-DUTY "LEVEL-TROL" ADJUSTABLE FLOOR CLEANOUT WITH ANCHOR FLANGE	306
Z1402 HEAVY-DUTY NON-ADJUSTABLE FLOOR CLEANOUT	307
Z1404 HEAVY-DUTY FLOOR ACCESS HOUSING	308
Z1406 HEAVY-DUTY ADJUSTABLE SPIGOT CLEANOUT	308
Z1440 CLEANOUT FERRULE WITH PLUG	309
Z1445 CLEANOUT TEE	309
Z1449 CLEANOUT FERRULE WITH PLUG	310
Z1454 ADJUSTABLE FLOOR CLEANOUT WITH FLASHING FLANGE	310
Z1456 DECK CLEANOUT	311
Z1457 FLOOR ACCESS COVER	311
Z1460 SQUARE WALL ACCESS PANEL	312
Z1461 SQUARE HINGED ACCESS PANEL	312
Z1462 SECURED WALL ACCESS PANEL	313
Z1463 ROUND SCORIATED ACCESS COVER	313
Z1464 WATER SUPPLY CONTROL BOX ASSEMBLY	314
Z1468 ACCESS COVER AND PLUG	314
Z1469 ROUND ACCESS COVER	315
Z1470 BRONZE CLEANOUT PLUG	315
Z1471 AIR INLET	316
Z1474 HEAVY-DUTY CLEANOUT HOUSING	316
Z1602 ADJUSTABLE ROUND MEDIUM-DUTY NICKEL BRONZE CLEANOUT	317
Z1612 ADJUSTABLE ROUND HEAVY-DUTY NICKEL BRONZE CLEANOUT	317
Z1615 CAST IRON LINE OR FLOOR CLEANOUT - NON-ADJUSTABLE	318
Z1616 CAST IRON LINE OR FLOOR CLEANOUT - NON-ADJUSTABLE	318
Z1666 SEAL OR TEST PLUG	319
Z1666-1 URINAL CLEANOUT	319

CLEANOUTS – APPLICATION INDEX

Product selection should be made with a specific application and the type of construction in mind. The varied types and sizes of Zurn cleanouts, along with their options, offer a selection for all applications.

APPLICATION	TYPE	RECOMMENDED CLEANOUT
Finished Floor Areas	"Level-Trol" Adjustable	Z1400, Z1400-K, ZN1400, ZN1454
	Non-Adjustable	ZN1402
	Linoleum, Tile or Composition Floors (Adjustable)	ZN1400-K, ZN1400-TX (Square), ZN1400-X (Round)
	Linoleum, Tile or Composition Floors (Adjustable) with EZ1™ Technology (Post Pour Adjustment)	Z1400-BZ1, Z1400-SZ1, Z1400-SZ1-DP
	Linoleum, Tile or Composition Floors (Non-Adjustable)	ZN1402-TX (Square), ZN1402-X (Round)
	Terrazzo Floors	Z1400-K, ZN1400-Z
Heavy Traffic and Industrial Areas	"Level-Trol" Adjustable	Z1400, ZN1400-HD (Round or Square), Z1400-K
	Non-Adjustable	ZN1402-HD, Z1474
Medium Traffic and Areaways	Adjustable (Finished Area)	Z1454, Z1404
Exposed Drainage Lines	Horizontal and Vertical Cleanouts	Z1440, Z1445
Access Covers and Boxes	Deck Areas	Z1456, Z1457, Z1463
	Square Covers	Z1460, Z1461, Z1462
	Round Covers	Z1463, Z1469
	Access Boxes	Z1464
Air Inlets	Finished Areas	Z1471
General Purpose	Cleanout	Z1440, Z1445, Z1449
	Cleanout Plug	Z1470

For additional product information, please visit www.zurn.ca

**Regularly furnished unless otherwise specified.*

This symbol denotes a product that is engineered to reduce installation and rework time.

Z1400-BZ1 FLOOR CLEANOUT WITH "TYPE B" COVER AND EZ1™ TECHNOLOGY

PATENT PENDING

ENGINEERING SPECIFICATION

Zurn Z1400-BZ1 cleanout features Dura-Coated cast iron body with bottom outlet, gas and water tight threaded ABS tapered plug, and top assembly. EZ1 drainage series is engineered to simplify product installation. Rough-in adapter provides up to 1-1/4" [32 mm] of vertical post pour adjustment, pre-packaged shims for tilt correction, and integrated, self-contained Type B light duty scoriated cover with rough-in cover for protection during concrete pour. Cleanout is designed in accordance with ASME A112.36.2M.

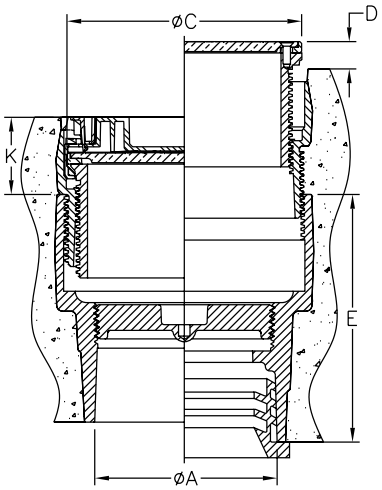

Cover Designation	Dimensions in inches						Approximate Weight lb [kg]
	A Pipe Size	C	D		K		
			Min.	Max.	Min.	Max.	
-5B	2 [51]	5-5/32 [131]	0	1 [25]	1-23/32 [44]	2-15/16 [75]	10 [5]
	3-4 [76-102]	5-5/32 [131]	0	1 [25]	1-23/32 [44]	2-15/16 [75]	12 [5]
-6B	2 [51]	6-8/32 [156]	0	31/32 [25]	1-11/16 [43]	2-27/32 [72]	11 [5]
	3-4 [76-102]	6-8/32 [156]	0	31/32 [25]	1-11/16 [43]	2-27/32 [72]	13 [6]
-8B	6 [152]	7-7/8 [200]	0	1 [25]	1-7/8 [48]	3-1/32 [77]	19 [9]

PREFIXES	DESCRIPTION	PIPE SIZE	LIST PRICE
ZN1400-BZ1*	D.C.C.I. with Polished Nickel Bronze Top	2"	612.00
		3"	612.00
		4"	612.00
		6"	961.00
ZB1400-BZ1	D.C.C.I. with Polished Bronze Top	2"	581.00
		3"	581.00
		4"	581.00
		6"	909.00
ZS1400-BZ1	D.C.C.I. with Polished Type 304 (CF8) Stainless Steel Top	2"	1,144.00
		3"	1,144.00
		4"	1,144.00
		6"	1,777.00

OUTLET (SPECIFY PIPE SIZE IN INCHES AND TYPE OF OUTLET)				
TYPE	DESCRIPTION	PIPE SIZE/OUTLET TYPE	E BODY HT. DIM.	ADD
NH	No-Hub	2NH, 3NH	4-3/4"	N/C
		4NH	5"	N/C
		6NH	5-1/2"	N/C
NL	Neo-Loc	2NL, 4NL	4-3/4"	N/C
		3NL	5-7/16"	N/C
		6NL	5-1/2"	N/C

SUFFIXES			ADD
–AR	Acid Resisting Epoxy Coated Finish		336.00
–BP	Bronze Plug	2", 3", 4"	164.00
–G	Galvanized Cast Iron		334.00
–TC	Neo-Loc Test Cap Gasket (2", 3", 4" NL Bottom Outlet Only)		26.00
–VP	Vandal-Proof Screws		101.00

*Regularly furnished unless otherwise specified.

This symbol denotes a product that is engineered to reduce installation and rework time.

For additional product information, please visit www.zurn.ca

Z1400-SZ1 BODY ASSEMBLY W/ "TYPE S" COVER AND EZ1™ TECHNOLOGY

PATENT PENDING

ENGINEERING SPECIFICATION

Zurn Z1400-SZ1 cleanout features Dura-Coated cast iron body, bottom outlet, gas and water tight threaded ABS tapered plug, and top assembly. EZ1 drainage series is engineered to simplify product installation. Concrete shield provides up to 1-1/4" [32 mm] of vertical post pour adjustment, pre-packaged shims for tilt correction, and integrated, self-contained Type S light duty scoriated cover with rough-in cover for protection during concrete pour. Cleanout is designed in accordance with ASME A112.36.2M.

Cover Designation	Dimensions in inches						Approximate Weight lb [kg]
	A Pipe Size	CxC	D		K		
			Min.	Max.	Min.	Max.	
-5S	2 [51]	5 X 5 [127 X 127]	0	1 [25]	1-15/16 [49]	3-1/8 [79]	12 [5]
	3-4 [76-102]	5 X 5 [127 X 127]	0	1 [25]	1-15/16 [49]	3-1/8 [79]	14 [6]
-6S	2 [51]	6 X 6 [152 X 152]	0	31/32 [25]	2 [51]	3-3/16 [81]	13 [6]
	3-4 [76-102]	6 X 6 [152 X 152]	0	31/32 [25]	2 [51]	3-3/16 [81]	15 [7]

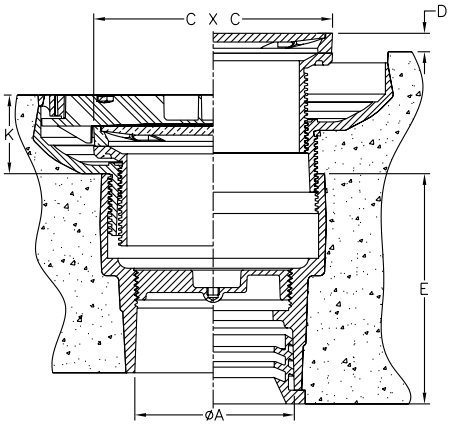

PREFIXES	DESCRIPTION	PIPE SIZE	LIST PRICE
ZN1400-SZ1*	D.C.C.I. with Polished Nickel Bronze Top	2"	612.00
		3"	612.00
		4"	612.00
ZB1400-SZ1	D.C.C.I. with Polished Bronze Top	2"	581.00
		3"	581.00
		4"	581.00
ZS1400-SZ1	D.C.C.I. with Polished Type 304 (CF8) Stainless Steel Top	2"	POA
		3"	POA
		4"	POA

OUTLET (SPECIFY PIPE SIZE IN INCHES AND TYPE OF OUTLET)				
TYPE	DESCRIPTION	PIPE SIZE/ OUTLET TYPE	E BODY HT. DIM.	ADD
NH	No-Hub	2NH, 3NH	4-3/4"	N/C
		4NH	5"	N/C
NL	Neo-Loc	2NL, 4NL	4-3/4"	N/C
		3NL	5-7/16"	N/C

SUFFIXES			ADD
–AR	Acid Resisting Epoxy Coated Finish		336.00
–BP	Bronze Plug	2", 3", 4"	164.00
–G	Galvanized Cast Iron		334.00
–TC	Neo-Loc Test Cap Gasket (2," 3", 4" NL Bottom Outlet Only)		26.00
–VP	Vandal-Proof Screws		101.00

For additional product information, please visit www.zurn.ca

**Regularly furnished unless otherwise specified.*

This symbol denotes a product that is engineered to reduce installation and rework time.

Z1400 EXTRA HEAVY-DUTY "LEVEL-TROL" ADJUSTABLE FLOOR CLEANOUT

ENGINEERING SPECIFICATION

Zurn Z1400 level-trol adjustable floor cleanout features Dura-Coated cast iron body, gas and watertight ABS tapered thread plug, and round scoriated cast iron extra heavy-duty secured top (specify finish Z, ZB, ZN, ZS) adjustable to finished floor.

A Pipe Size/ Outlet Type	Dimensions in inches [mm]		Approximate Weight lb [kg]
	C	E Body Height Dimensions	
Inside Caulk (IC)			
2IC	6-1/8 [156]	6-7/8 [175]	14 [6]
3IC	6-1/8 [156]		14 [6]
4IC	7-1/4 [184]		18 [8]
6IC	9-1/4 [235]		32 [15]
No-Hub (NH)			
2NH	4-1/8 [105]	4-5/8 [117]	7 [3]
3NH	4-1/8 [105]	4-3/4 [121]	8 [4]
4NH	5-1/8 [130]	4-3/4 [121]	10 [5]
6NH	8-1/4 [210]	4-3/4 [121]	22 [10]
8NH	9-1/4 [235]	7-1/2 [191]	30 [14]
Neo-Loc (NL)			
2NL	4-1/8 [105]	4-3/4 [121]	8 [4]
3NL	5-1/8 [130]	4-3/4 [121]	11 [5]
4NL	5-1/8 [130]	4-3/4 [121]	12 [5]
6NL	8-1/4 [210]	5-7/8 [149]	22 [10]
8NL	9-1/4 [235]	6-1/2 [165]	24 [11]

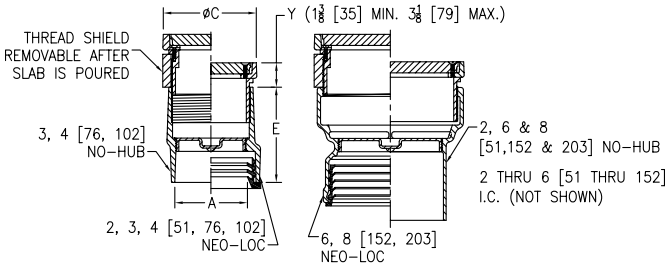

PREFIXES	DESCRIPTION	A PIPE SIZE	LIST PRICE
Z1400*	Dura-Coated Cast Iron	2″	437.00
		3″	437.00
		4″	437.00
		6″	717.00
		8″	953.00
ZB1400	D.C.C.I. with Polished Bronze Light-Duty Top (Deduct 1/2″ from 'Y' Dim.)	2″	581.00
		3″	581.00
		4″	581.00
		6″	909.00
		8″	1,143.00
ZN1400	D.C.C.I. with Polished Nickel Bronze Light-Duty Top (Deduct 1/2″ from 'Y' Dim.)	2″	612.00
		3″	612.00
		4″	612.00
		6″	961.00
		8″	1,151.00
ZS1400	D.C.C.I. with Polished Stainless Steel Heavy-Duty Top (Add 3/16″ to 'Y' Dim.)	2″	677.00
		3″	682.00
		4″	688.00
		6″	1,463.00
		8″	1,799.00

OUTLET (SPECIFY PIPE SIZE IN INCHES AND TYPE OF OUTLET)

TYPE	DESCRIPTION	PIPE SIZE/OUTLET TYPE	E BODY HT. DIM.	ADD
IC	Inside Caulk	2IC, 3IC, 4IC, 6IC	See Chart	N/C
NH	No-Hub	2NH, 3NH, 4NH, 6NH, 8NH	See Chart	N/C
NL	Neo-Loc	2NL, 3NL, 4NL, 6NL, 8NL	See Chart	N/C

SUFFIXES			ADD
–AR	Acid Resisting Epoxy Coated Finish		336.00
–BP	Bronze Plug	2″, 3″, 4″	164.00
		6″, 8″	516.00
–CF	Carpet Flange Cover (ZB and ZN only)		295.00
–CM	Carpet Marker		50.00
–DC	Duresist Cover (Z and HD Only)		318.00
–DX	Round ZB or ZN Top with Dex-O-Tex Flange (2″ thru 4″ sizes only)		495.00
–G	Galvanized Cast Iron		334.00
–HD	Extra Heavy-Duty Veneer Top - Add 1/8″ to 'Y' Dim. (ZB and ZN only)		108.00
–K	Anchor Flange		N/C
–KC	Anchor Flange with Clamping Collar		147.00
◷ –PC	Protective Cover		88.00
–SG	Solid Gasketed Cover		318.00
–SM	Special Marking Stamped on Top		225.00
–T	Square Top		160.00
◷ –TC	Neo-Loc Test Cap Gasket (2″, 3″, 4″ NL Bottom Outlet Only)		26.00
–TX	Square Top Recessed for 1/8″ Tile (ZB and ZN only)		160.00
–VP	Vandal-Proof Screws		101.00
–X	Round Top Recessed for 1/8″ Tile (ZB and ZN only)		N/C
–Z	Round Top Recessed for 1-1/4″ Terrazzo (ZB and ZN only)		160.00

*Regularly furnished unless otherwise specified.

◷ *This symbol denotes a product that is engineered to reduce installation and rework time.*

For additional product information, please visit www.zurn.ca

Z1400-K HEAVY-DUTY "LEVEL-TROL" ADJUSTABLE FLOOR CLEANOUT WITH ANCHOR FLANGE

ENGINEERING SPECIFICATION

Zurn Z1400-K level-trol adjustable floor cleanout features Dura-Coated cast iron body, anchor flange, gas and watertight ABS tapered thread plug, and round scoriated cast iron heavy-duty secured top (specify finish Z, ZB, ZN, ZS) adjustable to finished floor.

A Pipe Size/ Outlet Type	Dimensions in inches [mm]			Approximate Weight lb [kg]
	B	C	E Body Height Dimensions	
Inside Caulk (IC)				
2IC	9-1/2 [241]	6-1/8 [156]	6-7/8 [175]	18 [8]
3IC	9-1/2 [241]	6-1/8 [156]		19 [9]
4IC	11-1/2 [292]	7-1/4 [184]		20 [9]
6IC	12-1/4 [311]	9-1/4 [235]		39 [18]
No-Hub (NH)				
2NH	7-1/2 [191]	4-1/8 [105]	4-5/8 [117]	11 [5]
3NH	7-1/2 [191]	5-1/8 [130]	5-3/8 [137]	10 [5]
4NH	7-1/2 [191]	5-1/8 [130]	5-3/8 [137]	13 [6]
6NH	11-1/2 [292]	8-1/4 [210]	4-3/4 [121]	29 [13]
8NH	12-1/4 [311]	9-1/4 [235]	7-1/2 [191]	38 [17]
Neo-Loc (NL)				
2NL	7-1/2 [191]	5-1/8 [130]	5-3/8 [137]	12 [5]
3NL	7-1/2 [191]	5-1/8 [130]	5-3/8 [137]	13 [6]
4NL	7-1/2 [191]	5-1/8 [130]	5-3/8 [137]	14 [6]
6NL	11-1/2 [292]	8-1/4 [210]	5-7/8 [149]	29 [13]
8NL	12-1/4 [311]	9-1/4 [235]	6-1/2 [165]	32 [15]

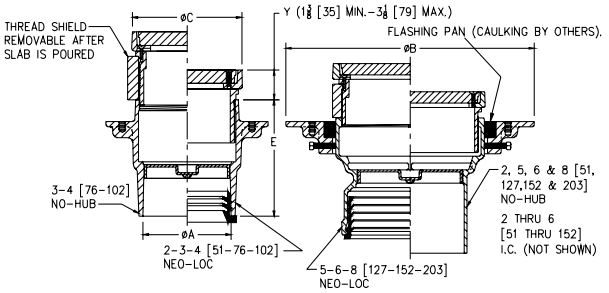

Shown with -SA Stabilizer Option

PREFIXES	DESCRIPTION	A PIPE SIZE	LIST PRICE
Z1400-K*	Dura-Coated Cast Iron	2″	**437.00**
		3″	**437.00**
		4″	**437.00**
		6″	**717.00**
		8″	**953.00**
ZB1400-K	D.C.C.I. with Polished Bronze Light-Duty Top (Deduct 1/2″ from 'Y' Dim.)	2″	**582.00**
		3″	**582.00**
		4″	**582.00**
		6″	**913.00**
		8″	**1,143.00**
ZN1400-K	D.C.C.I. with Polished Nickel Bronze Light-Duty Top (Deduct 1/2″ from 'Y' Dim.)	2″	**612.00**
		3″	**612.00**
		4″	**612.00**
		6″	**961.00**
		8″	**1,205.00**
ZS1400-K	D.C.C.I. with Polished Stainless Steel Heavy-Duty Top (Add 3/16″ to 'Y' Dim.)	2″	**POA**
		3″	**POA**
		4″	**POA**
		6″	**POA**
		8″	**POA**

OUTLET (SPECIFY PIPE SIZE IN INCHES AND TYPE OF OUTLET)

TYPE	DESCRIPTION	PIPE SIZE/OUTLET TYPE	E BODY HT. DIM.	ADD
IC	Inside Caulk	2IC, 3IC, 4IC, 6IC	See Chart	**N/C**
NH	No-Hub	2NH, 3NH, 4NH, 6NH, 8NH	See Chart	**N/C**
NL	Neo-Loc	2NL, 3NL, 4NL, 6NL, 8NL	See Chart	**N/C**

SUFFIXES			ADD
–AR	Acid Resisting Epoxy Coated Finish		**336.00**
–BP	Bronze Plug	2″, 3″, 4″	**164.00**
		6″, 8″	**516.00**
–C	Clamp Collar		**147.00**
–CF	Carpet Flange Cover (ZB and ZN only)		**295.00**
–CM	Carpet Marker		**50.00**
–DC	Duresist Cover		**318.00**
–DX	Round ZB or ZN Top with Dex-O-Tex Flange (2″ thru 4″ sizes only)		**495.00**
–G	Galvanized Cast Iron		**207.00**
–HD	Heavy-Duty Veneer Top - Add 1/8″ to 'Y' Dim. (ZB and ZN only)		**108.00**
⏲ **–SA**	Stabilizer Assembly (See Z1035)		**N/C**
–SG	Solid Gasketed Cover		**318.00**
–SM	Special Marking Stamped on Top		**225.00**
–T	Square Top		**160.00**
⏲ **–TC**	Neo-Loc Test Cap Gasket (2″-4″ NL Bottom Outlet Only)		**26.00**
–TX	Square Top Recessed for 1/8″ Tile (ZB and ZN only)		**160.00**
–VP	Vandal-Proof Screws		**101.00**
–X	Round Top Recessed for 1/8″ Tile (ZB and ZN only)		**N/C**
–Z	Round Top Recessed for 1-1/4″ Terrazzo (ZB and ZN only)		**160.00**

For additional product information, please visit www.zurn.ca

**Regularly furnished unless otherwise specified.*

⏲ *This symbol denotes a product that is engineered to reduce installation and rework time.*

Z1402 HEAVY-DUTY NON-ADJUSTABLE FLOOR CLEANOUT

ENGINEERING SPECIFICATION

Zurn Z1402 tuf-top non-adjustable floor cleanout features Dura-Coated cast iron body, gas and watertight ABS tapered thread plug, and round scoriated cast iron heavy-duty secured cover and frame.

A Pipe Size/ Outlet Type	Dimensions in inches [mm]		Approximate Weight lb [kg]
	C	E Body Height Dimensions	
Neo-Loc (NL)			
2NL	4-1/8 [105]	2-3/4 [70]	5 [2]
3NL	5-1/8 [130]		8 [4]
4NL	6-1/8 [156]		10 [5]
5NL	7-1/4 [184]	3-5/8 [92]	15 [7]
6NL	8-1/4 [210]		17 [8]
8NL	9-1/4 [235]		22 [10]
No-Hub (NH)			
3NH	4-1/8 [105]	2-3/4 [70]	5 [2]
4NH	5-1/8 [130]		8 [4]
6NH	7-1/4 [184]	3-5/8 [92]	15 [7]
8NH	9-1/4 [235]		22 [10]

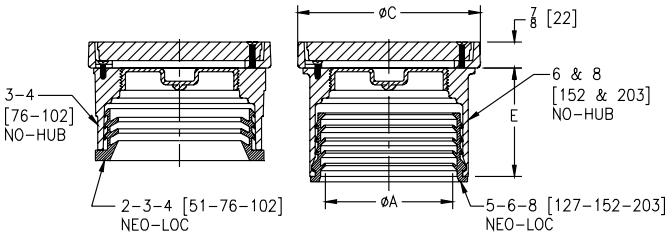

PREFIXES	DESCRIPTION	A PIPE SIZE	LIST PRICE
Z1402*	Dura-Coated Cast Iron	2″	**313.00**
		3″	**352.00**
		4″	**380.00**
		5″	**567.00**
		6″	**567.00**
		8″	**885.00**
ZB1402	D.C.C.I. with Polished Bronze Light-Duty Top (Deduct 1/2″ from 7/8″ Dim.)	2″	**447.00**
		3″	**490.00**
		4″	**522.00**
		5″	**747.00**
		6″	**747.00**
		8″	**1,197.00**
ZN1402	D.C.C.I. with Polished Nickel Bronze Light-Duty Top (Deduct 1/2″ from 7/8″ Dim.)	2″	**471.00**
		3″	**515.00**
		4″	**547.00**
		5″	**789.00**
		6″	**789.00**
		8″	**1,258.00**
ZS1402	D.C.C.I. with Polished Stainless Steel Heavy-Duty Top (Add 3/16″ to 7/8″ Dim.)	2″	**677.00**
		3″	**941.00**
		4″	**1,051.00**
		5″	**1,062.00**
		6″	**1,370.00**
		8″	**1,722.00**

OUTLET (SPECIFY PIPE SIZE IN INCHES AND TYPE OF OUTLET)				
TYPE	DESCRIPTION	PIPE SIZE/OUTLET TYPE	E BODY HT. DIM.	ADD
NH	No-Hub	3NH, 4NH, 6NH, 8NH	See Chart	**N/C**
NL	Neo-Loc	2NL, 3NL, 4NL, 5NL, 6NL, 8NL	See Chart	**N/C**

SUFFIXES			ADD
–BP	Bronze Plug	2″, 3″, 4″, 5″	**156.00**
		6″, 8″	**491.00**
–CM	Carpet Marker		**50.00**
–DX	Round ZB or ZN Top with Dex-O-Tex Flange (2″, 3″, 4″, 5″ sizes only)		**120.00**
–G	Galvanized Cast Iron		**108.00**
–HD	Heavy-Duty Veneer Top - Add 1/8″ to 7/8″ Dim. (ZB and ZN only)		**108.00**
–T	Square Top		**160.00**
⏲ **–TC**	Neo-Loc Test Cap Gasket (2″, 3″, 4″ NL Bottom Outlet Only)		**26.00**
–VP	Vandal-Proof Screws		**101.00**

**Regularly furnished unless otherwise specified.*

⏲ This symbol denotes a product that is engineered to reduce installation and rework time.

For additional product information, please visit www.zurn.ca

Z1404 HEAVY-DUTY FLOOR ACCESS HOUSING

ENGINEERING SPECIFICATION

Zurn Z1404 floor access housing features Dura-Coated cast iron with round frame and scoriated cast iron heavy-duty secured cover complete with adjusting setscrews.

A Pipe Size/Outlet Type	C inches [mm]	Approximate Weight lb [kg]
Slip Joint (SJ)		
3SJ	6-1/8 [156]	3 [1]
4SJ	7-1/4 [184]	4 [2]
6SJ	9-1/4 [235]	8 [4]

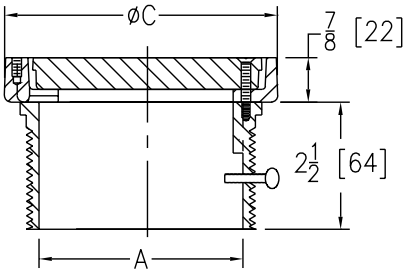

PREFIXES	DESCRIPTION	A PIPE SIZE	LIST PRICE
Z1404*	Dura-Coated Cast Iron	3″, 4″	439.00
		6″	582.00
ZN1404	D.C.C.I. with Polished Nickel Bronze Light-Duty Top (Deduct 1/2″ from 7/8″ Dim.)	3″, 4″	668.00
		6″	852.00
ZS1404	D.C.C.I. with Polished Stainless Steel Heavy-Duty Top (Add 3/16″ to 7/8″ Dim.)	3″, 4″	POA
		6″	POA

OUTLET (SPECIFY PIPE SIZE IN INCHES AND TYPE OF OUTLET)			
TYPE	DESCRIPTION	PIPE SIZE/OUTLET TYPE	ADD
SJ	Slip Joint	3SJ, 4SJ, 6SJ	N/C

SUFFIXES		ADD
-HD	Heavy-Duty Veneer Top (Add 1/8″ to 2-1/2″ Dim. for ZN only)	108.00
-VP	Vandal-Proof Screws	101.00

Z1406 HEAVY-DUTY ADJUSTABLE SPIGOT CLEANOUT

ENGINEERING SPECIFICATION

Zurn Z1406 adjustable floor cleanout uses spigot connection for caulking into hub. Features Dura-Coated cast iron body, gas and watertight ABS plug, and cast iron housing with round scoriated secured cast iron heavy-duty cover adjustable to finished floor.

A Pipe Size/ Outlet Type	B N.P.T.	Dimensions in inches [mm]			Approximate Weight lb [kg]
		C	Y Min.	Y Max.	
Spigot (SP)					
3SP	2	6-1/8 [156]	7/8 [22]	2 [51]	11 [5]
4SP	3-1/2	7-1/4 [184]			15 [7]
6SP	3-1/2	9-1/4 [235]			23 [10]

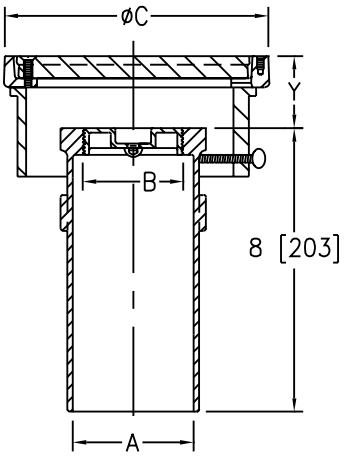

PREFIXES	DESCRIPTION	A PIPE SIZE	LIST PRICE
Z1406*	Dura-Coated Cast Iron	3″	618.00
		4″	655.00
		6″	1,036.00
ZN1406	D.C.C.I. with Polished Nickel Bronze Light-Duty Top (Deduct 1/2″ from 'Y' Dim.)	3″	847.00
		4″	885.00
		6″	1,306.00
ZS1406	D.C.C.I. with Polished Stainless Steel Heavy-Duty Top (Add 3/16″ to 'Y' Dim.)	3″	POA
		4″	POA
		6″	POA

OUTLET (SPECIFY PIPE SIZE IN INCHES AND TYPE OF OUTLET)			
TYPE	DESCRIPTION	PIPE SIZE/OUTLET TYPE	ADD
SP	Spigot	3SP, 4SP, 6SP	N/C

SUFFIXES			ADD
–AR	Acid Resisting Epoxy Coated Finish		336.00
–BP	Bronze Plug	3″, 4″	164.00
		6″	516.00
–CF	Carpet Flange (ZN only)		300.00
–CM	Carpet Marker		50.00
–DC	Duresist Cover		318.00
–DX	Round Top with Dex-O-Tex Flange (2″ thru 4″ sizes only)		495.00
–G	Galvanized Cast Iron		235.00
–HD	Heavy-Duty Veneer Top (Add 1/8″ to 'Y' Dim. for ZN only)		108.00
–SG	Solid Gasketed Cover		318.00
–SM	Special Marking Stamped on Top		225.00
–T	Square Top		160.00
–TX	Square Top Recessed for 1/8″ Tile (ZN only)		160.00
–VP	Vandal-Proof Screws		101.00
–X	Round Top Recessed for 1/8″ Tile (ZN only)		N/C

For additional product information, please visit www.zurn.ca

**Regularly furnished unless otherwise specified.*

This symbol denotes a product that is engineered to reduce installation and rework time.

Z1440 CLEANOUT FERRULE WITH PLUG

ENGINEERING SPECIFICATION

Zurn Z1440 cleanout features Dura-Coated cast iron body with gas and watertight ABS tapered thread plug.

A Pipe Size/Outlet Type	E Body Height Dimensions inches [mm]	Approximate Weight lb [kg]
No-Hub (NH)		
2NH	2-1/2 [64]	2 [1]
3NH	2-3/4 [70]	4 [2]
4NH	3 [76]	5 [2]
6NH	3 [76]	8 [4]
8NH	3-1/2 [89]	13 [6]

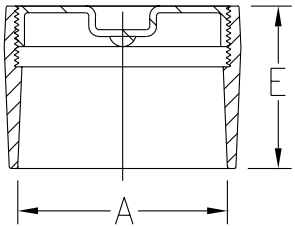

PREFIXES	DESCRIPTION		A PIPE SIZE	LIST PRICE
Z1440*	D.C.C.I. and ABS Plug		2″	156.00
			3″	156.00
			4″	156.00
			6″	511.00
			8″	946.00
OUTLET (SPECIFY PIPE SIZE IN INCHES AND TYPE OF OUTLET)				
TYPE	DESCRIPTION	PIPE SIZE/OUTLET TYPE	E BODY HT. DIM.	ADD
NH	No-Hub	2NH, 3NH, 4NH, 6NH, 8NH	See Chart	N/C
SUFFIXES				ADD
–BP	Bronze Plug		2″, 3″, 4″	164.00
			6″, 8″	516.00
–G	Galvanized Cast Iron			207.00

Z1445 CLEANOUT TEE

ENGINEERING SPECIFICATION

Zurn Z1445 cleanout tee features Dura-Coated cast iron body with gas and watertight ABS tapered thread plug.

A Pipe Size/ Outlet Type	Dimensions in inches [mm]			Approximate Weight lb [kg]
	B	C	D	
No Hub (NH)				
2NH	6-3/8 [162]	3-3/16 [81]	1-3/4 [44]	8 [4]
3NH	7-3/4 [197]	3-7/8 [98]	2-1/2 [64]	15 [7]
4NH	8-7/8 [225]	4-7/16 [113]	3 [76]	16 [7]
6NH	12-1/2 [317]	6-1/4 [159]	4-5/16 [109]	35 [16]
8NH	17 [432]	8-1/2 [216]	6-3/8 [162]	49 [22]

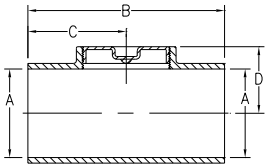

PREFIXES	DESCRIPTION		A PIPE SIZE	LIST PRICE
Z1445*	Dura-Coated Cast Iron		2″	345.00
			3″	410.00
			4″	619.00
			6″	1,698.00
			8″	2,147.00
OUTLET (SPECIFY PIPE SIZE IN INCHES AND TYPE OF OUTLET)				
TYPE	DESCRIPTION	PIPE SIZE/OUTLET TYPE	E BODY HT. DIM.	ADD
NH	No-Hub	2NH, 3NH, 4NH, 6NH, 8NH	See Chart	N/C
SUFFIXES				ADD
–BP	Bronze Plug	2″, 3″, 4″		164.00
		6″, 8″		516.00
–G	Galvanized Cast Iron			330.00

*Regularly furnished unless otherwise specified.

This symbol denotes a product that is engineered to reduce installation and rework time.

For additional product information, please visit www.zurn.ca

Z1449 CLEANOUT FERRULE WITH PLUG

ENGINEERING SPECIFICATION

Zurn Z1449 cleanout ferrule features Dura-Coated cast iron body with gas and watertight ABS countersunk plug.

A Pipe Size/Outlet Type	B N.P.T.	Approximate Weight lb [kg]
Spigot (SP)		
3SP	2	6 [3]
4SP	3-1/2	8 [4]
6SP	3-1/2	13 [6]

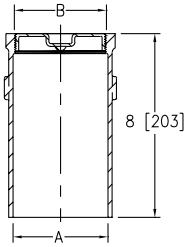

PREFIXES	DESCRIPTION	A PIPE SIZE	LIST PRICE
Z1449*	Dura-Coated Cast Iron with ABS Plug	3″	**179.00**
		4″	**219.00**
		6″	**457.00**
OUTLET (SPECIFY PIPE SIZE IN INCHES AND TYPE OF OUTLET)			
TYPE	**DESCRIPTION**	**PIPE SIZE/OUTLET TYPE**	**E BODY HT. DIM.**	**ADD**
SP	Spigot	3SP, 4SP, 6SP	See Chart	**N/C**
SUFFIXES				**ADD**
–A	Raised Head Plug			**N/C**
–BP	Bronze Plug		3″, 4″	**164.00**
			6″	**516.00**
–G	Galvanized Cast Iron			**207.00**

Z1454 ADJUSTABLE FLOOR CLEANOUT WITH FLASHING FLANGE

ENGINEERING SPECIFICATION

Zurn Z1454 adjustable floor cleanout features Dura-Coated cast iron body, gas and watertight ABS tapered thread plug, and round scoriated Dura-Coated cast iron adjustable with secured cover top complete with membrane flashing flange.

A Pipe Size/Outlet Type	Approximate Weight lb [kg]
Inside Caulk (IC)	
2IC, 3IC	33 [15]
4IC	34 [15]
Threaded (IP)	
2IP, 3IP	33 [15]
4IP	34 [15]

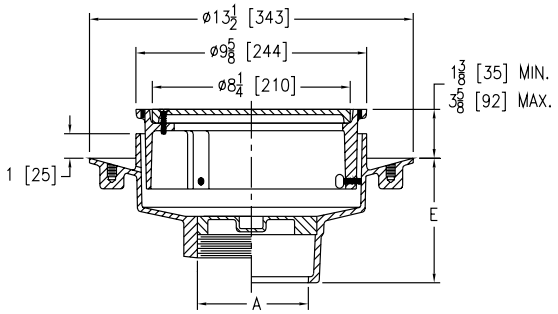

PREFIXES	DESCRIPTION	A PIPE SIZE	LIST PRICE
Z1454*	Dura-Coated Cast Iron	2″, 3″	**1,274.00**
		4″	**1,311.00**
ZN1454	D.C.C.I. with Polished Nickel Bronze Top (Add 3/16″ to 1-3/8″ min. - 3-5/8″ max. dim.)	2″, 3″	**1,861.00**
		4″	**1,902.00**
OUTLET (SPECIFY PIPE SIZE IN INCHES AND TYPE OF OUTLET)			
TYPE	**DESCRIPTION**	**PIPE SIZE/OUTLET TYPE**	**E BODY HT. DIM.**	**ADD**
IC	Inside Caulk	2IC, 3IC, 4IC	5-1/4″	**N/C**
IP	Threaded	2IP, 3IP, 4IP	4-1/4″	**N/C**
SUFFIXES				**ADD**
–C	Clamp Collar			**N/C**
–G	Galvanized Cast Iron			**450.00**
–VP	Vandal-Proof Secured Top			**158.00**

For additional product information, please visit www.zurn.ca

**Regularly furnished unless otherwise specified.*

This symbol denotes a product that is engineered to reduce installation and rework time.

Z1456 DECK CLEANOUT

ENGINEERING SPECIFICATION

Zurn ZANB1456 deck cleanout features nickel bronze body with scoriated deck plug and O-ring seal.

A Pipe Size/ Outlet Type	Dimensions in inches [mm]		Approximate Weight lb [kg]
	B	C	
Inside Caulk (IC)			
3IC	5 [127]	6 [152]	4 [2]
4IC	6 [152]	7-3/8 [187]	6 [3]
6IC	8 [203]	9-3/8 [238]	12 [5]
Threaded (IP)			
3IP	3-1/2 [89]	4-7/8 [124]	4 [2]
4IP	4-1/2 [114]	6 [152]	6 [3]
6IP	7-7/8 [200]	9-3/8 [238]	12 [5]
8IP	9-7/8 [251]	11 [279]	16 [7]

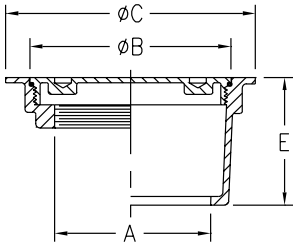

PREFIXES	DESCRIPTION	A PIPE SIZE	LIST PRICE
ZANB1456*	Nickel Bronze with Polished Scoriated Top	3″	744.00
		4″	825.00
		6″	1,362.00
		8″	2,770.00

OUTLET (SPECIFY PIPE SIZE IN INCHES AND TYPE OF OUTLET.				
TYPE	DESCRIPTION	PIPE SIZE/OUTLET TYPE	E BODY HT. DIM.	ADD
IC	Inside Caulk	3IC, 4IC	3-1/4″	N/C
		6IC	3-1/2″	N/C
IP	Threaded	3IP, 4IP	1-1/2″	N/C
		6IP	1-5/8″	N/C
		8IP	2″	N/C

SUFFIXES		ADD
–SW	Extra Spanner Wrench	138.00

Z1457 FLOOR ACCESS COVER

ENGINEERING SPECIFICATION

Zurn ZANB1457 floor access cover features nickel bronze body with round, scoriated secured cover.

A Pipe Size/ Outlet Type	Dimensions in inches [mm]		Approximate Weight lb [kg]
	B	C	
Threaded (IP)			
2IP	4-1/2 [114]	5-1/2 [140]	4 [2]
3IP	4-1/2 [114]	5-1/2 [140]	4 [2]
4IP	5-3/4 [146]	6-3/4 [171]	5 [2]
5IP	7 [178]	8 [203]	6 [3]
6IP	8-1/4 [210]	9-1/2 [241]	8 [4]
8IP	10-1/4 [260]	11-1/2 [292]	12 [5]

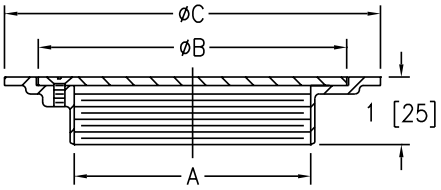

PREFIXES	DESCRIPTION	A PIPE SIZE	LIST PRICE
ZANB1457*	Nickel Bronze with Polished Scoriated Cover	2″	522.00
		3″	734.00
		4″	825.00
		5″	1,170.00
		6″	1,213.00
		8″	1,730.00
ZAB1457	Bronze with Polished Scoriated Cover	2″	498.00
		3″	696.00
		4″	792.00
		5″	1,129.00
		6″	1,154.00
		8″	1,646.00

OUTLET (SPECIFY PIPE SIZE IN INCHES AND TYPE OF OUTLET.				
TYPE	DESCRIPTION	PIPE SIZE/OUTLET TYPE	E BODY HT. DIM.	ADD
IP	Threaded	2IP, 3IP, 4IP, 5IP, 6IP, 8IP	See Chart	N/C

SUFFIXES		ADD
–VP	Vandal-Proof Screws	116.00

*Regularly furnished unless otherwise specified.

This symbol denotes a product that is engineered to reduce installation and rework time.

For additional product information, please visit www.zurn.ca

Z1460 SQUARE WALL ACCESS PANEL

ENGINEERING SPECIFICATION

Zurn ZANB1460 square wall access panel and frame features smooth, stainless steel panel secured to nickel bronze frame, set flush to finished wall plane, and securing lugs.

Product Designation	Dimensions in inches [mm]		Approximate Weight lb [kg]
	A Frame Size	C Opening Size	
-7	7 x 7 [178]	6 x 6 [152]	3 [1]
-9	9 x 9 [229]	8 x 8 [203]	5 [2]
-10	10 x 10 [254]	9 x 9 [229]	7 [3]
-11	11 x 11 [279]	10 x 10 [254]	10 [5]

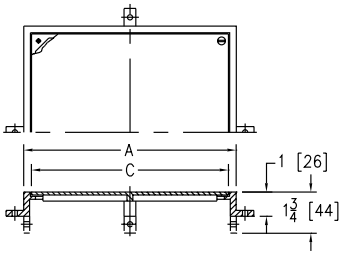

PREFIXES	DESCRIPTION	PRODUCT DESIG.	A FRAME SIZE	LIST PRICE
ZANB1460*	Nickel Bronze with Polished Scoriated Cover	–7	7″ x 7″	443.00
		–9	9″ x 9″	582.00
		–10	10″ x 10″	614.00
		–11	11″ x 11″	709.00
ZAB1460	Bronze with Polished Scoriated Cover	–7	7″ x 7″	404.00
		–9	9″ x 9″	524.00
		–10	10″ x 10″	567.00
		–11	11″ x 11″	612.00
SUFFIXES				**ADD**
–SC	Scoriated Cover			N/C
–VP	Vandal-Proof Screws			101.00

Z1461 SQUARE HINGED ACCESS PANEL

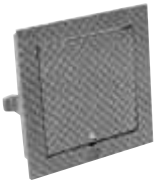

ENGINEERING SPECIFICATION

Zurn Z1461 square hinged access panel features Dura-Coated cast iron, secured access panel, and frame with anchor lugs. Set flush with wall or floor for light-duty applications.

Product Designation	Dimensions in inches [mm]		Approximate Weight lb [kg]
	A Frame Size	C	
-12	12 x 12 [305]	10 [254]	11 [5]

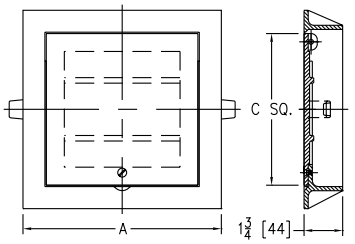

PREFIXES	DESCRIPTION	PRODUCT DESIG.	A FRAME SIZE	LIST PRICE
Z1461*	Dura-Coated Cast Iron with Scoriated Cover	–12	12″ x 12″	457.00
ZAB1461	Bronze with Polished Scoriated Cover	–12	12″ x 12″	1,114.00
ZANB1461	Nickel Bronze with Polished Scoriated Cover	–12	12″ x 12″	1,171.00
SUFFIXES				**ADD**
–VP	Vandal-Proof Screws			53.00

For additional product information, please visit www.zurn.ca

**Regularly furnished unless otherwise specified.*

This symbol denotes a product that is engineered to reduce installation and rework time.

Z1462 SECURED WALL ACCESS PANEL

ENGINEERING SPECIFICATION

Zurn ZANB1462 secured wall access panel features square, smooth nickel bronze panel, frame with beveled edge, and anchor lugs for over wall installation.

PREFIXES	DESCRIPTION	PRODUCT DESIG.	LIST PRICE
ZANB1462*	Nickel Bronze with Polished Cover	–6	968.00
		–8	1,027.00
		–10	1,291.00
		–12	1,394.00
SUFFIXES			**ADD**
–VP	Vandal-Proof Screws		53.00

Product Designation	Dimensions in inches [mm]				Approximate Weight lb [kg]
	A Square	B Square	C Square	D	
-6	5-15/16 [151]	7-1/2 [191]	6-1/2 [165]	1-1/4 [32]	3 [1]
-8	7-1/4 [184]	9-3/4 [248]	7-5/8 [194]	1-5/16 [33]	5 [2]
-10	9-3/8 [238]	11-7/8 [302]	9-3/4 [248]	1-5/16 [33]	7 [3]
-12	11-3/8 [289]	13-7/8 [352]	11-3/4 [298]	1-5/16 [33]	11 [5]

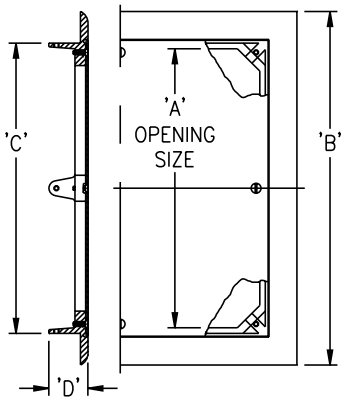

Z1463 ROUND SCORIATED ACCESS COVER

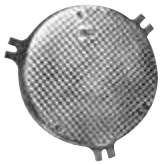

ENGINEERING SPECIFICATION

Zurn ZANB1463 features access panel and frame, round, scoriated, nickel bronze panel secured to frame, set flush to finished wall plane or floor, and anchor lugs.

PREFIXES	DESCRIPTION	A PIPE SIZE	LIST PRICE
ZANB1463*	Nickel Bronze with Polished Scoriated Cover	2", 3", 4"	322.00
		5", 6", 8"	861.00
ZAB1463	Bronze with Polished Scoriated Cover	2", 3", 4"	306.00
		5", 6", 8"	813.00
SUFFIXES			**ADD**
–VP	Vandal-Proof Screws		53.00

Product Designation	Dimensions in inches [mm]				Approximate Weight lb [kg]
	Nominal Pipe Size	B	C	D	
-7	2 [51], 3 [76], 4 [102]	6-5/8 [168]	3/4 [19]	7-1/2 [191]	6 [3]
-11	5 [127], 6 [152], 8 [203]	10-3/4 [273]	1 [25]	11-7/8 [302]	12 [5]

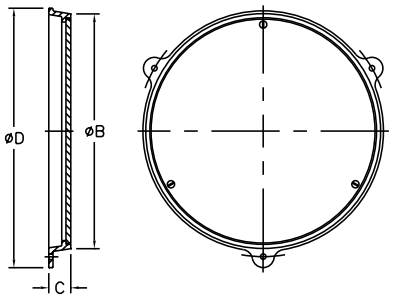

*Regularly furnished unless otherwise specified.

This symbol denotes a product that is engineered to reduce installation and rework time.

For additional product information, please visit www.zurn.ca

Z1464 WATER SUPPLY CONTROL BOX ASSEMBLY

ENGINEERING SPECIFICATION

Zurn ZS1464 water supply control box assembly features 18-8 Type 304 stainless steel, cylinder lock and hinged cover, bronze control valves, screwdriver stops, and atmospheric type vacuum breaker.

A Opening Size inches [mm]	Approximate Weight lb [kg]
8-1/2 [216] x 8-1/2 [216]	17 [8]

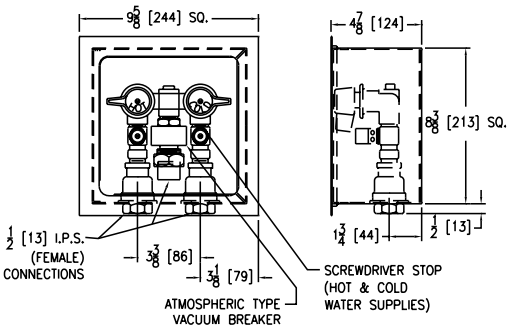

PREFIXES	DESCRIPTION	A OPENING SIZE	LIST PRICE
ZS1464*	Type 304 Stainless Steel	8-1/2″ x 8-1/2″	3,524.00
SUFFIXES			**DEDUCT**
–LM	Less Internal Mixing Valve Assembly		-946.00

Z1468 ACCESS COVER AND PLUG

ENGINEERING SPECIFICATION

Zurn ZS1468 round stainless steel wall access cover comes complete with securing screw and bronze raised hex head plug.

Product Designation	Dimensions in inches [mm]		Approximate Weight lb [kg]
	A Pipe Size	C	
-1.25	1-1/4 [32]	4 [102]	4 [2]
-1.5	1-1/2 [38]		
-2	2 [51]	5 [127]	5 [2]
-2.5	2-1/2 [64]		
-3	3 [76]		
-3.5	3-1/2 [89]		6 [3]
-4	4 [102]	7 [178]	8 [4]
-5	5 [127]		11 [5]
-6	6 [152]	9 [229]	14 [6]
-8	8 [203]	11 [279]	25 [11]

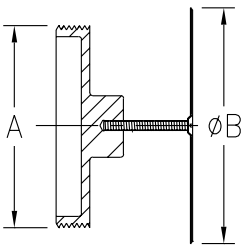

PREFIXES	DESCRIPTION	A PIPE SIZE	LIST PRICE
ZS1468*	Bronze with Stainless Steel Cover	1-1/4″, 1-1/2″	158.00
		2″	174.00
		2-1/2″	187.00
		3″	294.00
		3-1/2″	294.00
		4″	340.00
		5″	702.00
		6″	740.00
		8″	916.00
ZAB1468	Bronze Plug with Polished Bronze Cover	1-1/4″, 1-1/2″	138.00
		2″	152.00
		2-1/2″	168.00
		3″	261.00
		3-1/2″	261.00
		4″	300.00
		5″	569.00
		6″	646.00
		8″	895.00
SUFFIXES			**ADD**
–SL	Screws Longer Than 3-1/2″ (Per Inch)		18.00
–VP	Vandal-Proof Screw		90.00

For additional product information, please visit www.zurn.ca

**Regularly furnished unless otherwise specified.*

This symbol denotes a product that is engineered to reduce installation and rework time.

Z1469 ROUND ACCESS COVER

ENGINEERING SPECIFICATION

Zurn ZS1469 round stainless steel access cover comes complete with securing screw.

Product Designation	Dimensions in inches [mm]		Approximate Weight lb [kg]
	A Cover Diameter	Nominal Pipe Size	
-4	4 [102]	2 [51], 3 [76], 3-1/2 [89]	1 [0.5]
-5	5 [127]	2 [51], 3 [76], 3-1/2 [89]	1 [0.5]
-7	7 [178]	4 [102], 5 [127]	2 [1]
-9	9 [229]	6 [152]	3 [1]
-11	11 [279]	8 [203]	4 [2]

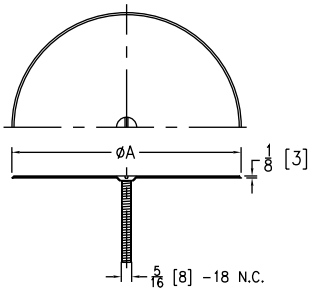

PREFIXES	DESCRIPTION	A PIPE SIZE	LIST PRICE
ZS1469*	Type 304 Stainless Steel Polished Cover	2″, 3″, 3-1/2″	105.00
		4″, 5″	145.00
		6″	291.00
		8″	428.00
ZAB1469	Bronze Polished Cover	2″, 3″, 3-1/2″	101.00
		4″, 5″	138.00
		6″	277.00
		8″	409.00
SUFFIXES			**ADD**
–SL	Screws Longer Than 3-1/2″ (Per Inch)		18.00
–VP	Vandal-Proof Screw		90.00

Z1470 BRONZE CLEANOUT PLUG

ENGINEERING SPECIFICATION

Zurn ZARB1470 bronze cleanout plug is a countersunk, ABS tapered thread plug.

Product Designation	Dimensions in inches [mm]		Approximate Weight lb [kg]
	A Pipe Size	E Body Height Dimensions	
-1.25	1-1/4 [32]	9/16 [14]	.5 [0.23]
-1.5	1-1/2 [38]	5/8 [16]	.5 [0.23]
-2	2 [51]	1/2 [13]	.75 [0.34]
-2.5	2-1/2 [64]	3/4 [19]	.75 [0.34]
-3	3 [76]	3/4 [19]	1 [0.5]
-3.5	3-1/2 [89]	3/4 [19]	1 [0.5]
-4	4 [102]	3/4 [19]	1.5 [.06]
-5	5 [127]	3/4 [19]	1.5 [.06]
-6	6 [152]	3/4 [19]	3 [1]
-8	8 [203]	3/4 [19]	7 [3]

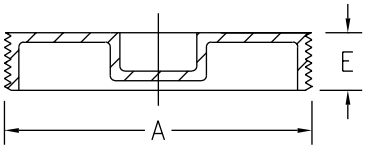

PREFIXES	DESCRIPTION	A PIPE SIZE	LIST PRICE
ZARB1470*	Plain Bronze	1-1/4″, 1-1/2″	52.00
		2″	66.00
		2-1/2″	84.00
		3″	194.00
		3-1/2″	194.00
		4″	194.00
		5″	369.00
		6″	447.00
		8″	491.00
SUFFIXES			**ADD**
–A	Raised Head		N/C
–PW	Plug Wrench		84.00

*Regularly furnished unless otherwise specified.

This symbol denotes a product that is engineered to reduce installation and rework time.

For additional product information, please visit www.zurn.ca

Z1471 AIR INLET

ENGINEERING SPECIFICATION

Zurn ZANB1471 fresh air inlet features round nickel bronze, crowned and perforated, complete with 4-point contact locking device.

Product Designation	Dimensions in inches [mm]				Open Area sq in [cm²]	Approximate Weight lb [kg]
	A Pipe Size	C	D	F		
-3	3 [76]	8 [203]	3/4 [19]	6-1/4 [159]	9 [58]	3 [1]
-4	4 [102]					
-5	5 [127]	12 [305]			28 [181]	7 [3]
-6	6 [152]					
-8	8 [203]	15 [381]			55 [355]	9 [4]
-10	10 [254]					

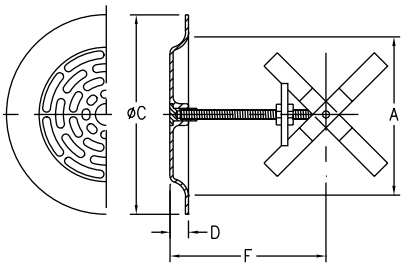

PREFIXES	DESCRIPTION	PRODUCT DESIGNATION	A PIPE SIZE	LIST PRICE
ZANB1471*	Nickel Bronze with Polished Cover	-3	3″	627.00
		-4	4″	627.00
		-5	5″	1,060.00
		-6	6″	1,060.00
		-8	8″	1,691.00
		-10	10″	1,691.00
ZAB1471	Bronze with Polished Cover	-3	3″	594.00
		-4	4″	594.00
		-5	5″	1,007.00
		-6	6″	1,007.00
		-8	8″	1,608.00
		-10	10″	1,608.00
SUFFIXES				**ADD**
–CP	Chrome Plated			326.00

Z1474 HEAVY-DUTY CLEANOUT HOUSING

ENGINEERING SPECIFICATION

Zurn Z1474 heavy-duty cleanout housing features Dura-Coated cast iron body, integral anchor flange, and secured scoriated cover with lifting device.

A Pipe Size inches [mm]	Approximate Weight lb [kg]
8-3/8 [213]	40 [18]

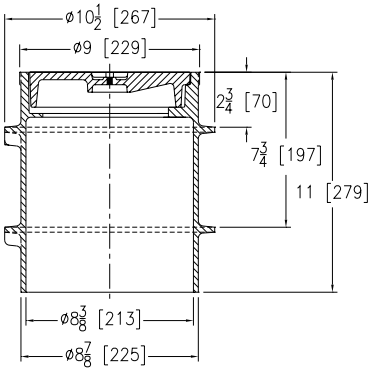

PREFIXES	DESCRIPTION	A PIPE SIZE	LIST PRICE
Z1474*	Dura-Coated Cast Iron	8-3/8″	1,164.00
ZN1474	D.C.C.I. with Polished Nickel Bronze Top	8-3/8″	2,063.00
SUFFIXES			**ADD**
–DC	Duresist Cover		554.00
–G	Galvanized Cast Iron		544.00
–N	With Internal Cleanout (See Z1440)	4″	156.00
		6″	511.00
–SG	Solid Gasketed Cover		344.00
–VP	Vandal-Proof Screw		53.00

For additional product information, please visit www.zurn.ca

**Regularly furnished unless otherwise specified.*

This symbol denotes a product that is engineered to reduce installation and rework time.

Z1602 ADJUSTABLE ROUND MEDIUM-DUTY NICKEL BRONZE CLEANOUT

ENGINEERING SPECIFICATION

Zurn ZN1602 Adjustable Floor Cleanout features a Dura-Coated cast iron body, polished nickel bronze adjustable head and gasketed, secured scoriated cover.

A Pipe Size inches [mm]	E Body Height Dimensions [mm]	Approximate Weight lb [kg]
2 - 3 - 4 [51 - 76 - 102}	3-3/4 [95]	6 [3]

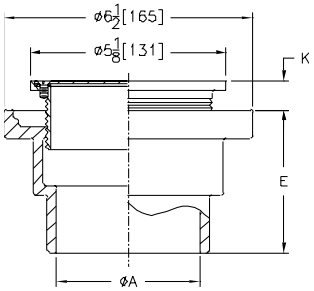

PREFIXES	DESCRIPTION	A PIPE SIZE	LIST PRICE
ZN1602*	Polished Nickel Bronze Top	2", 3", 4"	372.00
SUFFIXES			**ADD**
–CM	Carpet Marker		N/C
–GB	Galvanized Body Only		103.00
–SP	Seal Plug		46.00
–T	Square Top		65.00
–TX	Square Top Recessed for 1/8" [3mm] Tile		65.00
–VP	Vandal-Proof Screws		41.00
–X	Round Top Recessed for 1/8" [3mm] Tile		N/C
–1600	Wide Flange Body		40.00

Z1612 ADJUSTABLE ROUND HEAVY-DUTY NICKEL BRONZE CLEANOUT

ENGINEERING SPECIFICATION

Zurn ZXN-1612 Adjustable Floor Cleanout features a Dura-Coated cast iron body, polished nickel bronze adjustable head and gasketed, secured, scoriated heavy-duty cover.

A Pipe Size inches [mm]	E Body Height Dimensions [mm]	Approximate Weight lb [kg]
2 - 3 - 4 [51-76-102}	3-3/4 [95]	8 [4]

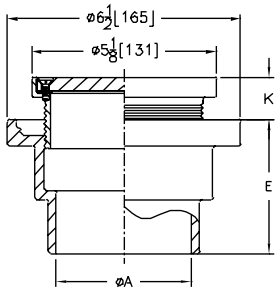

PREFIXES	DESCRIPTION	A PIPE SIZE	LIST PRICE
ZX1612	Heavy Duty Cast Iron Top	2", 3", 4"	314.00
ZXN1612	Heavy Duty Nickel Bronze Top	2", 3", 4"	465.00
SUFFIXES			**ADD**
–CM	Carpet Marker		N/C
–G	Galvanized Complete (ZX Only)		173.00
–GB	Galvanized Body Only		103.00
–GG	Galvanized Top Assembly (ZX Only)		73.00
–SP	Seal Plug		46.00
–VP	Vandal-Proof Screws		41.00
–1600	Wide Flange Body		40.00

**Regularly furnished unless otherwise specified.*

This symbol denotes a product that is engineered to reduce installation and rework time.

For additional product information, please visit www.zurn.ca

Z1615 CAST IRON LINE OR FLOOR CLEANOUT - NON-ADJUSTABLE

ENGINEERING SPECIFICATION

Zurn Z1615 wide flange Floor or Line Cleanout features a Dura-Coated cast iron body with secured, scoriated, and gasketed cover.

PREFIXES	DESCRIPTION	A PIPE SIZE	LIST PRICE
Z1615	Cast Iron*	2", 3", 4"	170.00
SUFFIXES			**ADD**
–G	Galvanized Complete		120.00
–VP	Vandal-Proof Screws		41.00

A Pipe Size inches [mm]	E Body Height Dimensions [mm]	Approximate Weight lb [kg]
2 - 3 - 4 [51-76-102}	3-3/4 [95]	8 [4]

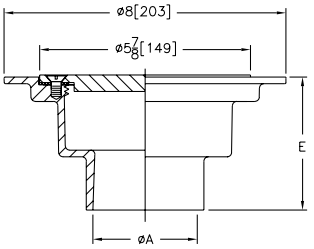

Z1616 CAST IRON LINE OR FLOOR CLEANOUT - NON-ADJUSTABLE

ENGINEERING SPECIFICATION

Zurn Z1616 Floor or Line Cleanout featuring a Dura-Coated cast iron body with secured, scoriated, and gasketed cover.

PREFIXES	DESCRIPTION	A PIPE SIZE	LIST PRICE
Z1616	Cast Iron*	2", 3", 4"	170.00
SUFFIXES			**ADD**
–G	Galvanized Complete		120.00
–VP	Vandal-Proof Screws		41.00

A Pipe Size inches [mm]	E Body Height Dimensions [mm]	Approximate Weight lb [kg]
2 - 3 - 4 [51-76-102}	3-3/4 [95]	6 [3]

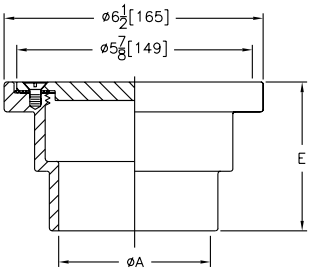

Z1666 SEAL OR TEST PLUG

ENGINEERING SPECIFICATION

Zurn Z1666 Seal or Test Plug

PREFIXES	DESCRIPTION	A PIPE SIZE	LIST PRICE
Z1666		1-1/2", 2", 3", 4"	105.00
SUFFIXES			**ADD**
–CH	Centre Hole for Screw		53.00

A Pipe Size inches [mm]	Approximate Weight lb [kg]
1-1/2 - 2 - 3 - 4 [38-51-76-102]	6 [3]

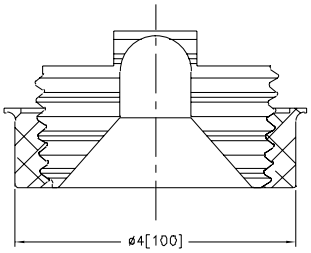

Z1666-1 URINAL CLEANOUT

ENGINEERING SPECIFICATION

Zurn Z1666-1 Urinal Cleanout with 4" [102 mm] diameter stainless steel access cover and centre securing screw.

PREFIXES	DESCRIPTION	A PIPE SIZE	LIST PRICE
Z1666-1		1-1/2", 2", 3", 4"	141.00
SUFFIXES			**ADD**
–VP	Centre Hole for Screw		53.00
–5			91.00
–7			110.00
–9			184.00

A Pipe Size inches [mm]	Approximate Weight lb [kg]
1-1/2 - 2 [38-51]	6 [3]

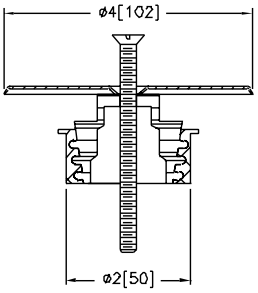

**Regularly furnished unless otherwise specified.*

This symbol denotes a product that is engineered to reduce installation and rework time.

For additional product information, please visit www.zurn.ca

NOTES

SD1021

WATER HAMMER ARRESTORS

Z1700 SHOKTROLS **322**

Z1712 ACCUMUTROL **322**

Z1700 SHOKTROLS

ENGINEERING SPECIFICATION

Where required in piping systems, properly sized water hammer arrestors require Zurn Z1700 (specify size). Features nesting type bellows contained within a casing having sufficient displacement volume to dissipate the calculated kinetic energy generated in the piping system. Both casing and bellows are constructed of Type 304 stainless steel.

NOTE:

All sizes of Zurn Z1700 Shoktrol water hammer arrestors comply with the following specifications:
PDI WH-201
ANSI A112.26.1M
ASSE 1010

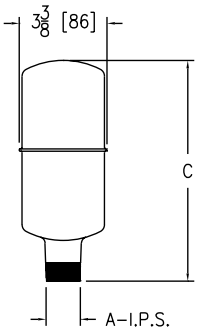

Size	Dimensions in inches [mm] A	Dimensions in inches [mm] C	Approximate Weight lb [kg]	Fixture Unit Capacity
100	3/4 [19]	3-1/2 [89]	1 [0.5]	1-11
200			1-1/2 [0.68]	12-32
300	1 [25]	4-1/2 [114]	1-3/4 [0.79]	33-60
400		6-5/8 [168]	2-3/4 [1.25]	61-113
500		7-1/2 [191]	3-1/4 [1.5]	114-154
600		8-1/2 [216]	3-3/4 [1.7]	155-330

PREFIXES	DESCRIPTION	SIZE	LIST PRICE
Z*	Zurn Shoktrol Water Hammer Arrestors are regularly furnished in all stainless steel construction. Pipe threads are accurately machined to assure tight connection. 3/4″ male I.P.S. inlet is standard for sizes 100 and 200, while 1″ male I.P.S. inlet is standard for sizes 300 thru 600.	100	**410.00**
		200	**582.00**
		300	**998.00**
		400	**1,848.00**
		500	**2,371.00**
		600	**3,021.00**

Z1712 ACCUMUTROL

ENGINEERING SPECIFICATION

Shock associated with solenoid or other quick-closing valves serving heavy equipment, such as laundry machines, dishwashers, etc., shall be controlled by installation of Zurn Z1712 Accumutrol. Comes complete with floating stainless steel spherical piston, surge chamber, valve and gauge assembly. Specify size and location.

NOTE:

Maximum temperature 500°F. Maximum pressure 200 PSI residual.

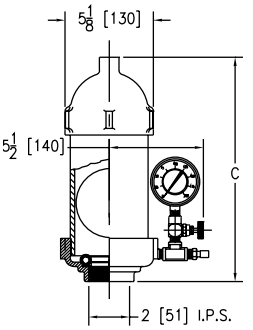

Size	C inches [mm]	Approximate Weight lb [kg]
2000	13 [330]	20 [9]
4000	21 [533]	28 [13]
6000	29 [737]	36 [16]
8000	37 [940]	44 [20]
10000	45 [1143]	52 [24]
12000	53 [1346]	60 [27]
14000	61 [1549]	68 [31]
16000	69 [1753]	76 [34]

PREFIXES	DESCRIPTION	SIZE	LIST PRICE
Z*	Bronze surge chamber, Viton valve seat and stainless steel spherical piston.	2000	**8,305.00**
		4000	**9,618.00**
		6000	**11,028.00**
		8000	**13,426.00**
		10000	**15,484.00**
		12000	**17,547.00**
		14000	**26,235.00**
		16000	**28,961.00**

For additional product information, please visit www.zurn.ca

**Regularly furnished unless otherwise specified.*
Items designated as Best Sellers are most specified and are generally in stock for shipment.

STAINLESS STEEL DRAINS

STAINLESS STEEL DRAINS – APPLICATION INDEX	324
STAINLESS STEEL DRAINS – BUTT-WELD ENGINEERING DATA	324
Z1715 15" [381 MM] DIAMETER ROOF DRAIN	325
Z1717 SCUPPER DRAIN	325
Z1720 4" X 8" [102 MM X 203 MM] OPEN SIGHT DRIP DRAIN	326
Z1721 6" X 12" [152 MM X 305 MM] OPEN SIGHT DRIP DRAIN	326
Z1724 ROUND FUNNEL	327
Z1725 OVAL FUNNEL	327
Z1726 ADJUSTABLE MEDIUM DUTY FLOOR DRAIN WITH ROUND TOP	328
Z1727 ADJUSTABLE MEDIUM DUTY FLOOR DRAIN WITH SQUARE TOP	329
Z1730 9" [229 MM] DIAMETER HEAVY-DUTY SHALLOW TYPE FLOOR DRAIN	330
Z1731 9" [229 MM] DIAMETER HEAVY-DUTY MEDIUM DEPTH FLOOR DRAIN	330
Z1732 9-5/8" [244 MM] DIAMETER HEAVY-DUTY ADJUSTABLE FLOOR DRAIN	331
Z1735 12" [305 MM] DIAMETER HEAVY-DUTY FLOOR DRAIN	331
Z1736 12" [305 MM] DIAMETER EXTRA HEAVY-DUTY FLOOR DRAIN	332
Z1737 15" [381 MM] DIAMETER EXTRA HEAVY-DUTY FLOOR DRAIN	332
Z1739 PIT DRAIN	333
Z1740 BACKWATER VALVE	333
Z1745 FLOOR CLEANOUT WITH O-RING SEAL PLUG	334
Z1749 12" X 12" [305 MM X 305 MM] SANI-FLOR RECEPTOR WITH 4" [102 MM] SUMP DEPTH	335
Z1750 12" X 12" [305 MM X 305 MM] SANI-FLOR RECEPTOR WITH 6" [152 MM] SUMP DEPTH	336
Z1751 12" X 12" [305 MM X 305 MM] SANI-FLOR RECEPTOR WITH 8" [203 MM] SUMP DEPTH	337
Z1752 12" X 12" [305 MM X 305 MM] SANI-FLOR RECEPTOR WITH 10" [254 MM] SUMP DEPTH	338
Z1755 13-3/8" [340 MM] SQUARE SANI-FLOR RECEPTOR 6" [152 MM] SUMP WITH ADJUSTABLE CLAMP FRAME	339
Z1761 24-5/16" [618 MM] SQUARE KETTLE DRAIN WITH 8" [203 MM] SUMP DEPTH	339
Z1762 25" X 15-1/2" [635 MM X 394 MM] KETTLE DRAIN	340
Z1763 37-9/16" X 22-7/8" [954 MM X 581 MM] KETTLE DRAIN	341

STAINLESS STEEL DRAINS – APPLICATION INDEX

Product selection should be made with a specific application and the type of construction in mind. The varied types and sizes of Zurn drainage products, together with their options, offer a drain selection for all applications.

APPLICATION	RECOMMENDED DRAINAGE PRODUCT
Main Roof Drain	Z1715
Wall or Scupper Drain	Z1717
Food Service Floor Drain	Z1749, Z1750, Z1751, Z1752, Z1761, Z1762, Z1763
Indirect Waste Floor Receptor	Z1720, Z1721, Z1750-1, Z1751-1, Z1752-1
Heavy-Duty Floor Drain	Z1730, Z1731, Z1732, Z1735, Z1737
Adjustable Floor Drain	Z1726, Z1727, Z1732
Extra-Heavy-Duty Floor Drain	Z1736, Z1737
Wall of Pitt Drain	Z1739
Backwater Valve	Z1740
Sanitary Floor Cleanout	Z1745
Pool Deck Drain	Z1723

STAINLESS STEEL DRAINS – BUTT-WELD ENGINEERING DATA

Butt-Welding Casting Outlets

The outlet sections of all cast carbon steel or cast stainless steel products as specified from this brochure shall conform to ANSI-B36.10M-85 and ANSI-B36.19M-85 standards for pipe wall thicknesses for Schedule 10, Schedule 40, or Schedule 80 as specified.

Butt-welding ends of the above mentioned sections shall conform to ANSI B16.25-86 standard for plain welding bevel of 37-1/2° + 2-1/2° and root face (land) of 1/16″ + 1/32″.

All outlet requirements must be specified and made known to the manufacturer prior to quotation of prices of products applicable to the project.

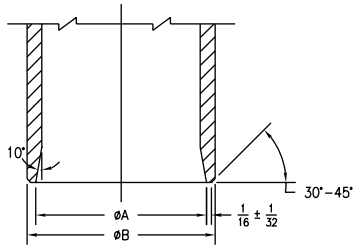

Schedule 10S Pipe

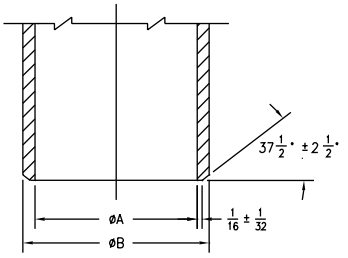

Schedule 40 Pipe

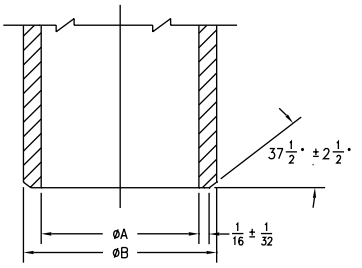

Schedule 80 Pipe

Schedule Pipe	Dimensions in Inches [mm]									
	Pipe Size									
	2 [51]		3 [76]		4 [102]		6 [152]		8 [203]	
	A	B	A	B	A	B	A	B	A	B
10S	2.157	2.375	3.260	3.500	4.260	4.500	6.375	6.625	8.329	8.625
40	2.067	2.375	3.068	3.500	4.026	4.500	6.065	6.625	7.981	8.625
80	1.939	2.375	2.900	3.500	3.826	4.500	5.761	6.625	7.625	8.625

Z1715 15″ [381 MM] DIAMETER ROOF DRAIN

ENGINEERING SPECIFICATION

Zurn Z1715 roof drain features Type 304 (CF8) stainless steel body, galvanized cast iron combination gravel guard/flashing clamp, and dome strainer.

Dimensions in inches [mm] A Pipe Size	Approximate Weight lb [kg]	Dome Open Area sq in [cm²]
Butt-Weld (BW) - Specify Schedule 10 or 40		
3BW, 4BW	52 [24]	103 [665]
6BW	54 [24]	
Threaded (IP)		
3IP, 4IP	52 [24]	103 [665]

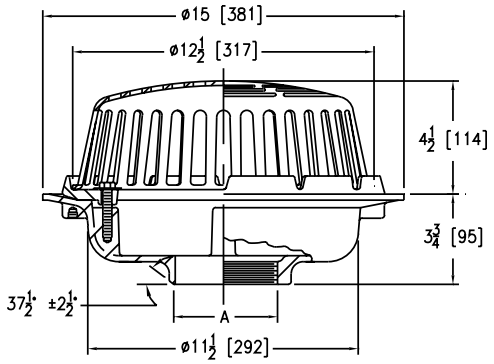

PREFIXES	DESCRIPTION	A PIPE SIZE	LIST PRICE
Z1715*	Type 304 (CF8) Stainless Steel Body	3″, 4″	10,577.00
		6″	11,899.00
ZM1715	Type 316 (CF8M) Stainless Steel Body	3″, 4″	12,438.00
		6″	13,755.00
OUTLETS (SPECIFY PIPE SIZE IN INCHES AND TYPE OF OUTLET)			
OUTLET TYPE		**PIPE SIZE/OUTLET TYPE**	**ADD**
BW	Butt-weld (Specify Schedule 10 or 40)	3BW, 4BW, 6BW	N/C
IP	Threaded	3IP, 4IP	N/C
SUFFIXES			**ADD**
–C	Galvanized Underdeck Clamp		367.00
–DP	Top-Set® Roof Deck Plate (Replaces both the -C and -R)		532.00
–E	Galvanized Extension (Specify height from 1″ to 4″)		1,186.00
–R	Galvanized Steel Sump Receiver		401.00
–VP	Vandal-Proof Secured Top		143.00

Z1717 SCUPPER DRAIN

ENGINEERING SPECIFICATION

Zurn Z1717 scupper drain features Type 304 (CF8) stainless steel body, cast aluminum oblique grate, and clamp collar.

Dimensions in inches [mm] A Pipe Size	D	M	Approximate Weight lb [kg]	Grate Open Area sq in [cm²]
Butt-weld (BW) - Specify Schedule 10 or 40				
3BW	2 [51]	6-1/8 [156]	24 [11]	20 [129]
4BW	2-1/2 [63]	5-5/8 [143]		

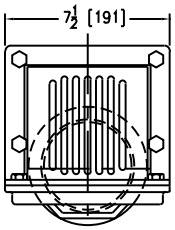

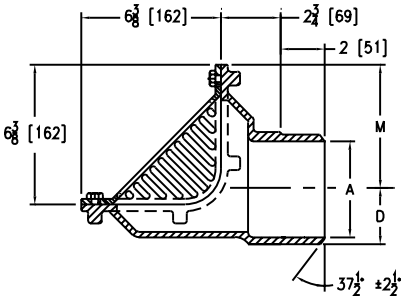

PREFIXES	DESCRIPTION	A PIPE SIZE	LIST PRICE
Z1717*	Type 304 (CF8) Stainless Steel Body	3″, 4″	7,108.00
ZM1717	Type 316 (CF8M) Stainless Steel Body	3″, 4″	8,519.00
OUTLETS (SPECIFY PIPE SIZE IN INCHES AND TYPE OF OUTLET)			
OUTLET TYPE		**PIPE SIZE/OUTLET TYPE**	**ADD**
BW	Butt-weld (Specify Schedule 10 or 40)	3BW, 4BW	N/C
SUFFIXES			**ADD**
–VP	Vandal-Proof Secured Top		241.00

*Regularly furnished unless otherwise specified.

This symbol denotes a product that is engineered to reduce installation and rework time.

For additional product information, please visit www.zurn.ca

Z1720 4″ X 8″ [102 MM X 203 MM] OPEN SIGHT DRIP DRAIN

ENGINEERING SPECIFICATION

Zurn Z1720 4″ x 8″ [102 mm x 203 mm] open sight drip drain features Type 304 (CF8) stainless steel body and integral aluminum bottom dome strainer, all with plain finish.

Dimensions in inches [mm]	Approximate Weight lb [kg]
A Pipe Size	
Butt-Weld (BW) - Specify Schedule 10 or 40	
2BW, 3BW	13 [6]
Threaded (IP)	
2IP, 3IP	13 [6]

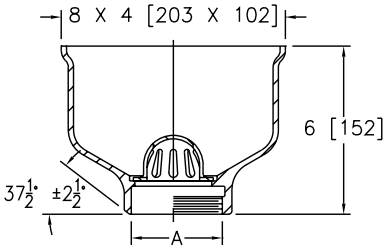

PREFIXES	DESCRIPTION	A PIPE SIZE	LIST PRICE
Z1720*	Type 304 (CF8) Stainless Steel Body	2″, 3″	2,582.00
ZM1720	Type 316 (CF8M) Stainless Steel Body	2″, 3″	2,969.00
OUTLETS (SPECIFY PIPE SIZE IN INCHES AND TYPE OF OUTLET)			
OUTLET	TYPE	PIPE SIZE/OUTLET TYPE	ADD
BW	Butt-weld (Specify Schedule 10 or 40)	2BW, 3BW	N/C
IP	Threaded	2IP, 3IP	N/C
SUFFIXES			ADD
–DB	Stainless Steel Dome Bottom Strainer		1,334.00
–FG	Flush Gate		1,076.00

Z1721 6″ X 12″ [152 MM X 305 MM] OPEN SIGHT DRIP DRAIN

ENGINEERING SPECIFICATION

Zurn Z1721 6″ x 12″ [152 mm x 305 mm] open sight drip drain features Type 304 (CF8) stainless steel body and integral aluminum bottom dome strainer, all with plain finish.

Dimensions in inches [mm]		Approximate Weight lb [kg]
A Pipe Size	E Body Height Dimensions	
Butt-Weld (BW) - Specify Schedule 10 or 40		
3BW, 4BW, 6BW	10 [254]	30 [14]
Threaded (IP)		
3IP, 4IP, 6IP	10 [254]	30 [14]

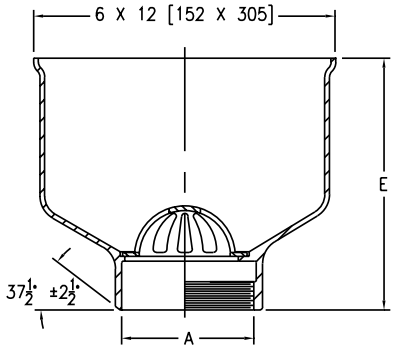

PREFIXES	DESCRIPTION	A PIPE SIZE	LIST PRICE
Z1721*	Type 304 (CF8) Stainless Steel Body	3″, 4″, 6″	9,419.00
ZM1721	Type 316 (CF8M) Stainless Steel Body	3″, 4″, 6″	10,439.00
OUTLETS (SPECIFY PIPE SIZE IN INCHES AND TYPE OF OUTLET)			
OUTLET	TYPE	PIPE SIZE/OUTLET TYPE	E BODY HT. DIM.	ADD
BW	Butt-weld (Specify Schedule 10 or 40)	3BW, 4BW, 6BW	10″	N/C
IP	Threaded	3IP, 4IP, 6IP	10″	N/C
SUFFIXES				ADD
–DB	Stainless Steel Dome Bottom Strainer			1,715.00
–FG	Flush Gate			2,304.00

For additional product information, please visit www.zurn.ca

**Regularly furnished unless otherwise specified.*

This symbol denotes a product that is engineered to reduce installation and rework time.

Z1724 ROUND FUNNEL

ENGINEERING SPECIFICATION

Zurn Z1724 4" [102 mm] or 6" [152 mm] diameter round funnel features Type 304 (CF8) stainless steel with satin finish and securing screws.

Dimensions in inches [mm]			Approximate Weight lb [kg]
A	C	E	
4 [102]	2-1/4 [57]	3-3/4 [95]	3 [1]
6 [152]	2-7/8 [73]	6 [152]	5 [2]

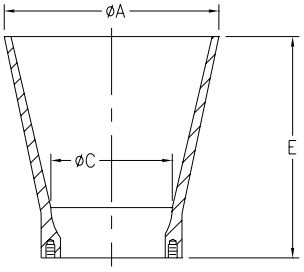

PREFIXES	DESCRIPTION	PRODUCT DESIG.	'A' DIA. SIZE	LIST PRICE
Z1724*	Type 304 (CF8) Stainless Steel Body	-4	4"	1,535.00
		-6	6"	1,892.00
ZM1724	Type 316 (CF8M) Stainless Steel Body	-4	4"	1,689.00
		-6	6"	2,079.00

Z1725 OVAL FUNNEL

ENGINEERING SPECIFICATION

Zurn Z1725 8-7/8" x 3-5/8" [225 mm x 92 mm] oval funnel features Type 304 (CF8) stainless steel with satin finish and securing screws. (For use with 6" [152 mm] top size or larger.)

Dimensions in inches [mm]	Approximate Weight lb [kg]
A Oval Size	
8-7/8 [225] x 3-5/8 [92]	5 [2]

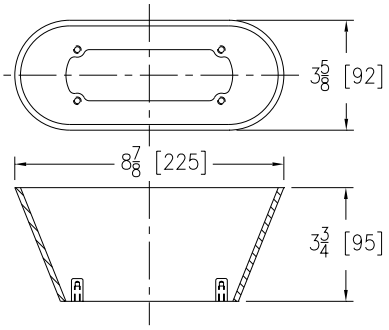

PREFIXES	DESCRIPTION	A PIPE SIZE	LIST PRICE
Z1725*	Type 304 (CF8) Stainless Steel Body	8-7/8" x 3-5/8"	1,890.00
ZM1725	Type 316 (CF8M) Stainless Steel Body	8-7/8" x 3-5/8"	2,115.00

*Regularly furnished unless otherwise specified.

This symbol denotes a product that is engineered to reduce installation and rework time.

For additional product information, please visit www.zurn.ca

Z1726 ADJUSTABLE MEDIUM DUTY FLOOR DRAIN WITH ROUND TOP

ENGINEERING SPECIFICATION

Zurn Z1726 medium-duty adjustable floor drain features all Type 304 (CF8) stainless steel, anchor flange (clamp collar with seepage holes, when specified), and 6" [152 mm] diameter medium-duty vertically adjustable satin finish top.

Dimensions in inches [mm]			Approximate Weight lb [kg]	Grate Open Area sq in [cm²]
A	B	E		
Butt-Weld (BW) - Specify Schedule 10 or 40				
2BW, 3BW	5 [127]	2-7/8 [73]	13 [6]	7 [45]
2BW, 3BW, 4BW	6 [152]		13 [6]	11 [71]
2BW, 3BW, 4BW	7 [178]		14 [6]	15 [97]
3BW, 4BW, 6BW	8 [203]		16 [7]	20 [129]
6BW	10 [254]		19 [9]	27 [174]
Inside Caulk (IC)				
2IC, 3IC	5 [127]	4-3/8 [111]	13 [6]	7 [45]
2IC, 3IC, 4IC	6 [152]		13 [6]	11 [71]
2IC, 3IC, 4IC	7 [178]		14 [6]	15 [97]
3IC, 4IC	8 [203]		16 [7]	20 [129]
Threaded (IP)				
2IP, 3IP	5 [127]	2-7/8 [73]	13 [6]	7 [45]
2IP, 3IP, 4IP	6 [152]		13 [6]	11 [71]
2IP, 3IP, 4IP	7 [178]		14 [6]	15 [97]
3IP, 4IP	8 [203]		16 [7]	20 [129]

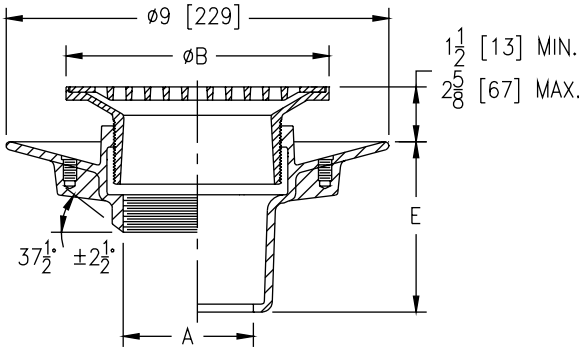

PREFIXES	DESCRIPTION	STRAINER DESIG.	A PIPE SIZE	LIST PRICE
Z1726*	Type 304 (CF8) Stainless Steel Body	–RD5	2", 3"	**6,434.00**
		–RD6	2", 3", 4"	**6,713.00**
		–RD7	2", 3", 4"	**6,968.00**
		–RD8	3", 4", 6"	**7,256.00**
		–RD10	6"	**7,660.00**
ZM1726	Type 316 (CF8M) Stainless Steel Body	–RD5	2", 3"	**POA**
		–RD6	2", 3", 4"	**POA**
		–RD7	2", 3", 4"	**POA**
		–RD8	3", 4", 6"	**POA**
		–RD10	6"	**POA**

OUTLETS (SPECIFY PIPE SIZE IN INCHES AND TYPE OF OUTLET)

OUTLET TYPE		PIPE SIZE/OUTLET TYPE	E BODY HT. DIM.	ADD
BW	Butt-weld (Specify Schedule 10 or 40)	2BW, 3BW, 4BW, 6BW	2-7/8"	**N/C**
IC	Inside Caulk	2IC, 3IC, 4IC	4-3/8"	**N/C**
IP	Threaded	2IP, 3IP, 4IP	2-7/8"	**N/C**

SUFFIXES		ADD
–K	Seepage Holes Only	**420.00**
–KC	Clamp Collar with Seepage Holes	**890.00**
–VP	Vandal-Proof Secured Top	**107.00**
–Y	Stainless Steel Sediment Bucket	**670.00**

For additional product information, please visit www.zurn.ca

**Regularly furnished unless otherwise specified.*

This symbol denotes a product that is engineered to reduce installation and rework time.

Z1727 ADJUSTABLE MEDIUM DUTY FLOOR DRAIN WITH SQUARE TOP

ENGINEERING SPECIFICATION

Zurn Z1727 medium-duty adjustable floor drain features all Type 304 (CF8) stainless steel, anchor flange (clamp collar with seepage holes when specified), and 6" [152 mm] square medium-duty vertically adjustable satin finish top.

Dimensions in inches [mm]			Approximate Weight lb [kg]	Grate Open Area sq in [cm²]
A	B	E		
Butt-Weld (BW) - Specify Schedule 10 or 40				
2BW, 3BW	5 [127]	2-7/8 [73]	13 [6]	9 [58]
2BW, 3BW, 4BW	6 [152]		14 [6]	13 [84]
3BW, 4BW, 6BW	8 [203]		18 [8]	25 [161]
Inside Caulk (IC)				
3IC	5 [127]	4-3/8 [111]	13 [6]	9 [58]
3IC, 4IC	6 [152]		14 [6]	13 [84]
3IC, 4IC	8 [203]		18 [8]	25 [161]
Threaded (IP)				
2IP, 3IP	5 [127]	2-7/8 [73]	13 [6]	9 [58]
2IP, 3IP, 4IP	6 [152]		14 [6]	13 [84]
3IP, 4IP	8 [203]		18 [8]	25 [161]

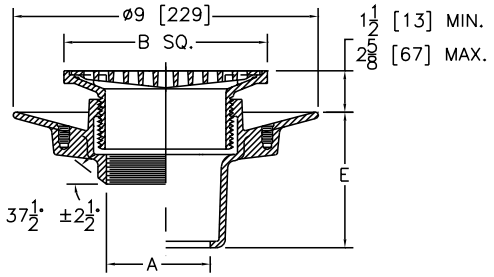

PREFIXES	DESCRIPTION	STRAINER DESIG.	A PIPE SIZE	LIST PRICE
Z1727*	Type 304 (CF8) Stainless Steel Body and Top Assembly	–SQ5	2", 3"	**6,661.00**
		–SQ6	2", 3", 4"	**6,948.00**
		–SQ8	3", 4", 6"	**7,512.00**
ZM1727	Type 316 (CF8M) Stainless Steel Body and Top Assembly	–SQ5	2", 3"	**POA**
		–SQ6	2", 3", 4"	**POA**
		–SQ8	3", 4", 6"	**POA**

OUTLETS (SPECIFY PIPE SIZE IN INCHES AND TYPE OF OUTLET)				
OUTLET TYPE		PIPE SIZE/OUTLET TYPE	E BODY HT. DIM.	ADD
BW	Butt-weld (Specify Schedule 10 or 40)	2BW, 3BW, 4BW, 6BW	2-7/8"	**N/C**
IC	Inside Caulk	3IC, 4IC	4-3/8"	**N/C**
IP	Threaded	2IP, 3IP, 4IP	2-7/8"	**N/C**

SUFFIXES		ADD
–K	Seepage Holes Only	**420.00**
–KC	Clamp Collar with Seepage Holes	**890.00**
–VP	Vandal-Proof Secured Top	**107.00**
–Y	Stainless Steel Sediment Bucket	**670.00**

**Regularly furnished unless otherwise specified.*

This symbol denotes a product that is engineered to reduce installation and rework time.

For additional product information, please visit www.zurn.ca

Z1730 9″ [229 MM] DIAMETER HEAVY-DUTY SHALLOW TYPE FLOOR DRAIN

ENGINEERING SPECIFICATION

Zurn Z1730 9″ [229 mm] diameter shallow type, heavy-duty floor drain features all Type 304 (CF8) stainless steel, integral anchor flange, and non-tilt grate with plain finish.

Dimensions in inches [mm]		Approximate Weight lb [kg]	Grate Open Area sq in [cm²]
A	E		
Butt-Weld (BW) - Specify Schedule 10 or 40			
2BW, 3BW, 4BW	4-13/16 [122]	20 [9]	21 [135]
Threaded (IP)			
2IP, 3IP, 4IP	4-13/16 [122]	20 [9]	21 [135]
No-Hub (NH)			
2NH, 3NH, 4NH	4-13/16 [122]	20 [9]	21 [135]

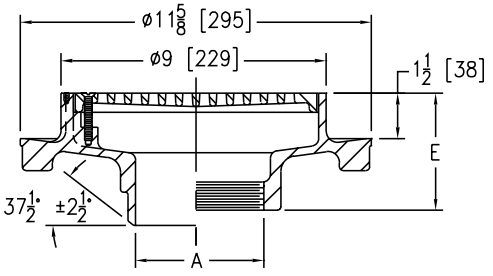

PREFIXES	DESCRIPTION	A PIPE SIZE	LIST PRICE
Z1730*	Type 304 (CF8) Stainless Steel Body	2″, 3″, 4″	6,268.00
ZM1730	Type 316 (CF8M) Stainless Steel Body	2″, 3″, 4″	8,846.00

OUTLETS (SPECIFY PIPE SIZE IN INCHES AND TYPE OF OUTLET)				
OUTLET TYPE		PIPE SIZE/OUTLET TYPE	E BODY HT. DIM.	ADD
BW	Butt-weld (Specify Schedule 10 or 40)	2BW, 3BW, 4BW	4-13/16″	N/C
IP	Threaded	2IP, 3IP, 4IP	4-13/16″	N/C
NH	No-Hub	2NH, 3NH, 4NH	4-13/16″	N/C
SUFFIXES				ADD
–K	Seepage Holes Only			420.00
–KC	Clamp Collar with Seepage Holes			890.00
–TS	Top Secured with Slotted Screws			159.00
–VP	Vandal-Proof Secured Top			183.00

Z1731 9″ [229 MM] DIAMETER HEAVY-DUTY MEDIUM DEPTH FLOOR DRAIN

ENGINEERING SPECIFICATION

Zurn Z1731 9″ [229 mm] diameter heavy-duty floor drain features all Type 304 (CF8) stainless steel, anchor flange, and loose set grate with plain finish.

Dimensions in inches [mm]		Approximate Weight lb [kg]	Grate Open Area sq in [cm²]
A	E		
Butt-Weld (BW) - Specify Schedule 10 or 40			
3BW, 4BW	5-11/16 [144]	22 [10]	21 [135]
Inside Caulk (IC)			
3IC, 4IC	5-11/16 [144]	22 [10]	21 [135]
Threaded (IP)			
3IP, 4IP	5-11/16 [144]	22 [10]	21 [135]
No-Hub (NH)			
3NH, 4NH	5-11/16 [144]	22 [10]	21 [135]

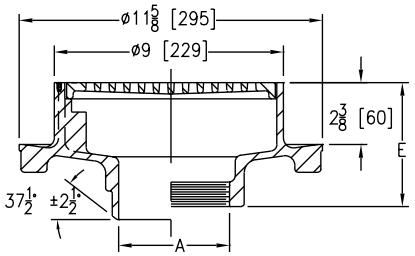

PREFIXES	DESCRIPTION	A PIPE SIZE	LIST PRICE
Z1731*	Type 304 (CF8) Stainless Steel Body	3″, 4″	8,039.00
ZM1731	Type 316 (CF8M) Stainless Steel Body	3″, 4″	8,674.00

OUTLETS (SPECIFY PIPE SIZE IN INCHES AND TYPE OF OUTLET)				
OUTLET TYPE		PIPE SIZE/OUTLET TYPE	E BODY HT. DIM.	ADD
BW	Butt-weld (Specify Schedule 10 or 40)	3BW, 4BW	5-11/16″	N/C
IC	Inside Caulk	3IC, 4IC	5-11/16″	N/C
IP	Threaded	3IP, 4IP	5-11/16″	N/C
NH	No-Hub	3NH, 4NH	5-11/16″	N/C
SUFFIXES				ADD
–K	Seepage Holes Only			420.00
–KC	Clamp Collar with Seepage Holes			890.00
–TS	Top Secured with Slotted Screws			159.00
–VP	Vandal-Proof Secured Top			183.00
–Y	Sediment Bucket			1,657.00

For additional product information, please visit www.zurn.ca

**Regularly furnished unless otherwise specified.*

This symbol denotes a product that is engineered to reduce installation and rework time.

Z1732 9-5/8" [244 MM] DIAMETER HEAVY-DUTY ADJUSTABLE FLOOR DRAIN

ENGINEERING SPECIFICATION

Zurn Z1732 9-5/8" [244 mm] heavy-duty adjustable floor drain features all Type 304 (CF8) stainless steel, integral anchor flange, adjustable top frame, and deep flange grate with plain finish.

Dimensions in inches [mm]		Approximate Weight lb [kg]	Grate Open Area sq in [cm²]
A	E		
Threaded (IP)			
2IP, 3IP, 4IP	6 [152]	40 [18]	14 [90]
6IP	6-3/8 [162]		
No-Hub (NH)			
2NH, 3NH, 4NH	6 [152]	40 [18]	14 [90]
6NH	6-3/8 [162]		

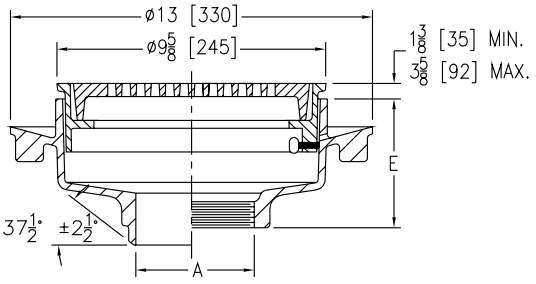

PREFIXES	DESCRIPTION	A PIPE SIZE	LIST PRICE
Z1732*	Type 304 (CF8) Stainless Steel Body	2", 3", 4", 6"	9,891.00
ZM1732	Type 316 (CF8M) Stainless Steel Body	2", 3", 4", 6"	10,910.00

OUTLETS (SPECIFY PIPE SIZE IN INCHES AND TYPE OF OUTLET)

OUTLET	TYPE	PIPE SIZE/OUTLET TYPE	E BODY HT. DIM.	ADD
IP	Threaded	2IP, 3IP, 4IP	6"	N/C
		6IP	6-3/8"	N/C
NH	No-Hub	2NH, 3NH, 4NH	6"	N/C
		6NH	6-3/8"	N/C

SUFFIXES		ADD
–K	Seepage Holes Only	420.00
–KC	Clamp Collar with Seepage Holes	890.00
–SC	Solid Secured Cover	2,203.00
–VP	Vandal-Proof Secured Top	541.00
–Y	Sediment Bucket	1,657.00
–30	Bronze Closure Plug	1,330.00
–33	Type 304 (CF8) Stainless Steel Closure Plug	3,058.00

Z1735 12" [305 MM] DIAMETER HEAVY-DUTY FLOOR DRAIN

ENGINEERING SPECIFICATION

Zurn Z1735 12" [305 mm] diameter heavy-duty floor drain features all Type 304 (CF8) stainless steel body with integral anchor flange and non-tilt grate with plain finish.

Dimensions in inches [mm]		Approximate Weight lb [kg]	Grate Open Area sq in [cm²]
A	E		
Butt-Weld (BW) - Specify Schedule 10 or 40			
3BW, 4BW	6 [152]	50 [23]	33 [213]
6BW		54 [24]	
Threaded (IP)			
3IP, 4IP	5-1/4 [133]	50 [23]	33 [213]
6IP		54 [24]	

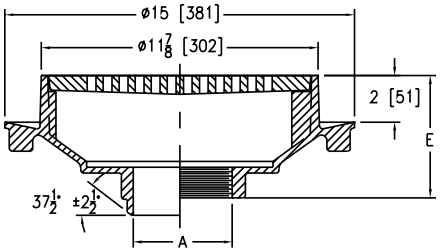

PREFIXES	DESCRIPTION	A PIPE SIZE	LIST PRICE
Z1735*	Type 304 (CF8) Stainless Steel Body	3", 4"	14,237.00
		6"	16,135.00
ZM1735	Type 316 (CF8M) Stainless Steel Body	3", 4"	15,664.00
		6"	17,849.00

OUTLETS (SPECIFY PIPE SIZE IN INCHES AND TYPE OF OUTLET)

OUTLET	TYPE	PIPE SIZE/OUTLET TYPE	E BODY HT. DIM.	ADD
BW	Butt-weld (Specify Schedule 10 or 40)	3BW, 4BW, 6BW	6"	N/C
IP	Threaded	3IP, 4IP, 6IP	5-1/4"	N/C

SUFFIXES		ADD
–K	Seepage Holes Only	420.00
–KC	Clamp Collar with Seepage Holes	1,144.00
–TS	Top Secured with Slotted Screws	204.00
–VP	Vandal-Proof Secured Top	242.00
–30	Bronze Closure Plug	1,330.00
–33	Type 304 (CF8) Stainless Steel Closure Plug	3,058.00

**Regularly furnished unless otherwise specified.*

This symbol denotes a product that is engineered to reduce installation and rework time.

For additional product information, please visit www.zurn.ca

Z1736 12″ [305 MM] DIAMETER EXTRA HEAVY-DUTY FLOOR DRAIN

ENGINEERING SPECIFICATION

Zurn Z1736 12″ [305 mm] diameter extra heavy-duty floor drain features all Type 304 (CF8) stainless steel body with integral anchor flange and deep flange grate with plain finish.

Dimensions in inches [mm]		Approximate Weight lb [kg]	Grate Open Area sq in [cm²]
A	E		
Butt-Weld (BW) - Specify Schedule 10 or 40			
3BW, 4BW, 6BW	6 [152]	61 [28]	34 [219]
Threaded (IP)			
3IP, 4IP, 6IP	6-7/16 [164]	61 [28]	34 [219]

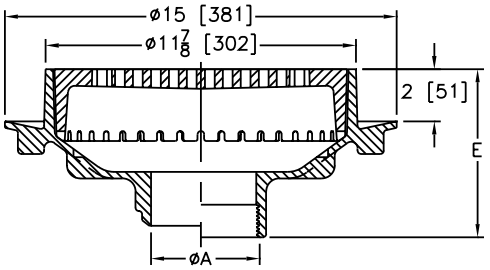

PREFIXES	DESCRIPTION		A PIPE SIZE	LIST PRICE
Z1736*	Type 304 (CF8) Stainless Steel Body		3″, 4″, 6″	15,659.00
ZM1736	Type 316 (CF8M) Stainless Steel Body		3″, 4″, 6″	17,231.00
OUTLETS (SPECIFY PIPE SIZE IN INCHES AND TYPE OF OUTLET)				
OUTLET TYPE		PIPE SIZE/OUTLET TYPE	E BODY HT. DIM.	ADD
BW	Butt-weld (Specify Schedule 10 or 40)	3BW, 4BW, 6BW	6″	N/C
IP	Threaded	3IP, 4IP, 6IP	6-7/16″	N/C
SUFFIXES				ADD
–K	Seepage Holes Only			420.00
–KC	Clamp Collar with Seepage Holes			1,144.00
–TS	Top Secured with Slotted Screws			204.00
–VP	Vandal-Proof Secured Top			1,461.00
–Y	Sediment Bucket			475.00
–30	Bronze Closure Plug			1,461.00
–33	Type 304 Stainless Steel Closure Plug			3,058.00

Z1737 15″ [381 MM] DIAMETER EXTRA HEAVY-DUTY FLOOR DRAIN

ENGINEERING SPECIFICATION

Zurn Z1737 15″ [381 mm] diameter extra heavy-duty floor drain features all Type 304 (CF8) stainless steel body, integral anchor flange, and non-tilt grate with plain finish.

Dimensions in inches [mm]		Approximate Weight lb [kg]	Grate Open Area sq in [cm²]
A	E		
Threaded (IP)			
8IP	5-1/2 [140]	85 [39]	55 [355]

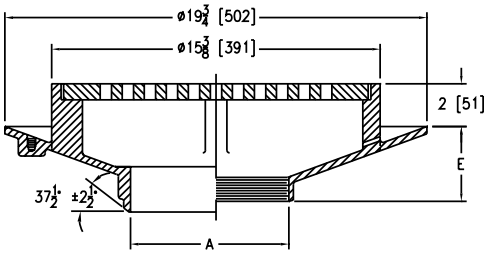

PREFIXES	DESCRIPTION		A PIPE SIZE	LIST PRICE
Z1737*	Type 304 (CF8) Stainless Steel Body		8″	29,868.00
ZM1737	Type 316 (CF8M) Stainless Steel Body		8″	35,934.00
OUTLETS (SPECIFY PIPE SIZE IN INCHES AND TYPE OF OUTLET)				
OUTLET TYPE		PIPE SIZE/OUTLET TYPE	E BODY HT. DIM.	ADD
IP	Threaded	8IP	5-1/2″	N/C
SUFFIXES				ADD
–K	Seepage Holes Only			420.00
–KC	Clamp Collar with Seepage Holes			766.00
–TS	Top Secured with Slotted Screws			159.00
–VP	Vandal-Proof Secured Top			176.00

For additional product information, please visit www.zurn.ca

**Regularly furnished unless otherwise specified.*

This symbol denotes a product that is engineered to reduce installation and rework time.

Z1739 PIT DRAIN

ENGINEERING SPECIFICATION

Zurn Z1739 pit drain features all Type 304 (CF8) stainless steel body with integral anchor flange, grate with plain finish, and bronze backwater valve.

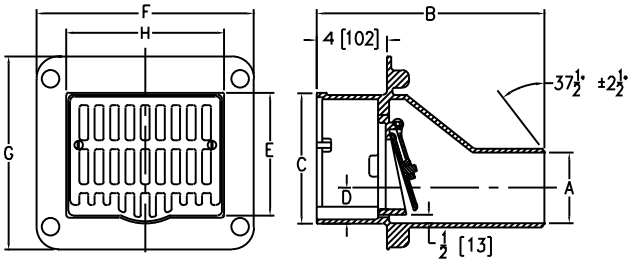

PREFIXES	DESCRIPTION	A PIPE SIZE	LIST PRICE
Z1739*	Type 304 (CF8) Stainless Steel Body	3″	16,867.00
		4″	23,641.00
ZM1739	Type 316 (CF8M) Stainless Steel Body	3″	20,245.00
		4″	27,824.00
OUTLETS (SPECIFY PIPE SIZE IN INCHES AND TYPE OF OUTLET)			
OUTLET TYPE		**PIPE SIZE/OUTLET TYPE**	**ADD**
BW	Butt-weld (Specify Schedule 10 or 40)	3BW, 4BW	N/C
SUFFIXES			**ADD**
–VP	Vandal-Proof Secured Top		176.00

Dimensions in inches [mm]								Approximate Weight lb [kg]	Grate Open Area sq in [cm²]
A	B	C	D	E	F	G	H		
Butt-Weld (BW) - Specify Schedule 10 or 40									
3BW	13 [330]	7-5/8 [194]	1-1/2 [38]	6-7/8 [175]	12-3/4 [324]	11 [279]	9-1/4 [235]	50 [23]	20 [129]
4BW			2 [51]						

Z1740 BACKWATER VALVE

ENGINEERING SPECIFICATION

Zurn Z1740 backwater valve features Type 304 (CF8) stainless steel body with bronze backwater valve and bronze threaded cover.

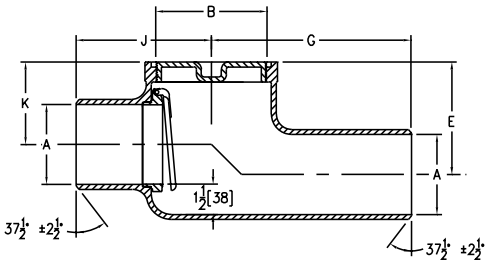

PREFIXES	DESCRIPTION	A PIPE SIZE	LIST PRICE
Z1740*	Type 304 (CF8) Stainless Steel Body	4″	13,093.00
ZM1740	Type 316 (CF8M) Stainless Steel Body	4″	15,844.00
OUTLETS (SPECIFY PIPE SIZE IN INCHES AND TYPE OF OUTLET)			
OUTLET TYPE		**PIPE SIZE/ OUTLET TYPE**	**ADD**
BW	Butt-weld (Specify Schedule 10 or 40)	4BW	N/C
SUFFIXES			**ADD**
–SP	Stainless Steel Threaded Cover		3,971.00
–SV	Stainless Steel Backwater Valve		4,900.00

Dimensions in inches [mm]						Approximate Weight lb [kg]
A	B	E	G	J	K	
Butt-Weld (BW) - Specify Schedule 10 or 40						
4BW	5 [127]	5-5/8 [143]	8-1/2 [216]	6-3/4 [171]	4-1/8 [105]	40 [18]

**Regularly furnished unless otherwise specified.*

This symbol denotes a product that is engineered to reduce installation and rework time.

For additional product information, please visit www.zurn.ca

Z1745 FLOOR CLEANOUT WITH O-RING SEAL PLUG

ENGINEERING SPECIFICATION

Zurn Z1745 floor cleanout features all Type 304 (CF8) stainless steel body and plug with O-ring seal. Plug is scoriated with satin finish. Spanner wrench provided for each plug size.

Dimensions in inches [mm]				Approximate Weight lb [kg]
A	B	C	E	
Butt-Weld (BW) - Specify Schedule 10 or 40				
2BW	2-3/4 [70]	4 [102]	1-5/8 [41]	6 [3]
3BW	3-1/2 [89]	4-7/8 [124]		
4BW	4-1/2 [114]	6 [152]		
6BW	7-7/8 [200]	9-3/8 [238]		10 [5]
8BW	9-7/8 [251]	11 [279]	2-1/2 [64]	
Inside Caulk (IC)				
2IC	2-3/4 [70]	4 [102]	3-3/8 [86]	6 [3]
3IC	3-1/2 [89]	4-7/8 [124]		
4IC	4-1/2 [114]	6 [152]		
6IC	7-7/8 [200]	9-3/8 [238]		10 [5]

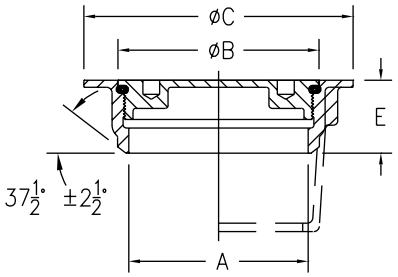

PREFIXES	DESCRIPTION	A PIPE SIZE	LIST PRICE
Z1745*	Type 304 (CF8) Stainless Steel Body	2″, 3″, 4″	**4,285.00**
		6″, 8″	**4,870.00**
ZM1745	Type 316 (CF8M) Stainless Steel Body	2″, 3″, 4″	**4,860.00**
		6″, 8″	**5,511.00**

OUTLETS (SPECIFY PIPE SIZE IN INCHES AND TYPE OF OUTLET)

OUTLET TYPE		PIPE SIZE/OUTLET TYPE	E BODY HT. DIM.	ADD
BW	Butt-weld (Specify Schedule 10 or 40)	2BW, 3BW, 4BW, 6BW	1-5/8″	**N/C**
		8BW	2-1/2″	**N/C**
IC	Inside Caulk	2IC, 3IC, 4IC, 6IC	3-3/8″	**N/C**

SUFFIXES		ADD
–SW	Bronze Spanner Wrench	**183.00**

For additional product information, please visit www.zurn.ca

**Regularly furnished unless otherwise specified.*

This symbol denotes a product that is engineered to reduce installation and rework time.

Z1749 12" X 12" [305 MM X 305 MM] SANI-FLOR RECEPTOR WITH 4" [102 MM] SUMP DEPTH

ENGINEERING SPECIFICATION

Zurn Z1749 12" x 12" x 4" [305 mm x 305 mm x 102 mm] light-duty Sani-Flor receptor features deep, 16 gage, all Type 304 (CF8) stainless steel, non-tilt, loose set, full grate with 1/2" [13 mm] square openings, and anti-splash stainless steel interior dome strainer.

Dimensions in inches [mm]		Approximate Weight lb [kg]	Grate Open Area sq in [cm²]
A	E		
No-Hub (NH)			
2NH, 3NH, 4NH	6-1/16 [154]	15 [7]	23 [148]
Neo-Loc (NL)			
2NL, 3NL, 4NL	5-13/16 [148]	15 [7]	23 [148]

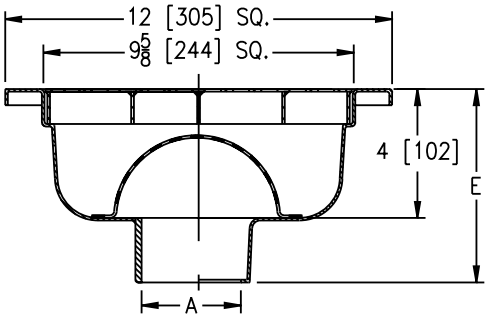

PREFIXES	DESCRIPTION	A PIPE SIZE	LIST PRICE
Z1749*	Type 304 (CF8) Stainless Steel Body	2", 3", 4"	3,640.00
ZM1749	Type 316 (CF8M) Stainless Steel Body	2", 3", 4"	POA

OUTLETS (SPECIFY PIPE SIZE IN INCHES AND TYPE OF OUTLET)				
OUTLET TYPE		PIPE SIZE/OUTLET TYPE	E BODY HT. DIM.	ADD
NH	No-Hub	2NH, 3NH, 4NH	6-1/16"	N/C
NL	Neo-Loc	2NL, 3NL, 4NL	5-13/16"	N/C

SUFFIXES		ADD
–DX	Dex-O-Tex Flange	1,918.00
–HD	Extra-Heavy-Duty Top Frame and Grate	2,248.00
–HP	Heel-Proof Grate	541.00
–K	Anchor Flange (May not be used with –P)	664.00
–KC	Anchor Flange with Seepage Holes and Clamp Collar (May not be used with –P)	1,248.00
–P	1/2" Trap Primer Connection (May not be used with –K or –KC)	297.00
–SG	Solid Gasketed Cover	POA
◷ –TC	Neo-Loc Test Cap Gasket (2" thru 4" NL Bottom Outlet Only)	88.00
–VP	Vandal-Proof Secured Top	775.00
–Y	Sediment Bucket	503.00
–YS	Suspended Sediment Bucket	750.00
–2	1/2 Grate	N/C
–3	3/4 Grate	N/C
–4	Full Grate with 3" Square Opening	217.00
–5	Grate with 4" Dia. X 3-3/4" High Funnel	1,474.00
–8	Grate with 8-3/8" x 3-5/8 x 3-3/4" High Oval Funnel	1,831.00
–15	Solid Cover	281.00
–16	1/2 Solid Cover	281.00
–19	Full Hinged Grate	POA
–20	Full Hinged Cover	POA
		DEDUCT
–1	Less Grate	-491.00

*Regularly furnished unless otherwise specified.

◷ *This symbol denotes a product that is engineered to reduce installation and rework time.*

For additional product information, please visit www.zurn.ca

Z1750 12″ X 12″ [305 MM X 305 MM] SANI-FLOR RECEPTOR WITH 6″ [152 MM] SUMP DEPTH

ENGINEERING SPECIFICATION

Zurn Z1750 12″ x 12″ x 6″ [305 mm x 305 mm x 152 mm] deep light-duty Sani-Flor receptor features 16 gage, all Type 304 (CF8) stainless steel, non-tilt, loose set, full grate with 1/2″ [13 mm] square openings, and anti-splash stainless steel interior dome strainer.

Dimensions in inches [mm]		Approximate Weight lb [kg]	Grate Open Area sq in [cm²]
A	E		
Inside Caulk (IC)			
3IC, 4IC	8-9/16 [217]	15 [7]	23 [148]
No-Hub (NH)			
2NH, 3NH, 4NH	8-1/16 [205]	15 [7]	23 [148]
6NH		17 [8]	23 [148]
Neo-Loc (NL)			
3NL, 4NL	7-13/16 [198]	15 [7]	23 [148]

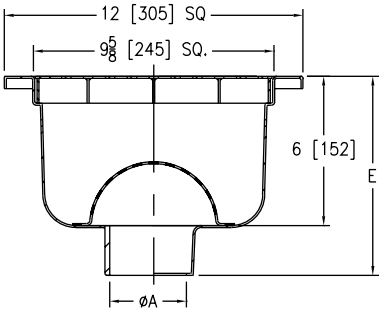

PREFIXES	DESCRIPTION	A PIPE SIZE	LIST PRICE
Z1750*	Type 304 (CF8) Stainless Steel Body	2″, 3″, 4″	4,536.00
		6″	5,283.00
ZM1750	Type 316 (CF8M) Stainless Steel Body	2″, 3″, 4″	POA
		6″	POA

OUTLETS (SPECIFY PIPE SIZE IN INCHES AND TYPE OF OUTLET)

OUTLET TYPE		PIPE SIZE/OUTLET TYPE	E BODY HT. DIM.	ADD
IC	Inside Caulk	3IC, 4IC	8-9/16″	N/C
NH	No-Hub	2NH, 3NH, 4NH, 6NH	8-1/16″	N/C
NL	Neo-Loc	3NL, 4NL	7-13/16″	N/C

SUFFIXES		ADD
–DX	Dex-O-Tex Flange	1,918.00
–HD	Extra-Heavy-Duty Grate	2,248.00
–HP	Heel-Proof Grate	541.00
–K	Anchor Flange	664.00
–KC	Anchor Flange with Seepage Holes and Clamp Collar	1,248.00
–P	1/2″ Trap Primer Connection	297.00
–SG	Solid Gasketed Cover	POA
◷ –TC	Neo-Loc Test Cap Gasket (3″, 4″ NL Bottom Outlet Only)	88.00
–VP	Vandal-Proof Secured Top	775.00
–Y	Sediment Bucket	503.00
–YS	Suspended Sediment Bucket	750.00
–2	1/2 Grate	N/C
–3	3/4 Grate	N/C
–4	Full Grate with 3″ Square Opening	217.00
–5	Grate with 4″ Dia. X 3-3/4″ High Funnel	1,474.00
–8	Grate with 8-3/8″ x 3-5/8 x 3-3/4″ High Oval Funnel	1,831.00
–15	Solid Cover	281.00
–16	1/2 Solid Cover	281.00
–19	Full Hinged Grate	POA
–20	Full Hinged Solid Cover	POA
		DEDUCT
–1	Less Grate	-491.00

For additional product information, please visit www.zurn.ca

**Regularly furnished unless otherwise specified.*

◷ *This symbol denotes a product that is engineered to reduce installation and rework time.*

Z1751 12″ X 12″ [305 MM X 305 MM] SANI-FLOR RECEPTOR WITH 8″ [203 MM] SUMP DEPTH

ENGINEERING SPECIFICATION

Zurn Z1751 12″ x 12″ x 8″ [305 mm x 305 mm x 203 mm] deep light-duty Sani-Flor receptor features 16 gage, all Type 304 (CF8) stainless steel, non-tilt, loose set, full grate with 1/2″ [13 mm] square openings, and anti-splash stainless steel interior dome strainer.

Dimensions in inches [mm]		Approximate Weight lb [kg]	Grate Open Area sq in [cm²]
A	E		
Inside Caulk (IC)			
3IC, 4IC	10-9/16 [268]	19 [9]	23 [148]
No-Hub (NH)			
2NH, 3NH, 4NH	10-1/16 [256]	19 [9]	23 [148]
6NH		21 [10]	23 [148]
Neo-Loc (NL)			
2NL, 3NL, 4NL	9-13/16 [249]	19 [9]	23 [148]

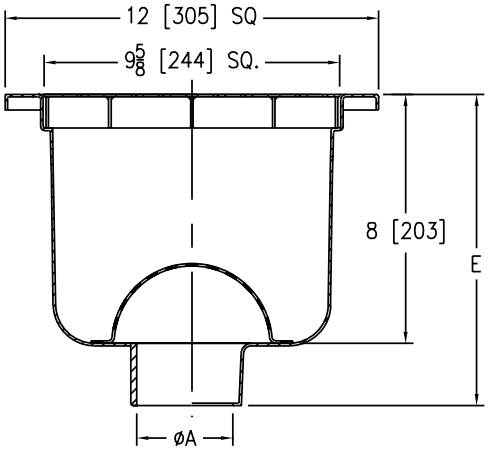

PREFIXES	DESCRIPTION	A PIPE SIZE	LIST PRICE
Z1751*	Type 304 (CF8) Stainless Steel Body	2″, 3″, 4″	4,748.00
		6″	5,489.00
ZM1751	Type 316 (CF8M) Stainless Steel Body	2″, 3″, 4″	POA
		6″	POA

OUTLETS (SPECIFY PIPE SIZE IN INCHES AND TYPE OF OUTLET)				
OUTLET TYPE		PIPE SIZE/OUTLET TYPE	E BODY HT. DIM.	ADD
IC	Inside Caulk	3IC, 4IC	10-9/16″	N/C
NH	No-Hub	2NH, 3NH, 4NH, 6NH	10-1/16″	N/C
NL	Neo-Loc	2NL, 3NL, 4NL	9-13/16″	N/C

SUFFIXES		ADD
–DX	Dex-O-Tex Flange	1,918.00
–HD	Extra-Heavy-Duty Grate	2,248.00
–HP	Heel-Proof Grate	541.00
–K	Anchor Flange	664.00
–KC	Anchor Flange with Seepage Holes and Clamp Collar	1,248.00
–P	1/2″ Trap Primer Connection	297.00
–SG	Solid Gasketed Cover	POA
◷ –TC	Neo-Loc Test Cap Gasket (2″, 3″, 4″ NL Bottom Outlet Only)	88.00
–VP	Vandal-Proof Secured Top	775.00
–Y	Sediment Bucket	503.00
–YS	Suspended Sediment Bucket	750.00
–2	1/2 Grate	N/C
–3	3/4 Grate	N/C
–4	Full Grate with 3″ Square Opening	217.00
–5	Grate with 4″ Dia. X 3-3/4″ High Funnel	1,474.00
–8	Grate with 8-3/8″ x 3-5/8 x 3-3/4″ High Oval Funnel	1,831.00
–15	Solid Cover	281.00
–16	1/2 Solid Cover	281.00
–19	Full Hinged Grate	POA
–20	Full Hinged Solid Cover	POA
		DEDUCT
–1	Less Grate	-491.00

*Regularly furnished unless otherwise specified.

◷ *This symbol denotes a product that is engineered to reduce installation and rework time.*

For additional product information, please visit www.zurn.ca

Z1752 12″ X 12″ [305 MM X 305 MM] SANI-FLOR RECEPTOR WITH 10″ [254 MM] SUMP DEPTH

ENGINEERING SPECIFICATION

Zurn Z1752 12″ x 12″ x 10″ [305 mm x 305 mm x 254 mm] deep light-duty Sani-Flor receptor features 16 gage, all Type 304 (CF8) stainless steel, non-tilt, loose set, full grate with 1/2″ [13 mm] square openings, and anti-splash stainless steel interior dome strainer.

Dimensions in inches [mm]		Approximate Weight lb [kg]	Grate Open Area sq in [cm²]
A	E		
No-Hub (NH)			
2NH, 3NH, 4NH	12-1/16 [306]	22 [10]	23 [148]
6NH		23 [10]	23 [148]
Neo-Loc (NL)			
2NL, 3NL, 4NL	11-13/16 [300]	22 [10]	23 [148]

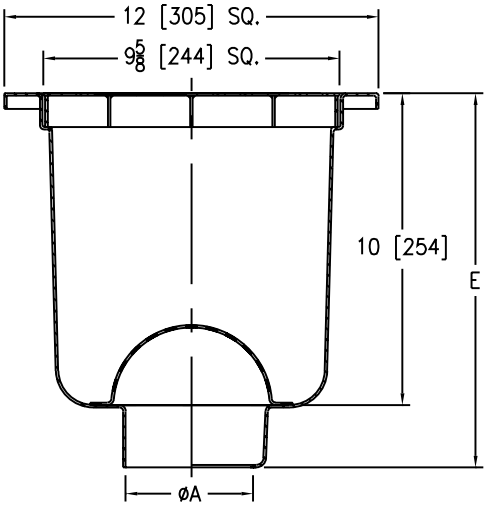

PREFIXES	DESCRIPTION	A PIPE SIZE	LIST PRICE
Z1752*	Type 304 (CF8) Stainless Steel Body	2″, 3″, 4″	5,142.00
		6″	6,023.00
ZM1752	Type 316 (CF8M) Stainless Steel Body	2″, 3″, 4″	POA
		6″	POA

OUTLETS (SPECIFY PIPE SIZE IN INCHES AND TYPE OF OUTLET)				
OUTLET	TYPE	PIPE SIZE/OUTLET TYPE	E BODY HT. DIM.	ADD
NH	No-Hub	2NH, 3NH, 4NH, 6NH	12-1/16″	N/C
NL	Neo-Loc	2NL, 3NL, 4NL	11-13/16″	N/C

SUFFIXES		ADD
–DX	Dex-O-Tex Flange	1,918.00
–HD	Extra-Heavy-Duty Grate	2,248.00
–HP	Heel-Proof Grate	541.00
–K	Anchor Flange	664.00
–KC	Anchor Flange with Seepage Holes and Clamp Collar	1,248.00
–P	1/2″ Trap Primer Connection	297.00
–SG	Solid Gasketed Cover	POA
◷ –TC	Neo-Loc Test Cap Gasket (2″, 3″, 4″ NL Bottom Outlet Only)	88.00
–VP	Vandal-Proof Secured Top	775.00
–Y	Sediment Bucket	503.00
–YS	Suspended Sediment Bucket	750.00
–2	1/2 Grate	N/C
–3	3/4 Grate	N/C
–4	Full Grate with 3″ Square Opening	217.00
–5	Grate with 4″ Dia. X 3-3/4″ High Funnel	1,474.00
–8	Grate with 8-3/8″ x 3-5/8 x 3-3/4″ High Oval Funnel	1,831.00
–15	Solid Cover	281.00
–16	1/2 Solid Cover	281.00
–19	Full Hinged Grate	POA
–20	Full Hinged Solid Cover	POA
		DEDUCT
–1	Less Grate	-491.00

For additional product information, please visit www.zurn.ca

**Regularly furnished unless otherwise specified.*

◷ *This symbol denotes a product that is engineered to reduce installation and rework time.*

Z1755 13-3/8″ [340 MM] SQUARE SANI-FLOR RECEPTOR 6″ [152 MM] SUMP WITH ADJUSTABLE CLAMP FRAME

Patented

ENGINEERING SPECIFICATION

Zurn Z1755 13-3/8″ [340 mm] square x 6″ [152 mm] deep light-duty Sani-Flor receptor features 16 gage, all Type 304 (CF8) fabricated stainless steel, integral flooring clamp frame, and non-tilt loose set, full grate with interior dome strainer for unlevel floor installations.

Dimensions in inches [mm]		Approximate Weight lb [kg]	Grate Open Area sq in [cm²]
A	E		
No-Hub (NH)			
2NH, 3NH, 4NH	8 [203]	10 [5]	25 [161]

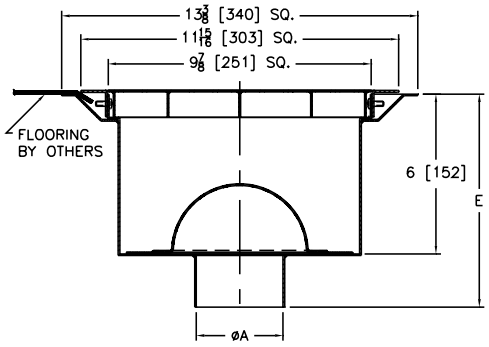

PREFIXES	DESCRIPTION	A PIPE SIZE	LIST PRICE
Z1755*	Type 304 (CF8) Stainless Steel Body	2″, 3″, 4″	15,452.00
ZM1755	Type 316 (CF8M) Stainless Steel Body	2″, 3″, 4″	POA
OUTLETS (SPECIFY PIPE SIZE IN INCHES AND TYPE OF OUTLET)			
OUTLET TYPE		PIPE SIZE/OUTLET TYPE	E BODY HT. DIM. / ADD
NH	No-Hub	2NH, 3NH, 4NH	8″ / N/C
SUFFIXES			ADD
–P	1/2″ Trap Primer Connection		297.00
–2	1/2 Grate		N/C
–3	3/4 Grate		N/C

Z1761 24-5/16″ [618 MM] SQUARE KETTLE DRAIN WITH 8″ [203 MM] SUMP DEPTH

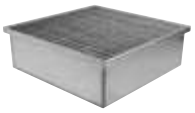

ENGINEERING SPECIFICATION

Zurn ZS1761 24-5/16″ x 24-5/16″ x 8″ [618 mm x 618 mm x 203 mm] deep light-duty square kettle drain features 14 gage, all Type 304 (CF8) stainless steel, and loose set full grate.

Dimensions in inches [mm]	Approximate Weight lb [kg]	Grate Open Area sq in [cm²]
A Pipe Size		
No-Hub (NH)		
4NH, 6NH, 8NH	72 [33]	425 [2742]

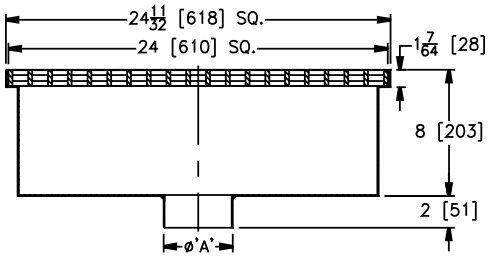

PREFIXES	DESCRIPTION	A PIPE SIZE	LIST PRICE
ZS1761*	Type 304 (CF8) Stainless Steel Body and Grate	4″, 6″, 8″	24,757.00
Z1761	A.R.E. Coated Fabricated Steel Body and Type 304 (CF8) Stainless Steel Grate	4″, 6″, 8″	20,074.00
ZM1761	Type 316 (CF8M) Stainless Steel Body and Grate	4″, 6″, 8″	POA
OUTLETS (SPECIFY PIPE SIZE IN INCHES AND TYPE OF OUTLET)			
OUTLET TYPE		PIPE SIZE/OUTLET TYPE	ADD
NH	No-Hub	4NH, 6NH, 8NH	N/C
SUFFIXES			ADD
–PB	Perforated Sediment Bucket		POA

*Regularly furnished unless otherwise specified.

This symbol denotes a product that is engineered to reduce installation and rework time.

For additional product information, please visit www.zurn.ca

Z1762 25" X 15-1/2" [635 MM X 394 MM] KETTLE DRAIN

ENGINEERING SPECIFICATION

Zurn ZS1762 25" x 15-1/2" [635 mm x 394 mm] kettle drain features Type 304 (CF8) stainless steel fabricated body and stainless steel two-piece grate with 1/8" [3 mm] bars on 3/8" [10 mm] center. One grate section comes with lift hole.

Dimensions in inches [mm]		Approximate Weight lb [kg]	Grate Open Area sq in [cm²]
A	R		
No-Hub (NH)			
3NH, 4NH	7-7/8 [200]	71 [32]	149 [961]
6NH	6-7/8 [175]		

PREFIXES	DESCRIPTION	A PIPE SIZE	LIST PRICE
Z1762	Acid Resistant Epoxy Coated Steel Body with Stainless Steel Top	3", 4"	27,332.00
		6"	27,332.00
ZS1762*	All Type 304 Fabricated Stainless Steel Body with Stainless Steel	3", 4"	32,258.00
		6"	32,258.00
OUTLETS (SPECIFY PIPE SIZE IN INCHES AND TYPE OF OUTLET)			
OUTLET TYPE		PIPE SIZE/OUTLET TYPE	ADD
NH	No-Hub	3NH, 4NH, 6NH	N/C
SUFFIXES			ADD
–SB	Solids Retaining Baffle		N/C

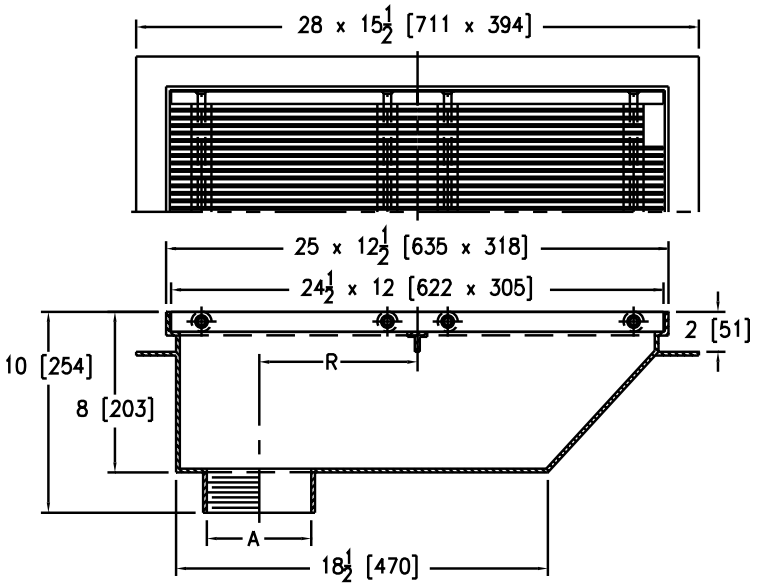

Z1763 37-9/16" X 22-7/8" [954 MM X 581 MM] KETTLE DRAIN

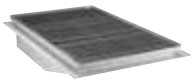

ENGINEERING SPECIFICATION

Zurn ZS1763 37-9/16" x 22-7/8" [954 mm x 581 mm] kettle drain features Type 304 (CF8) stainless steel fabricated body and stainless steel three-piece grate with 1/8" [3 mm] bars on 3/8" [10 mm] center. One grate section comes with lift hole.

Dimensions in inches [mm]		Approximate Weight lb [kg]	Grate Open Area sq in [cm²]
A	R		
No-Hub (NH)			
3NH, 4NH	14 [356]	125 [57]	420 [2709]
6NH	13 [330]		
8NH	12 [305]		
10NH	11 [279]		
12NH	10 [254]		

PREFIXES	DESCRIPTION	A PIPE SIZE	LIST PRICE
ZS1763*	All Type 304 Fabricated Stainless Steel Body with Stainless Steel	3", 4"	45,484.00
		6"	45,484.00
		8"	45,484.00
		10"	45,484.00
		12"	45,484.00
Z1763	Acid Resistant Epoxy Coated Steel Body with Stainless Steel Top	3", 4"	38,533.00
		6"	38,533.00
		8"	38,533.00
		10"	38,533.00
		12"	38,533.00

OUTLETS (SPECIFY PIPE SIZE IN INCHES AND TYPE OF OUTLET)			
OUTLET TYPE		PIPE SIZE/OUTLET TYPE	ADD
NH	No-Hub	3NH, 4NH, 6NH, 8NH, 10NH, 12NH	N/C

SUFFIXES		ADD
–SB	Solids Retaining Baffle	N/C

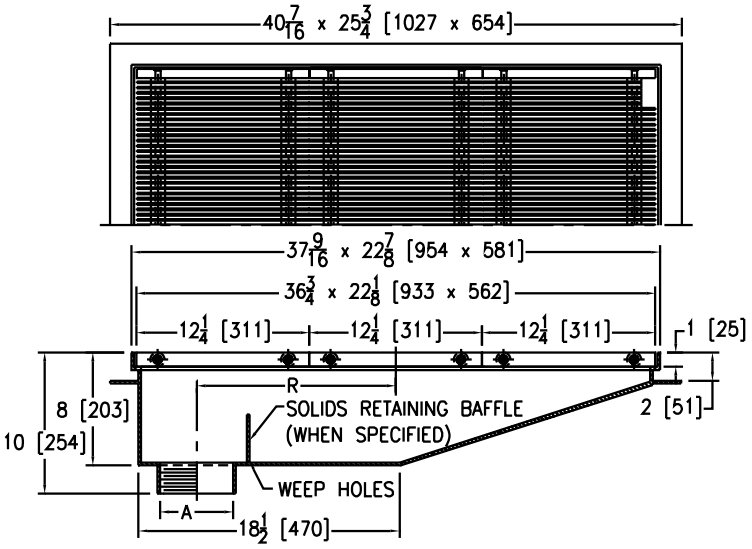

*Regularly furnished unless otherwise specified.

This symbol denotes a product that is engineered to reduce installation and rework time.

For additional product information, please visit www.zurn.ca

NOTES

SANI-FLOR RECEPTORS

SANI-FLOR RECEPTORS – MATERIAL SELECTION	**344**
SANI-FLOR RECEPTORS – OPTIONS AND VARIATIONS	**344**
Z1900 12" X 12" [305 MM X 305 MM] A.R.E. SANI-FLOR RECEPTOR WITH 6" [152 MM] SUMP DEPTH	**345**
⏲ **Z1900-RL** 12" X 12" X 6" [305 MM X 305 MM X 152 MM] REPLACEMENT FLOOR SINK LINER	**346**
Z1901 12" X 12" [305 MM X 305 MM] A.R.E. SANI-FLOR RECEPTOR WITH 8" [203 MM] SUMP DEPTH	**347**
⏲ **Z1901-RL** 12" X 12" X 8" [305 MM X 305 MM X 203 MM] REPLACEMENT FLOOR SINK LINER	**348**
Z1902 12" X 12" [305 MM X 305 MM] A.R.E. SANI-FLOR RECEPTOR WITH 10" [254 MM] SUMP DEPTH	**349**
⏲ **Z1902-RL** 12" X 12" X 10" [305 MM X 305 MM X 254 MM] REPLACEMENT FLOOR SINK LINER	**350**
⏲ **Z1903** SANI-FLOR RECEPTOR INSTALLATION STABILIZER	**350**
Z1910 8" X 8" [203 MM X 203 MM] A.R.E. SANI-FLOR RECEPTOR WITH 6" [152 MM] SUMP DEPTH	**351**
⏲ **Z1910-RL** 8" X 8" X 6" [203 MM X 203 MM X 152 MM] REPLACEMENT FLOOR SINK LINER	**352**
Z1920 16" X 16" [406 MM X 406 MM] A.R.C. SANI-FLOR RECEPTOR WITH 7" [178 MM] SUMP DEPTH	**353**
Z1926 16" X 16" [406 MM X 406 MM] A.R.C. SANI-FLOR RECEPTOR WITH 12" [305 MM] SUMP DEPTH	**354**
Z1930 8" X 4" [203 MM X 102 MM] A.R.C. SANI-FLOR RECEPTOR WITH 4" [102 MM] SUMP DEPTH	**355**
Z1940 12" X 6" [305 MM X 152 MM] A.R.C. SANI-FLOR RECEPTOR WITH 8" [203 MM] SUMP DEPTH	**356**
Z1950 12" [305 MM] DIAMETER A.R.E. SANI-FLOR RECEPTOR WITH 8" [203 MM] SUMP DEPTH	**357**
Z1960 8" [203 MM] DIAMETER A.R.E. SANI-FLOR RECEPTOR WITH 6" [152 MM] SUMP DEPTH	**358**
Z1970 9" [229 MM] DIAMETER SHALLOW A.R.C. SANI-FLOR RECEPTOR WITH 3" [76 MM] SUMP DEPTH	**359**
Z1982 12" X 12" [305 MM] STAINLESS STEEL SANI-FLOR CAN WASH DRAIN WITH 8" [203 MM] SUMP DEPTH	**360**
Z1995 24" X 16" [610 MM X 406 MM] A.R.C. SANI-FLOR RECEPTOR WITH 17" [432 MM] SUMP DEPTH	**360**

SANI-FLOR RECEPTORS – MATERIAL SELECTION

A.R.C. Acid Resisting Epoxy Coating is a baked-on powder coating which produces a smooth, hard, high gloss finish. This epoxy based coating offers high impact resistance and excellent life expectancy in all drainage applications.

A.R.E. Acid Resisting Porcelain Enamel is a substantially vitreous inorganic coating bonded to metal by fusion at a high temperature above 800°F. This coating offers excellent acid, abrasion, and wear resistance. The coating is extremely hard and is the ultimate for sanitation in drainage application.

SANI-FLOR RECEPTORS – OPTIONS AND VARIATIONS

Zurn Sani-Flor Receptor options are specified as a PREFIX and/or SUFFIX letter or number added to the series designation. Each floor sink in the catalog is listed with its individual Prefix/Suffix variation.

PREFIXES	
Z	Cast iron body with white acid resisting porcelain enamel (A.R.E.) interior and top.
ZN	Cast iron body with white acid resisting porcelain enamel (A.R.E.) interior and nickel bronze top.
SUFFIXES	
–C	Clamp Collar
–DX	Dex-O-Tex Flange
–HD	Stainless Steel Frame with Extra-Heavy-Duty Stainless Steel Grate - Specify in areas where working load exceeds 2000 pounds or where extreme chemical resistance properties are required.
–HP	Heel-Proof Grate
–K	Anchor Flange
–KC	Anchor Flange with Seepage Holes and Clamp Collar
–LD	Less Internal Bottom Dome Strainer
–LS	Less Secondary Strainer
–P	1/2″ Threaded Trap Primer Connection (See Z1023)
–S	Secondary Strainer
–T	Square Nickel Bronze Top
–TC	Neo-Loc Test Cap Gasket 2″-4″ NL Bottom Outlet Only
–VPS	Vandal-Proof Strainer
–WB	Water Supply Control Box
–1	Less Grate - Receives multiple indirect wastes from either condensate lines, air conditioners or other indirect drainage equipment specifically located in non-traffic areas.
–2	Half Grate - Receives indirect waste as with Suffix –1, but with 1/2 grate opening to easily accept waste from a single direction while providing a finished floor drain top on the opposite side.
–3	Three-Quarter Grate - Receives indirect waste as with Suffix –1, but with 3/4 grate and 1/4 opening to easily accept waste from a single source.
–4	Full Grate with Center Opening - Receives indirect waste as with Suffix -1, but with square center opening to accept waste from multiple directions.
–5	Grate with 4″ Diameter x 3-3/4″ High Funnel
–6	Grate with 6″ Diameter x 6″ High Funnel - Receives indirect waste from single pipe using round funnel which is centrally located on grate. Prevents splashing of waste around entire receptor. Can be relocated at job site to meet project requirements.
–7	Grate with 6-3/4″ x 3″ x 1″ High Oval Funnel
–8	Grate with 8-7/8″ x 3-5/8″ x 3-3/4″ High Oval Funnel - Receives indirect waste from a series of pipe discharges using oval funnel which is centrally located on grate. Can be relocated at job site to meet project requirements.
–9	Angle Frame and Grate - Used in food handling facilities incorporating a two-fold purpose. An angle drain provides a sanitary floor drain in an open service area where open half of grate is hidden inside cabinetry to receive an indirect waste discharge. Two-piece construction further enhances the ultimate in sanitation standards.
–11	Vandal-Proof Secured Grate - Prevents removal of grate by unauthorized individuals.
–12	Depressed Aluminum Grate - Specified for areas in restaurants, food markets, taverns, and many non-traffic areas. Grate recess accumulates food particles rather than let them fall into receptor.
–15	Solid Loose Set Cover - Specified when receptor is to be inactive a majority of the time.
–16	Half Solid Loose Set Cover - Same as Suffix –15, but with 1/2 cover open to accept indirect waste.

SUFFIXES	
–17	Three-Quarter Solid Loose Set Cover - Same as Suffix –16, but with 3/4 cover inactive.
–18	Solid Loose Set Cover with Square Center Opening - Same as Suffix –16, but with center opening and balance of cover inactive.
–19	Full Hinged Grate - Specified in light traffic areas where grate removal is prohibited for any length of time.
–23	Aluminum Sediment Bucket - Specified when interception and retention of solids is necessary. Used in food preparation areas.
–25	White Acid Resisting Sediment Bucket - Same as Suffix –23, but with acid resisting finish.
–31	Stainless Mesh Liner for Sediment Bucket - Specified when retention of fine particles is required. Provided with screen having 331 holes per square inch.
–32	Aluminum Dome Strainer
–33	White Acid Resisting Anti-Splash Dome Strainer - Use in areas where harsh chemicals or substances enter receptor.
–34	Nickel Bronze Anti-Splash Dome Strainer

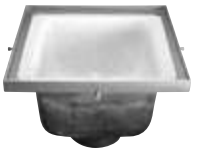

-1 Less Grate

-2 Half Grate

-3 Three-Quarter Grate

-4 Full Grate with Center Opening

-5, -6 Grate with Round Funnel

-7, -8 Grate with Oval Funnel

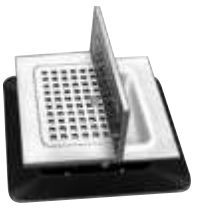

-9 Angle Frame and Grate

-12 Depressed Aluminum Grate

For additional product information, please visit www.zurn.ca

**Regularly furnished unless otherwise specified.*

This symbol denotes a product that is engineered to reduce installation and rework time.

Z1900 12″ X 12″ [305 MM X 305 MM] A.R.E. SANI-FLOR RECEPTOR WITH 6″ [152 MM] SUMP DEPTH

ENGINEERING SPECIFICATION

Zurn Z1900 Sani-Flor receptor, 12″ x 12″ x 6″ [305 mm x 305 mm x 152 mm] features deep cast iron body, square light-duty grate with 1/2″ [13 mm] slotted openings, and white acid resisting porcelain enamel interior and top – complete with white ABS anti-splash interior bottom dome strainer.

NOTE

†Add 1/2″ [13 mm] to 12″ [305 mm] dimension when specifying ZN1900 or ZS1900.

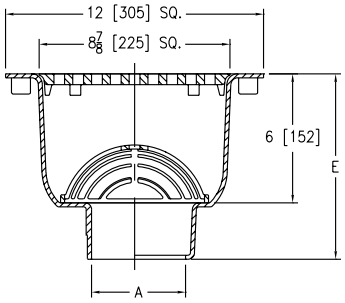

Dimensions in inches [mm]			Approximate Weight lb [kg]	Grate Open Area sq in [cm²]
A Pipe Size/ Outlet Type	E Body Height Dimensions			
	Z	ZN/ZS		
Inside Caulk (IC)				
3IC, 4IC	8-5/8 [219]	9-1/8 [232]	32 [15]	31 [200]
No-Hub (NH)				
2NH, 3NH, 4NH	8-5/8 [219]	9-1/8 [232]	32 [15]	31 [200]
Neo-Loc (NL)				
2NL, 3NL, 4NL	8 [203]	8-1/2 [216]	32 [15]	31 [200]

PREFIXES	DESCRIPTION	A PIPE SIZE	Z (A.R.E.)	ZN (N.B.)	ZS
Z1900*	Cast Iron Body with A.R.E. Interior and Top	2″, 3″, 4″	2,269.00	-	-
ZN1900†	Cast Iron Body with White A.R.E. Interior and Top, 12-1/2″ [318 mm] Square N.B. Frame and Full Grate with 1/2″ [13 mm] Square Openings	2″, 3″, 4″	-	3,319.00	-
ZS1900†	Cast Iron Body with White A.R.E. Interior and Top, 12-1/2″ [318 mm] Square Stainless Steel Frame and Full Grate with 1/2″ [13 mm] Openings	2″, 3″, 4″	-	-	POA

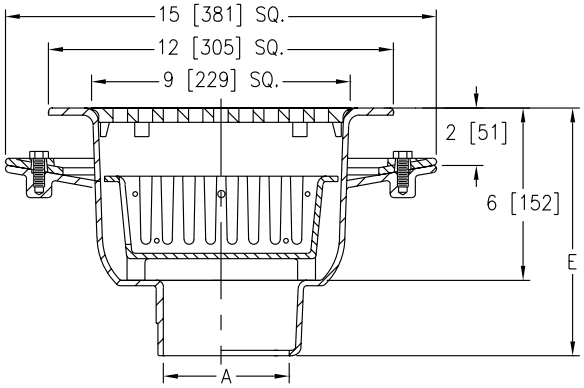

-KC-23 Options Shown

OUTLETS (SPECIFY PIPE SIZE IN INCHES AND TYPE OF OUTLET)					
OUTLET TYPE		PIPE SIZE/ OUTLET TYPE			ADD
IC	Inside Caulk	3IC, 4IC	N/C	N/C	N/C
NH	No-Hub	2NH, 3NH, 4NH	N/C	N/C	N/C
NL	Neo-Loc	2NL, 3NL, 4NL	N/C	N/C	N/C
					ADD
SUFFIXES			Z (A.R.E.)	ZN (N.B.)	ZS
–DX	Dex-O-Tex Flange (ZN Only)		N/A	1,197.00	N/A
–HD	Stainless Steel Frame with Extra-Heavy-Duty Stainless Steel Grate (ZS Only)		N/A	N/A	POA
–HP	Heel-Proof Grate (ZN Only)		N/A	422.00	N/A
–K	Anchor Flange		352.00	352.00	352.00
–KC	Anchor Flange with Seepage Holes and Clamp Collar		522.00	522.00	522.00
–LD	Less Bottom Dome Strainer		N/C	N/C	N/C
–P	1/2″ [13 mm] Trap Primer Connection (See Z1023)		118.00	118.00	118.00
◷ –SA	Stabilizer Assembly (See Z1903)		-	-	-
◷ –TC	Neo-Loc Test Cap Gasket (2″, 3″, 4″ [51 mm-102 mm] NL Bottom Outlet Only)		116.00	116.00	116.00
–VPS	Vandal-Proof Strainer (NH outlet only)		41.00	41.00	41.00
–1	Less Grate		N/C	N/C	N/C
–2	1/2 Grate		N/C	N/C	N/C
–3	3/4 Grate		N/C	N/C	N/C
–4	Full Grate with Center Opening (2″ [51 mm] Round for Z and 3-1/32″ [77 mm] Square for ZN or ZS)		158.00	158.00	158.00
–6	Grate with 6″ [152 mm] Dia. x 6″ [152 mm] High Funnel		439.00	569.00	POA
–8	Grate with 8-7/8″ x 3-5/8″ x 3-3/4″ [225 mm x 92 mm x 95 mm] High Oval Funnel		477.00	797.00	POA
–11	Vandal-Proof Secured Grate (ZN and ZS Only)		N/A	90.00	90.00
–15	Solid Loose Set Cover (Z and ZN Only)		106.00	207.00	N/A
–19	Full Hinged Grate (ZN Only)		N/A	333.00	N/A
–23	Aluminum Bucket		294.00	294.00	294.00
–25	White A.R.C. Bucket		594.00	594.00	594.00
–31	Stainless Steel Mesh Liner for Bucket		468.00	468.00	468.00
–32	Aluminum Dome Strainer		N/C	N/C	N/C
–33	White A.R.C. Anti-Splash Bottom Dome Strainer		314.00	314.00	314.00

*Regularly furnished unless otherwise specified.

◷ *This symbol denotes a product that is engineered to reduce installation and rework time.*

For additional product information, please visit www.zurn.ca

Z1900-RL 12" X 12" X 6" [305 MM X 305 MM X 152 MM] REPLACEMENT FLOOR SINK LINER

ENGINEERING SPECIFICATION

Zurn Z1900-RL 12" x 12" x 6" [305 mm x 305 mm x 152 mm] deep replacement floor sink liner features 18 gage, all Type 304 (CF8) fabricated stainless steel, internal pipe gasket seal, light-duty, slotted, loose set grate, and perforated removable dome strainer.

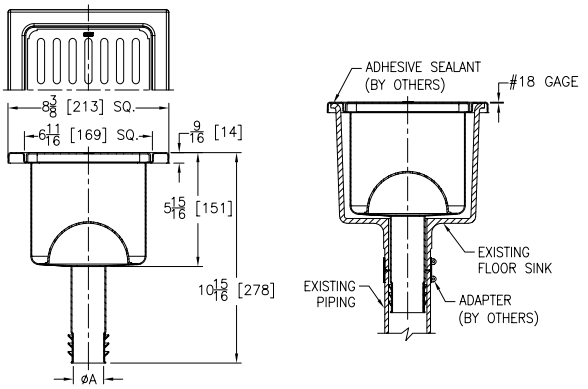

Dimensions in inches [mm]	Approximate Weight lb [kg]	Grate Open Area sq in [cm²]
A Pipe Size		
Gasket Seal		
2 [51], 3 [76], 4 [102]	6 [3]	21.1 [136]

PREFIXES	DESCRIPTION	A PIPE SIZE	LIST PRICE
Z1900*	All Type 304 (CF8) Fabricated Stainless Steel	2", 3" 4"	2,251.00
OUTLETS (SPECIFY PIPE SIZE IN INCHES AND TYPE OF OUTLET)			
OUTLET TYPE		PIPE SIZE/OUTLET TYPE	ADD
RL	Gasket Seal	RL2, RL3, RL4	N/C
SUFFIXES			ADD
–1	Less Grate		N/C
–2	1/2 Grate		N/C
–3	3/4 Grate		N/C
–Y	Sediment Bucket		250.00

For additional product information, please visit www.zurn.ca

**Regularly furnished unless otherwise specified.*

This symbol denotes a product that is engineered to reduce installation and rework time.

Z1901 12″ X 12″ [305 MM X 305 MM] A.R.E. SANI-FLOR RECEPTOR WITH 8″ [203 MM] SUMP DEPTH

ENGINEERING SPECIFICATION

Zurn Z1901 Sani-Flor receptor features 12″ x 12″ x 8″ [305 mm x 305 mm x 203 mm] deep cast iron body, square, light-duty grate with 1/2″ [13 mm] slotted openings, and white acid resisting porcelain enamel interior and top – complete with white ABS anti-splash interior bottom dome strainer.

NOTE

†Add 1/2″ [13 mm] to 12″ [305 mm] dimension when specifying ZN1901 or ZS1901.

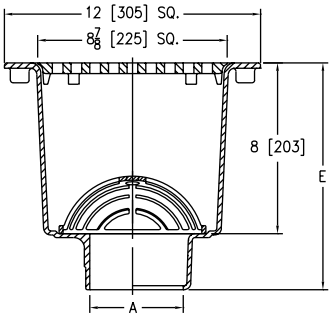

Dimensions in inches [mm]			Approximate Weight lb [kg]	Grate Open Area sq in [cm²]
A Pipe Size/ Outlet Type	E Body Height Dimensions			
	Z	ZN/ZS		
Inside Caulk (IC)				
3IC, 4IC	10-5/8 [270]	11-1/8 [283]	34 [15]	31 [200]
No-Hub (NH)				
2NH, 3NH, 4NH	10-5/8 [270]	11-1/8 [283]	34 [15]	31 [200]
Neo-Loc (NL)				
2NL, 3NL, 4NL	10 [254]	10-1/2 [267]	34 [15]	31 [200]

PREFIXES	DESCRIPTION	A PIPE SIZE	Z (A.R.E.)	ZN (N.B.)	ZS
Z1901*	Cast Iron Body with White A.R.E. Interior and Top	2″, 3″, 4″	2,208.00	–	–
ZN1901†	Cast Iron Body with White A.R.E. Interior and Top, 12-1/2″ [318 mm] Square N.B. Frame and Full Grate with 1/2″ [13 mm] Square Openings	2″, 3″, 4″	–	2,467.00	–
ZS1901†	Cast Iron Body with White A.R.E. Interior and Top, 12-1/2″ [318 mm] Square Stainless Steel Frame and Full Grate with 1/2″ [13 mm] Square Openings	2″, 3″, 4″	–	–	POA

OUTLETS (SPECIFY PIPE SIZE IN INCHES AND TYPE OF OUTLET)					
OUTLET	TYPE	PIPE SIZE/ OUTLET TYPE			ADD
IC	Inside Caulk	3IC, 4IC	N/C	N/C	N/C
NH	No-Hub	2NH, 3NH, 4NH	N/C	N/C	N/C
NL	Neo-Loc	2NL, 3NL, 4NL	N/C	N/C	N/C

SUFFIXES		Z (A.R.E.)	ZN (N.B.)	ADD ZS
–DX	Dex-O-Tex Flange (ZN Only)	N/A	1,197.00	N/A
–HD	Stainless Steel Frame with Extra-Heavy-Duty Stainless Steel Grate (ZS Only)	N/A	N/A	POA
–HP	Heel-Proof Grate (ZN Only)	N/A	422.00	N/A
–K	Anchor Flange	352.00	352.00	352.00
–KC	Anchor Flange with Seepage Holes and Clamp Collar	522.00	522.00	522.00
–LD	Less Bottom Dome Strainer	N/C	N/C	N/C
–P	1/2″ [13 mm] Trap Primer Connection (See Z1023)	118.00	118.00	118.00
◷ –TC	Neo-Loc Test Cap Gasket (2″, 3″, 4″ [51 mm-102 mm] NL Bottom Outlet Only)	116.00	116.00	116.00
–VPS	Vandal-Proof Strainer (NH outlet only)	41.00	41.00	41.00
–1	Less Grate	N/C	N/C	N/C
–2	1/2 Grate	N/C	N/C	N/C
–3	3/4 Grate	N/C	N/C	N/C
–4	Full Grate with Center Opening (2″ [51 mm] Round for Z and 3-1/32″ [77 mm] Square for ZN or ZS)	158.00	158.00	158.00
–6	Grate with 6″ [152 mm] Dia. x 6″ [152 mm] High Funnel	439.00	569.00	POA
–8	Grate with 8-7/8″ x 3-5/8″ x 3-3/4″ [225 mm x 92 mm x 95 mm] High Oval Funnel	477.00	797.00	POA
–11	Vandal-Proof Secured Grate (ZN and ZS Only)	N/A	90.00	90.00
–15	Solid Loose Set Cover (Z and ZN Only)	106.00	207.00	N/A
–19	Full Hinged Grate (ZN Only)	N/A	333.00	N/A
–23	Aluminum Bucket	294.00	294.00	294.00
–25	White A.R.C. Bucket	594.00	594.00	594.00
–31	Stainless Steel Mesh Liner for Bucket	468.00	468.00	468.00
–32	Aluminum Dome Strainer	N/C	N/C	N/C
–33	White A.R.C. Anti-Splash Bottom Dome Strainer	314.00	314.00	314.00

*Regularly furnished unless otherwise specified.

◷ *This symbol denotes a product that is engineered to reduce installation and rework time.*

For additional product information, please visit www.zurn.ca

Z1901-RL 12" X 12" X 8" [305 MM X 305 MM X 203 MM] REPLACEMENT FLOOR SINK LINER

ENGINEERING SPECIFICATION

Zurn Z1901-RL 12" x 12" x 8" [305 mm x 305 mm x 203 mm] deep replacement floor sink liner features 18 gage, all Type 304 (CF8) fabricated stainless steel, internal pipe gasket seal, light-duty, slotted, loose set grate, and perforated removable dome strainer.

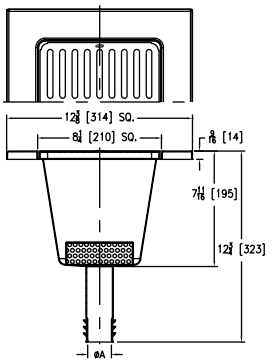

A Pipe Size inches [mm]	Approximate Weight lb [kg]	Grate Open Area sq in [cm²]
Gasket Seal		
2 [51], 3 [76], 4 [102]	7 [3]	21.7 [140]

PREFIXES	DESCRIPTION	A PIPE SIZE	LIST PRICE
Z1901*	All Type 304 (CF8) Fabricated Stainless Steel	2", 3", 4"	2,419.00
OUTLETS (SPECIFY PIPE SIZE IN INCHES AND TYPE OF OUTLET)			
OUTLET TYPE		PIPE SIZE/OUTLET TYPE	ADD
RL	Gasket Seal	RL2, RL3, RL4	N/C
SUFFIXES			ADD
–1	Less Grate		N/C
–2	1/2 Grate		N/C
–3	3/4 Grate		N/C
–Y	Sediment Bucket		262.00

For additional product information, please visit www.zurn.ca

**Regularly furnished unless otherwise specified.*

This symbol denotes a product that is engineered to reduce installation and rework time.

Z1902 12″ X 12″ [305 MM X 305 MM] A.R.E. SANI-FLOR RECEPTOR WITH 10″ [254 MM] SUMP DEPTH

ENGINEERING SPECIFICATION

Zurn Z1902 Sani-Flor receptor features 12″ x 12″ x 10″ [305 mm x 305 mm x 254 mm] deep cast iron body, square, light-duty grate with 1/2″ [13 mm] slotted openings, and white acid resisting porcelain enamel interior and top – complete with white ABS anti-splash interior bottom dome strainer.

NOTE

†Add 1/2″ [13 mm] to 12″ [305 mm] dimension when specifying ZN1902 or ZS1902.

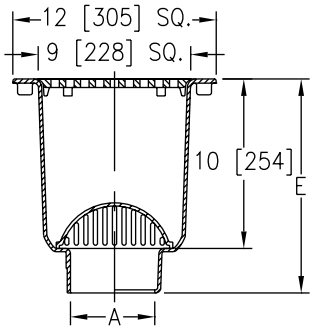

Dimensions in inches [mm]			Approximate Weight lb [kg]	Grate Open Area sq in [cm²]
A Pipe Size/ Outlet Type	E Body Height Dimensions			
	Z	ZN/ZS		
Inside Caulk (IC)				
3IC, 4IC	12-5/8 [321]	13-1/8 [333]	36 [16]	31 [200]
No-Hub (NH)				
2NH, 3NH, 4NH	12-5/8 [321]	13-1/8 [333]	36 [16]	31 [200]
Neo-Loc (NL)				
2NL, 3NL, 4NL	12 [305]	12-1/2 [318]	36 [16]	31 [200]

PREFIXES	DESCRIPTION	A PIPE SIZE	Z (A.R.E.)	ZN (N.B.)	ZS
Z1902*	Cast Iron Body with White A.R.E. Interior and Top	2″, 3″, 4″	2,336.00	–	–
ZN1902†	Cast Iron Body with White A.R.E. Interior and Top, 12-1/2″ [318 mm] Square N.B. Frame and Full Grate with 1/2″ [13 mm] Square Openings	2″, 3″, 4″	–	3,387.00	–
ZS1902†	Cast Iron Body with White A.R.E. Interior and Top, 12-1/2″ [318 mm] Square Stainless Steel Frame and Full Grate with 1/2″ [13 mm] Square Openings	2″, 3″, 4″	–	–	POA

OUTLETS (SPECIFY PIPE SIZE IN INCHES AND TYPE OF OUTLET)					
OUTLET	TYPE	PIPE SIZE/ OUTLET TYPE			ADD
IC	Inside Caulk	3IC, 4IC	N/C	N/C	N/C
NH	No-Hub	2NH, 3NH, 4NH	N/C	N/C	N/C
NL	Neo-Loc	2NL, 3NL, 4NL	N/C	N/C	N/C

SUFFIXES		Z (A.R.E.)	ZN (N.B.)	ADD ZS
–DX	Dex-O-Tex Flange (ZN Only)	N/A	1,197.00	N/A
–HD	Stainless Steel Frame with Extra-Heavy-Duty Stainless Steel Grate (ZS Only)	N/A	N/A	POA
–HP	Heel-Proof Grate (ZN Only)	N/A	422.00	N/A
–K	Anchor Flange	352.00	352.00	352.00
–KC	Anchor Flange with Seepage Holes and Clamp Collar	522.00	522.00	522.00
–LD	Less Bottom Dome Strainer	N/C	N/C	N/C
–P	1/2″ Trap Primer Connection (See Z1023)	118.00	118.00	118.00
–SA	Stabilizer Assembly (See Z1903)	N/C	N/C	N/C
–TC	Neo-Loc Test Cap Gasket (2″, 3″, 4″ [51 mm-102 mm] NL Bottom Outlet Only)	116.00	116.00	116.00
–VPS	Vandal-Proof Strainer (NH outlet only)	41.00	41.00	41.00
–1	Less Grate	N/C	N/C	N/C
–2	1/2 Grate	N/C	N/C	N/C
–3	3/4 Grate	N/C	N/C	N/C
–4	Full Grate with Center Opening (2″ [51 mm] Round for Z and 3-1/32″ [77 mm] Square for ZN or ZS)	158.00	158.00	158.00
–6	Grate with 6″ [152 mm] Dia. x 6″ [152 mm] High Funnel	439.00	569.00	POA
–8	Grate with 8-7/8″ x 3-5/8″ x 3-3/4″ [225 mm x 92 mm x 95 mm] High Oval Funnel	477.00	797.00	POA
–11	Vandal-Proof Secured Grate (ZN and ZS Only)	N/A	90.00	95.00
–15	Solid Loose Set Cover (Z and ZN Only)	111.00	207.00	N/A
–19	Full Hinged Grate (ZN Only)	N/A	333.00	N/A
–23	Aluminum Bucket	294.00	294.00	294.00
–25	White A.R.C. Bucket	594.00	594.00	594.00
–31	Stainless Steel Mesh Liner for Bucket	468.00	468.00	468.00
–32	Aluminum Dome Strainer	N/C	N/C	N/C
–33	White A.R.C. Anti-Splash Bottom Dome Strainer	314.00	314.00	314.00

*Regularly furnished unless otherwise specified.

This symbol denotes a product that is engineered to reduce installation and rework time.

For additional product information, please visit www.zurn.ca

Z1902-RL 12″ X 12″ X 10″ [305 MM X 305 MM X 254 MM] REPLACEMENT FLOOR SINK LINER

ENGINEERING SPECIFICATION

Zurn Z1902-RL 12″ x 12″ x 10″ [305 mm x 305 mm x 254 mm] deep replacement floor sink liner features 18 gage, all Type 304 (CF8) fabricated stainless steel, internal pipe gasket seal, light-duty, slotted, loose set grate, and perforated removable dome strainer.

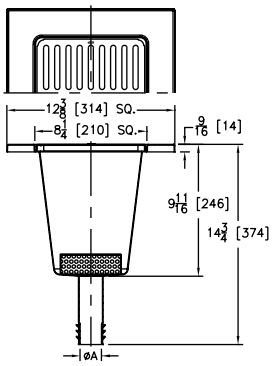

A Pipe Size inches [mm]	Approximate Weight lb [kg]	Grate Open Area sq in [cm²]
Gasket Seal		
2 [51], 3 [76], 4 [102]	8 [4]	21.7 [140]

PREFIXES	DESCRIPTION	A PIPE SIZE	LIST PRICE
Z1902*	All Type 304 (CF8) Fabricated Stainless Steel	2″, 3″, 4″	2,720.00
OUTLETS (SPECIFY PIPE SIZE IN INCHES AND TYPE OF OUTLET)			
OUTLET TYPE		PIPE SIZE/OUTLET TYPE	ADD
RL	Gasket Seal	RL2, RL3, RL4	N/C
SUFFIXES			ADD
–1	Less Grate		N/C
–2	1/2 Grate		N/C
–3	3/4 Grate		N/C
–Y	Sediment Bucket		250.00

Z1903 SANI-FLOR RECEPTOR INSTALLATION STABILIZER

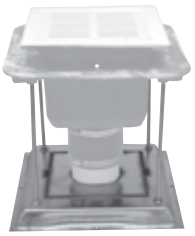

Patented

ENGINEERING SPECIFICATION

Zurn Z1903 Sani-Flor receptor installation stabilizer features a 16-gage, galvanized steel plate with variable pipe opening, four support stud holes, and four nail holes. Comes complete with hardware bag containing four 3/8″-16 x 12″ [305 mm] long studs, eight 3/8″-16 flange locknuts and coverplate with hole for standard 2″ [51 mm] pipe size and perforated knockouts for 3″ [76 mm] and 4″ [102 mm] pipe connections. (For use with Z1900, Z1901, and Z1902 Sani-Flor receptors.)

NOTE

Stabilizer plate may be used without coverplate for narrow floor applications where the drain body will be recessed into stabilizer plate.

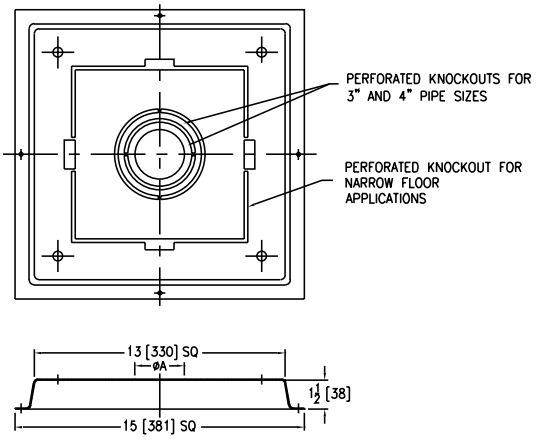

Dimensions in inches [mm]	
Pipe Size	A Diameter
2 [51]	2-9/16 [65]
3 [76]	3-11/16 [94]
4 [102]	4-11/16 [119]

PREFIXES	DESCRIPTION	PIPE SIZE	LIST PRICE
Z1903*	Sani-Flor Receptor Installation Stabilizer	2″, 3″ 4″	219.00

For additional product information, please visit www.zurn.ca

**Regularly furnished unless otherwise specified.*

This symbol denotes a product that is engineered to reduce installation and rework time.

Z1910 8″ X 8″ [203 MM X 203 MM] A.R.E. SANI-FLOR RECEPTOR WITH 6″ [152 MM] SUMP DEPTH

ENGINEERING SPECIFICATION

Zurn Z1910 Sani-Flor receptor features 8″ x 8″ x 6″ [203 mm x 203 mm x 152 mm] deep cast iron body, square medium-duty grate with 7/16″ [11 mm] slotted openings, and white acid resisting porcelain enamel interior and top – complete with white ABS anti-splash interior bottom dome strainer.

NOTE

†Add 1/2″ [13 mm] to 8″ [203 mm] dimension when specifying ZN1910.

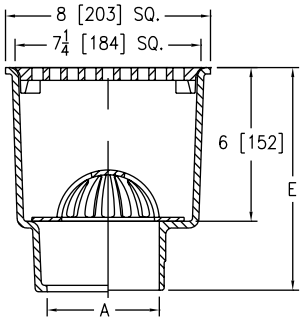

Dimensions in inches [mm]			Approximate Weight lb [kg]	Grate Open Area sq in [cm²]
A Pipe Size/ Outlet Type	E Body Height Dimensions			
	Z	ZN		
Inside Caulk				
3IC, 4IC	8-3/4 [222]	9-1/4 [235]	25 [11]	19 [123]
No-Hub (NH)				
2NH, 3NH, 4NH	8-5/8 [219]	9-1/8 [232]	25 [11]	19 [123]
Neo-Loc (NL)				
2NL, 3NL, 4NL	8 [203]	8-1/2 [216]	25 [11]	19 [123]

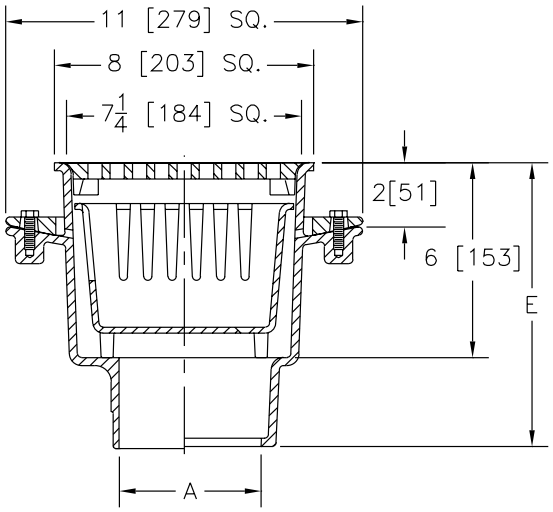

-KC-23 Options Shown

PREFIXES	DESCRIPTION	A PIPE SIZE	Z (A.R.E.)	ZN (N.B.)
Z1910*	Cast Iron Body with White A.R.E. Interior and Top	2″, 3″ 4″	**1,538.00**	**–**
ZN1910†	Cast Iron Body with White A.R.E. Interior and Top, 8-9/16″ [218 mm] Square N.B. Frame, and Full Grate with 5/16″ [8 mm] Square Openings	2″, 3″ 4″	**–**	**2,186.00**
OUTLETS (SPECIFY PIPE SIZE IN INCHES AND TYPE OF OUTLET)				
OUTLET TYPE		**PIPE SIZE/ OUTLET TYPE**		**ADD**
IC	Inside Caulk	3IC, 4IC	**N/C**	**N/C**
NH	No-Hub	2NH, 3NH, 4NH	**N/C**	**N/C**
NL	Neo-Loc	2NL, 3NL, 4NL	**N/C**	**N/C**
				ADD
SUFFIXES			**Z (A.R.E.)**	**ZN (N.B.)**
–DX	Dex-O-Tex Flange (ZN Only)		**N/A**	**1,017.00**
–K	Anchor Flange		**185.00**	**185.00**
–KC	Anchor Flange with Seepage Holes and Clamp Collar		**330.00**	**330.00**
–LD	Less Bottom Dome Strainer		**N/C**	**N/C**
–P	1/2″ Trap Primer Connection (See Z1023)		**170.00**	**170.00**
◷ **–TC**	Neo-Loc Test Cap Gasket (2″, 3″, 4″ [51 mm-102 mm] NL Bottom Outlet Only)		**116.00**	**116.00**
–1	Less Grate		**N/C**	**N/C**
–2	1/2 Grate		**N/C**	**N/C**
–3	3/4 Grate		**N/C**	**N/C**
–4	Full Grate with Square Center Opening		**158.00**	**158.00**
–6	Grate with 6″ [152 mm] Dia. x 6″ [152 mm] High Funnel		**439.00**	**569.00**
–8	Grate with 8-7/8″ x 3-5/8″ x 3-3/4″ [225 mm x 92 mm x 95 mm] High Oval Funnel		**477.00**	**797.00**
–11	Vandal-Proof Secured Grate (ZN only)		**N/A**	**90.00**
–15	Solid Loose Set Cover		**98.00**	**173.00**
–19	Full Hinged Grate (ZN only)		**N/A**	**352.00**
–23	Aluminum Bucket		**198.00**	**198.00**
–25	White A.R.C. Bucket		**431.00**	**431.00**
–31	Stainless Steel Mesh Liner for Bucket		**468.00**	**468.00**
–32	Aluminum Dome Strainer		**N/C**	**N/C**
–33	White A.R.C. Anti-Splash Bottom Dome Strainer		**N/C**	**N/C**

**Regularly furnished unless otherwise specified.*

◷ *This symbol denotes a product that is engineered to reduce installation and rework time.*

For additional product information, please visit www.zurn.ca

Z1910-RL 8″ X 8″ X 6″ [203 MM X 203 MM X 152 MM] REPLACEMENT FLOOR SINK LINER

ENGINEERING SPECIFICATION

Zurn Z1910-RL 8″ x 8″ x 6″ [203 mm x 203 mm x 152 mm] deep replacement floor sink liner features 18 gage, all Type 304 (CF8) fabricated stainless steel, internal pipe gasket seal, light-duty, slotted, loose set grate, and perforated removable dome strainer.

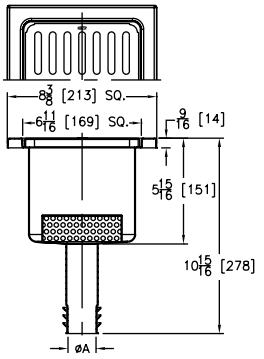

A Pipe Size inches [mm]	Approximate Weight lb [kg]	Grate Open Area sq in [cm²]
Gasket Seal		
2 [51], 3 [76], 4 [102]	5 [2]	12.2 [79]

PREFIXES	DESCRIPTION	A PIPE SIZE	LIST PRICE
Z1910*	All Type 304 (CF8) Fabricated Stainless Steel	2″, 3″, 4″	1,867.00
OUTLETS (SPECIFY PIPE SIZE IN INCHES AND TYPE OF OUTLET)			
OUTLET TYPE		PIPE SIZE/OUTLET TYPE	ADD
RL	Gasket Seal	RL2, RL3, RL4	N/C
SUFFIXES			ADD
–1	Less Grate		N/C
–2	1/2 Grate		N/C
–3	3/4 Grate		N/C
–Y	Sediment Bucket		250.00

For additional product information, please visit www.zurn.ca

**Regularly furnished unless otherwise specified.*

This symbol denotes a product that is engineered to reduce installation and rework time.

Z1920 16″ X 16″ [406 MM X 406 MM] A.R.C. SANI-FLOR RECEPTOR WITH 7″ [178 MM] SUMP DEPTH

ENGINEERING SPECIFICATION

Zurn Z1920 Sani-Flor receptor features 16″ x 16″ x 7″ [406 mm x 406 mm x 178 mm] deep cast iron body, square, slotted heavy-duty grate, and white acid resisting epoxy coated interior and top – complete with aluminum anti-splash interior bottom dome strainer.

NOTE

†Add 3/4″ [19 mm] to 16″ [406 mm] dimension when specifying ZN1920.

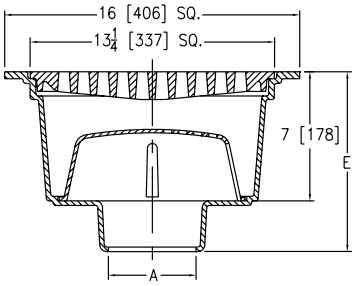

Dimensions in inches [mm]			Approximate Weight lb [kg]	Grate Open Area sq in [cm²]
A Pipe Size/ Outlet Type	E Body Height Dimensions			
	Z	ZN		
Inside Caulk (IC)				
2IC, 3IC, 4IC, 6IC	9-3/4 [248]	9-15/16 [252]	81 [37]	54 [348]
8IC	10-1/4 [260]	10-7/16 [265]		
Neo-Loc (NL)				
2NL, 3NL, 4NL	9 [229]	9-3/16 [233]	81 [37]	54 [348]

PREFIXES	DESCRIPTION	A PIPE SIZE	Z (A.R.C.)	ZN (N.B.)
Z1920*	Cast Iron Body with White A.R.C. Interior and Top	2″, 3″ 4″, 6″, 8″	5,504.00	–
ZN1920†	Cast Iron Body with White A.R.C. Interior and Top, 16-3/4″ [425 mm] Square N.B. Frame, and Full Slotted Grate	2″, 3″ 4″, 6″, 8″	–	6,053.00
OUTLETS (SPECIFY PIPE SIZE IN INCHES AND TYPE OF OUTLET)				
OUTLET TYPE		PIPE SIZE/OUTLET TYPE		ADD
IC	Inside Caulk	2IC, 3IC, 4IC, 6IC, 8IC	N/C	N/C
NL	Neo-Loc	2NL, 3NL, 4NL	N/C	N/C

SUFFIXES		Z (A.R.C.)	ADD ZN (N.B.)
–K	Anchor Flange	369.00	369.00
–KC	Anchor Flange with Seepage Holes and Clamp Collar	920.00	920.00
–LD	Less Bottom Dome Strainer	N/C	N/C
–P	1/2″ Trap Primer Connection (See Z1023)	170.00	170.00
⏲ –TC	Neo-Loc Test Cap Gasket (2″, 3″, 4″ [51 mm-102 mm] NL Bottom Outlet Only)	116.00	116.00
–1	Less Grate	N/C	N/C
–2	1/2 Grate	N/C	N/C
–3	3/4 Grate	N/C	N/C
–4	Full Grate with Square Center Opening	N/C	N/C
–6	Grate with 6″ [152 mm] Dia. x 6″ [152 mm] High Funnel	439.00	569.00
–8	Grate with 8-7/8″ x 3-5/8″ x 3-3/4″ [225 mm x 92 mm x 95 mm] High Oval Funnel	477.00	797.00
–11	Vandal-Proof Secured Grate	N/A	90.00
–15	Solid Loose Set Cover	157.00	610.00
–23	Aluminum Bucket	828.00	828.00
–25	White A.R.C. Bucket	2,319.00	2,319.00
–31	Stainless Steel Mesh Liner for Bucket	933.00	933.00
–33	White A.R.C. Anti-Splash Bottom Dome Strainer	314.00	314.00

*Regularly furnished unless otherwise specified.

⏲ *This symbol denotes a product that is engineered to reduce installation and rework time.*

For additional product information, please visit www.zurn.ca

Z1926 16″ X 16″ [406 MM X 406 MM] A.R.C. SANI-FLOR RECEPTOR WITH 12″ [305 MM] SUMP DEPTH

ENGINEERING SPECIFICATION

Zurn Z1926 Sani-Flor receptor features 16″ x 16″ x 12″ [406 mm x 406 mm x 305 mm] deep cast iron body, seepage flange, square, heavy-duty grate with 9/16″ [14 mm] slotted openings, and white acid resisting epoxy coated interior and top – complete with aluminum anti-splash interior bottom dome strainer.

NOTE

†Add 3/4″ [19 mm] to 16″ [406 mm] dimension when specifying ZN1926.

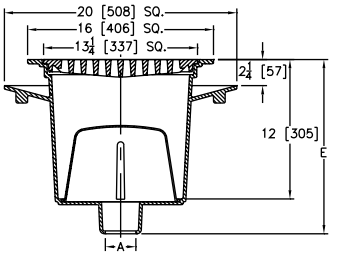

Dimensions in inches [mm]			Approximate Weight lb [kg]	Grate Open Area sq in [cm²]
A Pipe Size/ Outlet Type	E Body Height Dimensions			
	Z	ZN		
Inside Caulk (IC)				
3IC, 4IC, 6IC	15 [381]	15-3/16 [386]	150 [68]	54 [348]
No-Hub (NH)				
2NH, 3NH, 4NH, 6NH, 8NH	15 [381]	15-3/16 [386]	150 [68]	54 [348]
Neo-Loc (NL)				
2NL, 3NL, 4NL	14-1/4 [362]	14-7/16 [367]	150 [68]	54 [348]

PREFIXES	DESCRIPTION	A PIPE SIZE	Z (A.R.C.)	ZN (N.B.)
Z1926*	Cast Iron Body with White A.R.C. Interior and Top	2″, 3″ 4″, 5″, 6″, 8″	5,504.00	–
ZN1926†	Cast Iron Body with White A.R.C. Interior and Top, 16-3/4″ [425 mm] Square N.B. Frame, and Full Slotted Grate	2″, 3″ 4″, 5″, 6″, 8″	–	7,770.00

OUTLETS (SPECIFY PIPE SIZE IN INCHES AND TYPE OF OUTLET)				
OUTLET	TYPE	PIPE SIZE/OUTLET TYPE		ADD
IC	Inside Caulk	3IC, 4IC, 6IC	N/C	N/C
NH	No-Hub	2NH, 3NH, 4NH, 5NH, 6NH, 8NH	N/C	N/C
NL	Neo-Loc	2NL, 3NL, 4NL	N/C	N/C

SUFFIXES		Z (A.R.C.)	ADD ZN (N.B.)
–C	Clamp Collar	561.00	561.00
–LD	Less Bottom Dome Strainer	N/C	N/C
–P	1/2″ Trap Primer Connection (See Z1023)	170.00	170.00
◷ –TC	Neo-Loc Test Cap Gasket (2″, 3″, 4″ [51 mm-102 mm] NL Bottom Outlet Only)	116.00	116.00
–1	Less Grate	N/C	N/C
–2	1/2 Grate	N/C	N/C
–3	3/4 Grate	N/C	N/C
–4	Full Grate with Square Center Opening	158.00	158.00
–6	Grate with 6″ [152 mm] Dia. x 6″ [152 mm] High Funnel	439.00	569.00
–8	Grate with 8-7/8″ x 3-5/8″ x 3-3/4″ [225 mm x 92 mm x 95 mm] High Oval Funnel	477.00	797.00
–11	Vandal-Proof Secured Grate	N/A	90.00
–15	Solid Loose Set Cover	157.00	610.00
–23	Aluminum Bucket	828.00	828.00
–25	White A.R.C. Bucket	2,319.00	2,319.00
–31	Stainless Steel Mesh Liner for Bucket	933.00	933.00
–33	White A.R.C. Anti-Splash Bottom Dome Strainer	314.00	314.00

For additional product information, please visit www.zurn.ca

**Regularly furnished unless otherwise specified.*

◷ *This symbol denotes a product that is engineered to reduce installation and rework time.*

Z1930 8″ X 4″ [203 MM X 102 MM] A.R.C. SANI-FLOR RECEPTOR WITH 4″ [102 MM] SUMP DEPTH

ENGINEERING SPECIFICATION

Zurn Z1930 Sani-Flor receptor features 8″ x 4″ x 4″ [203 mm x 102 mm x 102 mm] deep cast iron body and rectangular, square hole, light-duty grate with white acid resisting epoxy coated interior and top – complete with white ABS anti-splash interior bottom dome strainer.

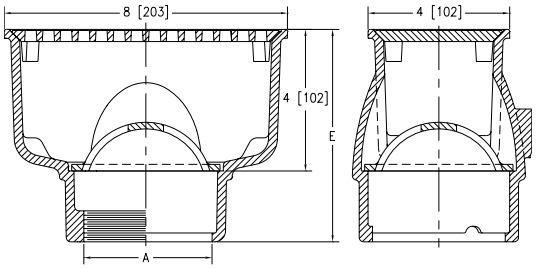

Dimensions in inches [mm]			Approximate Weight lb [kg]	Grate Open Area sq in [cm²]
A Pipe Size/ Outlet Type	E Body Height Dimensions			
	Z	ZN		
Threaded (IP)				
2IP, 3IP	6 [152]	6-3/8 [162]	11 [5]	7.5 [48]
Neo-Loc (NL)				
2NL, 3NL	5-13/16 [148]	6-3/16 [157]	11 [5]	7.5 [48]

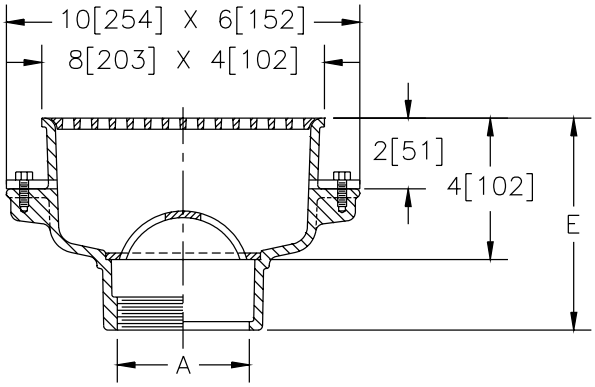

-KC Option Shown

Z1930-KC Sani-Flor Receptor, 8″ x 4″ x 4″ deep cast iron body and rectangular square hole light-duty grate with white acid resisting epoxy coated interior and top with seepage flange with seepage holes and clamp collar (-KC).

PREFIXES	DESCRIPTION	A PIPE SIZE	Z (A.R.C.)	ZN (N.B.)
Z1930*	Cast Iron Body with White A.R.C. Interior and Top	2″, 3″	1,589.00	–
ZN1930	Cast Iron Body with White A.R.C. Interior and Top, 8-3/4″ x 4-3/4″ [222 mm x 121 mm] N.B. Frame, and Full Grate with 5/16″ [8 mm] Square Openings	2″, 3″	–	1,749.00
OUTLETS (SPECIFY PIPE SIZE IN INCHES AND TYPE OF OUTLET)				
OUTLET	**TYPE**	**PIPE SIZE/ OUTLET TYPE**		**ADD**
IP	Threaded	2IP, 3IP	N/C	N/C
NL	Neo-Loc	2NL, 3NL	N/C	N/C
SUFFIXES			**ADD Z (A.R.C.)**	**ADD ZN (N.B.)**
–K	Anchor Flange		273.00	273.00
–KC	Anchor Flange with Seepage Holes and Clamp Collar		461.00	461.00
–LD	Less Bottom Dome Strainer		N/C	N/C
–P	1/2″ [13 mm] Trap Primer Connection (See Z1023)		170.00	170.00
–S	Secondary Strainer		N/C	N/C
⏲ –TC	Neo-Loc Test Cap Gasket (2″, 3″ [51 mm-76 mm] NL Bottom Outlet Only)		116.00	116.00
–1	Less Grate		N/C	N/C
–2	1/2 Grate		N/C	N/C
–3	3/4 Grate		N/C	N/C
–4	Full Grate with Square Center Opening		158.00	158.00
–6	Grate with 6″ [152 mm] Dia. x 6″ [152 mm] High Funnel		439.00	569.00
–8	Grate with 8-7/8″ x 3-5/8″ x 3-3/4″ [225 mm x 92 mm x 95 mm] High Oval Funnel		477.00	797.00
–11	Vandal-Proof Secured Grate (ZN only)		N/A	90.00
–15	Solid Loose Set Cover (ZN only)		101.00	173.00
–23	Aluminum Bucket		193.00	193.00
–25	White A.R.C. Bucket		471.00	471.00
–31	Stainless Steel Mesh Liner for Bucket		471.00	471.00
–32	Aluminum Dome Strainer		N/C	N/C
–33	White A.R.C. Anti-Splash Bottom Dome Strainer		314.00	314.00

**Regularly furnished unless otherwise specified.*

⏲ *This symbol denotes a product that is engineered to reduce installation and rework time.*

For additional product information, please visit www.zurn.ca

Z1940 12″ X 6″ [305 MM X 152 MM] A.R.C. SANI-FLOR RECEPTOR WITH 8″ [203 MM] SUMP DEPTH

ENGINEERING SPECIFICATION

Zurn Z1940 Sani-Flor receptor features 12″ x 6″ x 8″ [305 mm x 152 mm x 203 mm] deep cast iron body and rectangular, square hole, light-duty grate with white acid resisting epoxy coated interior and top – complete with white ABS anti-splash interior bottom dome strainer.

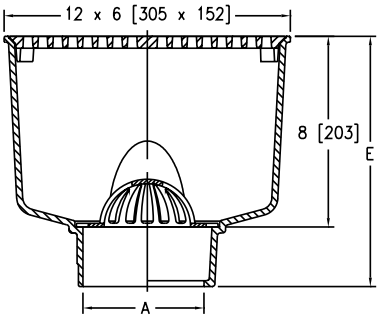

Dimensions in inches [mm]			Approximate Weight lb [kg]	Grate Open Area sq in [cm²]
A Pipe Size/ Outlet Type	E Body Height Dimensions			
	Z	ZN		
Inside Caulk (IC)				
2IC, 3IC, 4IC	10-1/2 [267]	10-7/8 [276]	28 [13]	17 [110]
No-Hub (NH)				
2NH, 3NH, 4NH	10-1/2 [267]	10-7/8 [276]	28 [13]	17 [110]
Neo-Loc (NL)				
2NL, 3NL, 4NL	10 [254]	10-3/8 [264]	28 [13]	17 [110]

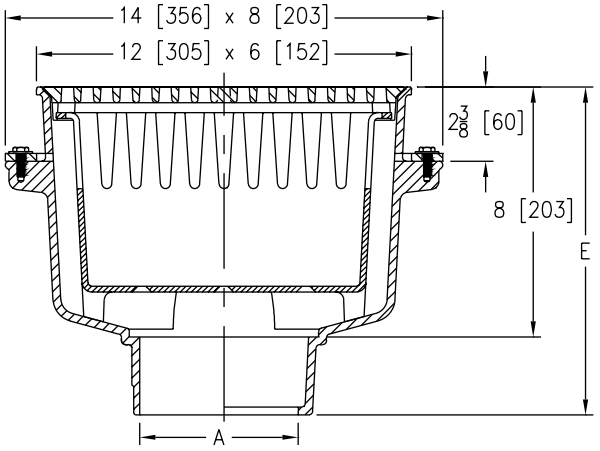

-KC-23 Options Shown

Z1940-KC-23 Sani-Flor Receptor, 12″ x 6″ x 8″ deep cast iron body and rectangular square hole light-duty grate with white acid resisting epoxy coated interior and top with seepage flange with seepage holes and clamp collar (-KC) and aluminum bucket (-23).

PREFIXES	DESCRIPTION	A PIPE SIZE	Z (A.R.C.)	ZN (N.B.)
Z1940*	Cast Iron Body with White A.R.C. Interior and Top	2″, 3″, 4″	2,149.00	–
ZN1940	Cast Iron Body with White A.R.C. Interior and Top, 13″ x 7″ [330 mm x 178 mm] N.B. Frame, and Full Grate with 3/8″ Square Openings	2″, 3, 4″	–	2,367.00
OUTLETS (SPECIFY PIPE SIZE IN INCHES AND TYPE OF OUTLET)				
OUTLET	**TYPE**	**PIPE SIZE/ OUTLET TYPE**		**ADD**
IC	Inside Caulk	2IC, 3IC, 4IC	N/C	N/C
NH	No-Hub	2NH, 3NH, 4NH	N/C	N/C
NL	Neo-Loc	2NL, 3NL, 4NL	N/C	N/C
				ADD
SUFFIXES			**Z (A.R.C.)**	**ZN (N.B.)**
–K	Anchor Flange		273.00	273.00
–KC	Anchor Flange with Seepage Holes and Clamp Collar		461.00	461.00
–LD	Less Bottom Dome Strainer		N/C	N/C
–P	1/2″ [13 mm] Trap Primer Connection (See Z1023)		170.00	170.00
–S	Secondary Strainer		N/C	N/C
⏲ –TC	Neo-Loc Test Cap Gasket (2″, 3″, 4″ [51 mm-102 mm] NL Bottom Outlet Only)		116.00	116.00
–1	Less Grate		N/C	N/C
–2	1/2 Grate		N/C	N/C
–3	3/4 Grate		N/C	N/C
–4	Full Grate with Square Center Opening		158.00	158.00
–6	Grate with 6″ [152 mm] Dia. x 6″ [152 mm] High Funnel		439.00	569.00
–8	Grate with 8-7/8″ x 3-5/8″ x 3-3/4″ [225 mm x 92 mm x 95 mm] High Oval Funnel		477.00	797.00
–11	Vandal-Proof Secured Grate (ZN only)		N/A	90.00
–15	Solid Loose Set Cover		101.00	173.00
–23	Aluminum Bucket		193.00	193.00
–25	White A.R.C. Bucket		471.00	471.00
–31	Stainless Steel Mesh Liner for Bucket		471.00	471.00
–32	Aluminum Dome Strainer		N/C	N/C
–33	White A.R.C. Anti-Splash Bottom Dome Strainer		314.00	314.00

For additional product information, please visit www.zurn.ca

**Regularly furnished unless otherwise specified.*

⏲ *This symbol denotes a product that is engineered to reduce installation and rework time.*

Z1950 12″ [305 MM] DIAMETER A.R.E. SANI-FLOR RECEPTOR WITH 8″ [203 MM] SUMP DEPTH

ENGINEERING SPECIFICATION

Zurn Z1950 Sani-Flor receptor features 12″ [305 mm] diameter x 8″ [203 mm] deep cast iron body, and round slotted, light-duty grate with white acid resisting porcelain enamel interior and top – complete with white ABS anti-splash interior bottom dome strainer.

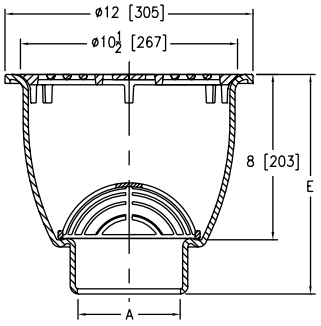

Dimensions in inches [mm]			Approximate Weight lb [kg]	Grate Open Area sq in [cm²]
A Pipe Size/ Outlet Type	E Body Height Dimensions			
	Z	ZN		
Inside Caulk (IC)				
3IC, 4IC	10-5/8 [270]	11 [279]	34 [15]	22 [142]
No-Hub (NH)				
2NH, 3NH, 4NH	10-5/8 [270]	11 [279]	34 [15]	22 [142]
Neo-Loc (NL)				
2NL, 3NL, 4NL	10 [254]	10-3/8 [264]	34 [15]	22 [142]

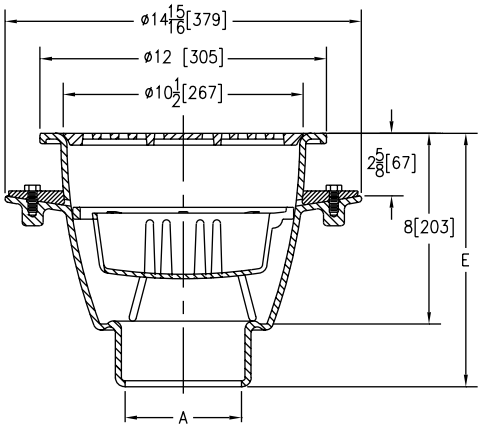

-KC-23 Options Shown

Z1950-KC-23 Sani-Flor Receptor, 12″ diameter x 8″ deep cast iron body and round slotted light-duty grate with white acid resisting porcelain enamel interior and top with seepage flange with seepage holes and clamp collar (-KC) and aluminum bucket (-23).

PREFIXES	DESCRIPTION	A PIPE SIZE	Z (A.R.E.)	ZN (N.B.)
Z1950*	Cast Iron Body with White A.R.E. Interior and Top	2″, 3″, 4″	**2,430.00**	**–**
ZN1950	Cast Iron Body with White A.R.E. Interior and Top, 12-1/2″ [318 mm] Round N.B. Frame, and Full Grate with 1/2″ [13 mm] Square Openings	2″, 3, 4″	**–**	**2,673.00**
OUTLETS (SPECIFY PIPE SIZE IN INCHES AND TYPE OF OUTLET)				
OUTLET TYPE		**PIPE SIZE/ OUTLET TYPE**		**ADD**
IC	Inside Caulk	3IC, 4IC	**N/C**	**N/C**
NH	No-Hub	2NH, 3NH, 4NH	**N/C**	**N/C**
NL	Neo-Loc	2NL, 3NL, 4NL	**N/C**	**N/C**
				ADD
SUFFIXES			**Z (A.R.E.)**	**ZN (N.B.)**
–K	Anchor Flange		**385.00**	**385.00**
–KC	Anchor Flange with Seepage Holes and Clamp Collar		**471.00**	**471.00**
–LD	Less Bottom Dome Strainer		**N/C**	**N/C**
–P	1/2″ Trap Primer Connection (See Z1023)		**170.00**	**170.00**
◷ **–TC**	Neo-Loc Test Cap Gasket (2″, 3″, 4″ [51 mm-102 mm] NL Bottom Outlet Only)		**116.00**	**116.00**
–1	Less Grate		**N/C**	**N/C**
–2	1/2 Grate		**N/C**	**N/C**
–3	3/4 Grate		**N/C**	**N/C**
–4	Full Grate with Center Opening		**158.00**	**158.00**
–6	Grate with 6″ [152 mm] Dia. x 6″ [152 mm] High Funnel		**439.00**	**569.00**
–8	Grate with 8-7/8″ x 3-5/8″ x 3-3/4″ [225 mm x 92 mm x 95 mm] High Oval Funnel		**477.00**	**797.00**
–11	Vandal-Proof Secured Grate (ZN only)		**N/A**	**90.00**
–15	Solid Loose Set Cover		**101.00**	**173.00**
–23	Aluminum Bucket		**226.00**	**226.00**
–25	White A.R.C. Bucket		**544.00**	**544.00**
–31	Stainless Steel Mesh Liner for Bucket		**471.00**	**471.00**
–32	Aluminum Dome Strainer		**N/C**	**N/C**
–33	White A.R.C. Anti-Splash Bottom Dome Strainer		**314.00**	**314.00**

**Regularly furnished unless otherwise specified.*

◷ *This symbol denotes a product that is engineered to reduce installation and rework time.*

For additional product information, please visit www.zurn.ca

Z1960 8″ [203 MM] DIAMETER A.R.E. SANI-FLOR RECEPTOR WITH 6″ [152 MM] SUMP DEPTH

ENGINEERING SPECIFICATION

Zurn Z1960 Sani-Flor receptor features 8″ [203 mm] diameter x 6″ [152 mm] deep cast iron body and square hole, light-duty grate with white acid resisting porcelain enamel interior and top – complete with white ABS anti-splash interior bottom dome strainer.

NOTE

†Add 9/16″ to 8″ [203 mm] dimension when specifying ZN1960.

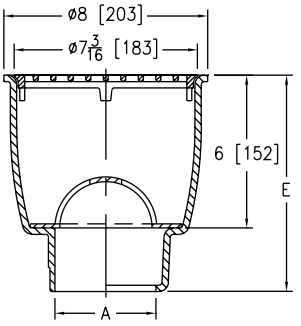

Dimensions in inches [mm]			Approximate Weight lb [kg]	Grate Open Area sq in [cm²]
A Pipe Size/ Outlet Type	E Body Height Dimensions			
	Z	ZN		
Inside Caulk (IC)				
3IC, 4IC	8-1/2 [216]	9 [229]	25 [11]	14 [6]
No-Hub (NH)				
2NH, 3NH, 4NH	8-1/2 [216]	9 [229]	25 [11]	14 [6]
Neo-Loc (NL)				
2NL, 3NL, 4NL	8 [203]	8-7/16 [214]	25 [11]	14 [6]

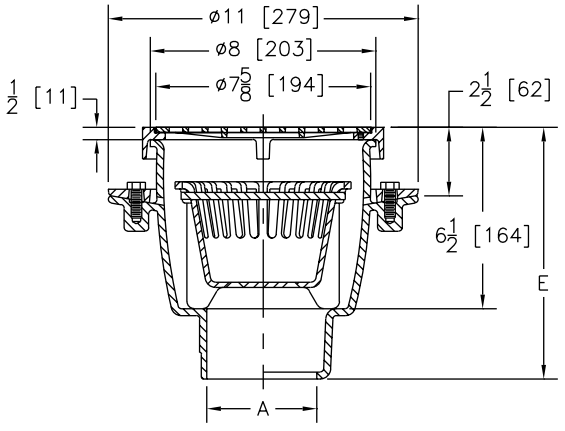

-T-KC-23 Options Shown

ZN1960-T-KC-23 Sani-Flor Receptor, 8-1/2″ square frame x 7-5/8″ round light-duty grate with 1/4″ openings (-T) x 6-1/2″ deep cast iron body with white acid resisting porcelain enamel interior and nickel bronze frame and grate with seepage flange with seepage holes and clamp collar (-KC) and aluminum bucket (-23).

PREFIXES	DESCRIPTION	A PIPE SIZE	Z (A.R.E.)	ZN (N.B.)
Z1960*	Cast Iron Body with White A.R.E. Interior and Top	2″, 3″, 4″	**1,557.00**	**–**
ZN1960†	Cast Iron Body with White A.R.E. Interior and Top, 8-1/2″ [216 mm] Round N.B. Frame, and Full Grate with 1/2″ [13 mm] Square Openings	2″, 3, 4″	**–**	**1,714.00**
OUTLETS (SPECIFY PIPE SIZE IN INCHES AND TYPE OF OUTLET)				
OUTLET TYPE		**PIPE SIZE/ OUTLET TYPE**		**ADD**
IC	Inside Caulk	3IC, 4IC	**N/C**	**N/C**
NH	No-Hub	2NH, 3NH, 4NH	**N/C**	**N/C**
NL	Neo-Loc	2NL, 3NL, 4NL	**N/C**	**N/C**
				ADD
SUFFIXES			**Z (A.R.E.)**	**ZN (N.B.)**
–K	Anchor Flange		**273.00**	**273.00**
–KC	Anchor Flange with Seepage Holes and Clamp Collar		**461.00**	**461.00**
–LD	Less Bottom Dome Strainer		**N/C**	**N/C**
–P	1/2″ Trap Primer Connection (See Z1023)		**170.00**	**170.00**
–T	Square Frame and Round Grate with 1/4″ [6 mm] Square Openings (ZN only)		**N/A**	**244.00**
⏲ **–TC**	Neo-Loc Test Cap Gasket (2″, 3″, 4″ [51 mm-102 mm] NL Bottom Outlet Only)		**116.00**	**116.00**
–1	Less Grate		**N/C**	**N/C**
–2	1/2 Grate		**N/C**	**N/C**
–3	3/4 Grate		**N/C**	**N/C**
–4	Full Grate with Center Opening		**158.00**	**158.00**
–6	Grate with 6″ [152 mm] Dia. x 6″ [152 mm] High Funnel		**439.00**	**569.00**
–8	Grate with 8-7/8″ x 3-5/8″ x 3-3/4″ [225 mm x 92 mm x 95 mm] High Oval Funnel		**477.00**	**797.00**
–11	Vandal-Proof Secured Grate (ZN only)		**N/A**	**90.00**
–15	Solid Loose Set Cover		**101.00**	**173.00**
–23	Aluminum Bucket		**193.00**	**193.00**
–25	White A.R.C. Bucket		**471.00**	**471.00**
–31	Stainless Steel Mesh Liner for Bucket		**471.00**	**471.00**
–32	Aluminum Dome Strainer		**N/C**	**N/C**
–33	White A.R.C. Anti-Splash Bottom Dome Strainer		**314.00**	**314.00**

For additional product information, please visit www.zurn.ca

**Regularly furnished unless otherwise specified.*

⏲ *This symbol denotes a product that is engineered to reduce installation and rework time.*

Z1970 9″ [229 MM] DIAMETER SHALLOW A.R.C. SANI-FLOR RECEPTOR WITH 3″ [76 MM] SUMP DEPTH

ENGINEERING SPECIFICATION

Zurn Z1970 Sani-Flor receptor features 9″ [229 mm] diameter x 3″ [76 mm] deep cast iron body and round slotted, medium-duty grate with white acid resisting epoxy coated interior and top – complete with brass secondary strainer.

NOTE

†Add 11/16″ [18 mm] to 9″ [229 mm] dimension when specifying ZN1970.

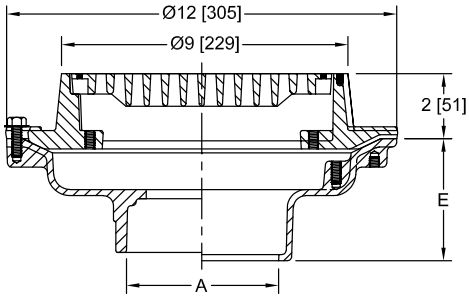

Dimensions in inches [mm]			Approximate Weight lb [kg]	Grate Open Area sq in [cm²]
A Pipe Size/ Outlet Type	E Body Height Dimensions			
	Z	ZN		
No-Hub (NH)				
2NH, 3NH, 4NH	5-3/4 [146]	6 [152]	14 [6]	18 [116]
Neo-Loc (NL)				
2NL, 3NL, 4NL	4-7/8 [124]	5-1/8 [130]	14 [6]	18 [116]

PREFIXES	DESCRIPTION	A PIPE SIZE	Z (A.R.C.)	ZN (N.B.)
Z1970*	Cast Iron Body with White A.R.C. Interior and Top	2″, 3″, 4″	1,509.00	–
ZN1970†	Cast Iron Body with White A.R.C. Interior and Top, 9″ [229 mm] Round N.B. Frame, and Full Slotted Grate	2″, 3, 4″	–	1,660.00

OUTLETS (SPECIFY PIPE SIZE IN INCHES AND TYPE OF OUTLET)				
OUTLET	TYPE	PIPE SIZE/ OUTLET TYPE		ADD
NH	No-Hub	2NH, 3NH, 4NH	N/C	N/C
NL	Neo-Loc	2NL, 3NL, 4NL	N/C	N/C

SUFFIXES		Z (A.R.C.)	ADD ZN (N.B.)
–KC	Anchor Flange with Seepage Holes and Clamp Collar	286.00	286.00
–P	1/2″ Trap Primer Connection (See Z1023)	170.00	170.00
◷ –TC	Neo-Loc Test Cap Gasket (2″, 3″, 4″ [51 mm-102 mm] NL Bottom Outlet Only)	116.00	116.00
–2	1/2 Grate	N/C	N/C
–3	3/4 Grate	N/C	N/C
–4	Full Grate with Center Opening	158.00	158.00
–5	Grate with 4″ [102 mm] Dia. x 3-3/4″ [95 mm] High Funnel	340.00	381.00
–7	Grate with 6-3/4″ x 3″ x 1″ [171 mm x 76 mm x 19 mm] High Oval Funnel	343.00	381.00
–11	Vandal-Proof Secured Grate	138.00	138.00
–25	White A.R.C. Bucket	226.00	226.00
–31	Stainless Steel Mesh Liner for Bucket	305.00	305.00

**Regularly furnished unless otherwise specified.*

◷ This symbol denotes a product that is engineered to reduce installation and rework time.

For additional product information, please visit www.zurn.ca

Z1982 12" X 12" [305 MM] STAINLESS STEEL SANI-FLOR CAN WASH DRAIN WITH 8" [203 MM] SUMP DEPTH

ENGINEERING SPECIFICATION

Zurn Z1982 Sani-Flor can wash drain features 12" x 12" x 8" [305 mm x 305 mm x 203 mm] deep fabricated stainless steel body, bottom outlet, anchor pan, medium-duty, loose set grate, and standing sediment bucket. Comes complete with chrome-plated bronze spray nozzle and water supply assembly.

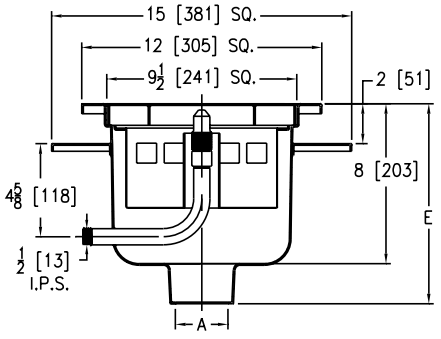

PREFIXES	DESCRIPTION	A PIPE SIZE	LIST PRICE
Z1982*	All Type 304 Stainless Steel	3", 4"	4,220.00
OUTLETS (SPECIFY PIPE SIZE IN INCHES AND TYPE OF OUTLET)			
OUTLET	TYPE	PIPE SIZE/OUTLET TYPE	ADD
NH	No-Hub	3NH, 4NH	N/C
SUFFIXES			ADD
–C	Clamp Collar		193.00
–WB	Water Supply Control Box (See Z1464)		-
–11	Vandal-Proof Secured Grate		532.00
–31	Stainless Steel Mesh Liner for Bucket		471.00

Dimensions in inches [mm]		Approximate Weight lb [kg]	Grate Open Area sq in [cm²]
A Pipe Size/ Outlet Type	E Body Height Dimensions		
No-Hub (NH)			
3NH, 4NH	10 [254]	45 [20]	20 [129]

Z1995 24" X 16" [610 MM X 406 MM] A.R.C. SANI-FLOR RECEPTOR WITH 17" [432 MM] SUMP DEPTH

ENGINEERING SPECIFICATION

Zurn Z1995 Sani-Flor receptor features 24" x 16" x 17" [610 mm x 406 mm x 432 mm] deep, white acid resisting epoxy coated interior, fabricated steel body, integral anchor flange, and rectangular square holed, heavy-duty grate – complete with stainless steel anti-splash interior bottom dome strainer.

NOTE

†Add 3/8" [10 mm] to 15-3/4" x 23-3/4" [400 mm x 603 mm] and 3/16" [5 mm] to 'E' dimensions when specifying ZN1995.

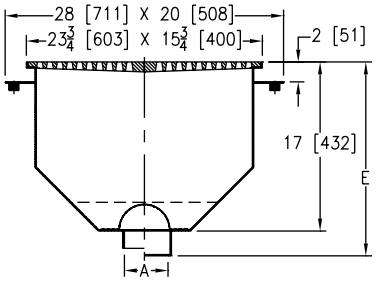

PREFIXES	DESCRIPTION	A PIPE SIZE	Z (A.R.C.)	ZN (N.B.)
Z1995*	Fabricated Steel Body with White A.R.C. Interior	3", 4", 6"	11,446.00	–
ZN1995†	Fabricated Steel Body with White A.R.C. Interior, 16-1/8" x 24-1/8" [410 mm x 613 mm] N.B. Frame and Full Grate with 1/4" [6 mm] Square Openings	3", 4", 6"	–	12,593.00
OUTLETS (SPECIFY PIPE SIZE IN INCHES AND TYPE OF OUTLET)				
OUTLET	TYPE	PIPE SIZE/ OUTLET TYPE		ADD
NH	No-Hub	3NH, 4NH, 6 NH	N/C	N/C
				ADD
SUFFIXES			Z (A.R.C.)	ZN (N.B.)
–KC	Anchor Flange with Seepage Holes and Clamp Collar		561.00	561.00
–P	1/2" [13 mm] Trap Primer Connection (See Z1023)		374.00	374.00
–2	1/2 Grate		N/C	N/C
–3	3/4 Grate		N/C	N/C
–6	Grate with 6" [152 mm] Dia. x 6" [152 mm] High Funnel		439.00	569.00
–25	White A.R.C. Bucket		1,199.00	1,199.00

Dimensions in inches [mm]			Approximate Weight lb [kg]	Grate Open Area sq in [cm²]
A Pipe Size/ Outlet Type	E Body Height Dimensions			
	Z	ZN		
No-Hub (NH)				
3NH, 4NH, 6NH	18-3/4 [476]	19 [483]	250 [113]	70 [452]

TECHNICAL INFORMATION

TECHNICAL INFO - ZURN OUTLET PIPE CONNECTIONS	**362**
TECHNICAL INFO - TOP LOADING CLASSIFICATION	**363**
TECHNICAL INFO - ZURN MATERIALS AND FINISHES	**364**
GENERAL TERMS AND CONDITIONS	**370**

TECHNICAL INFO - ZURN OUTLET PIPE CONNECTIONS

INSIDE CAULK (IC)

Often specified where drain body is positioned on pipe, bottom of outlet is sealed with oakum and connection is then completed according to local plumbing codes.

INSIDE GASKET (IG)

The IG connections utilize an inside caulk drain body and a Zurn "Sealtrol" gasket. This connection is only recommended for basement or ground floor applications.

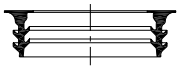

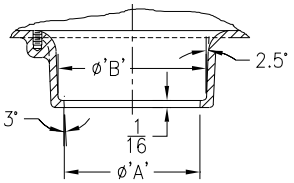

I.C. with Sealtrol Gasket (IG) Inside Caulk (IC)

OUTLETS	'A'	'B'	'C'
2. [51] I.C. Outlet	2-5/8 [67]	3-1/16 [78]	–
3. [76] I.C. Outlet	3-3/4 [95]	4-3/16 [106]	–
4. [102] I.C. Outlet	4-3/4 [121]	5-3/16 [132]	–
5. [127] I.C. Outlet	5-3/4 [146]	6-3/16 [157]	–
6. [152] I.C. Outlet	6-3/4 [172]	7-3/16 [183]	–
8. [203] I.C. Outlet	8-7/8 [226]	9-1/2 [241]	–

IRON PIPE (IP)

Zurn Iron Pipe Threaded connection is an old industry standard. The female (NPT) threaded outlet is often specified on industrial and institutional applications.

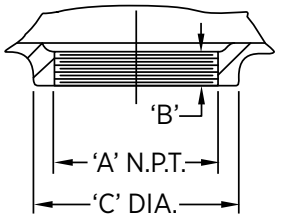

I.P. (Threaded/N.P.T.)

OUTLETS	'A'	'B'	'C'
2. [51] N.P.T. Outlet	2 [51]	9/16 [14]	3-1/4 [83]
3. [76] N.P.T. Outlet	3 [76]	3/4 [19]	4-1/2 [114]
4. [102] N.P.T. Outlet	4 [102]	15/16 [24]	5-5/8 [143]
5. [127] N.P.T. Outlet	5 [127]	15/16 [24]	6-11/16 [170]
6. [152] N.P.T. Outlet	6 [152]	1 [25]	7-3/4 [197]
8. [203] N.P.T. Outlet	8 [203]	1-1/8 [29]	9-3/8 [238]

NO-HUB (NH)

The most widely used connection. A No-Hub connection is achieved by butting No-Hub soil pipe or plastic pipe to the bottom of drain and securing it with a NH joint clamp. (Clamp furnished by others.)

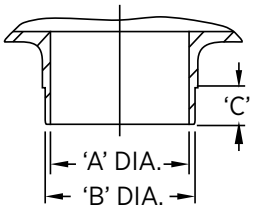

No-Hub (NH)

OUTLETS	'A'	'B'	'C'
2. [51] No-Hub Outlet	2 [51]	2-3/8 [60]	1-9/16 [40]
3. [76] No-Hub Outlet	3 [76]	3-3/8 [86]	1-9/16 [40]
4. [102] No-Hub Outlet	4 [102]	4-3/8 [111]	1-9/16 [40]
5. [127] No-Hub Outlet	4-15/16 [126]	5-5/16 [135]	2-1/16 [52]
6. [152] No-Hub Outlet	5-15/16 [151]	6-5/16 [160]	2-1/16 [52]
8. [203] No-Hub Outlet	8 [203]	8-3/8 [213]	2-1/16 [52]
10. [254] No-Hub Outlet	10 [254]	10-9/16 [268]	2-1/16 [52]
12. [305] No-Hub Outlet	12 [305]	12-9/16 [319]	2-1/16 [52]

NEO-LOC (NL)

Zurn Neo-Loc is a unique labor-saving compression gasketed connection designed to simply push on the stub end of the pipe. The Neo-Loc drain body and gasket can be utilized with plastic, steel, No-Hub and service weight soil pipe. A unique pipe stop cast in each Zurn Neo-Loc drain body ensures a proper fit.

Note: Not recommended for roof drain applications due to the watertight integrity of the Neo-Loc connection to the leader pipe being dependent upon adequate leader pipe support and accurate perpendicularity of leader pipe into Neo-Loc gasket.

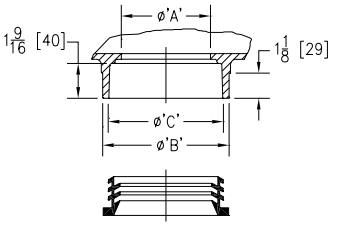

"Neo-Loc" (NL)

OUTLETS	'A'	'B'	'C'
2. [51] Neo-Loc Outlet	2 [51]	3-3/8 [86]	3 [76]
3. [76] Neo-Loc Outlet	3 [76]	4-3/8 [111]	4 [102]
4. [102] Neo-Loc Outlet	4 [102]	5-1/2 [140]	5-1/8 [130]
2. [51] NL w/-TC	2 [51]	3-3/8 [86]	3 [76]
3. [76] NL w/-TC	3 [76]	4-3/8 [111]	4 [102]
4. [102] NL w/-TC	4 [102]	5-1/2 [140]	5-1/8 [130]

Special Note: Zurn "Neo-Loc" and "Sealtrol" gaskets are designed for use exclusively with Zurn drainage products. They are not sold separately and all warranties either expressed or implied would be forfeited if used in other than a Zurn drainage product.

TECHNICAL INFO - TOP LOADING CLASSIFICATION

Selection of a Zurn Floor Drain should be based on the load factor and the anticipated traffic. Many of Zurn's cast iron grates may be furnished in Duresist iron when increased working load requirements are necessary. Specify Duresist grate (-DG) when required or contact your Zurn representative when special applications are necessary.

Zurn drains are rated as follows: (Reference ASME Standard A112.6.3M)

6.1 – LOADING CLASSIFICATIONS

Grates and top rims shall be designed to meet the following loading classifications.

6.1.1 – LIGHT DUTY

All grates having safe live load (as calculated in para. 6.2.5) under 2000 lb. [900 kg].

6.1.2 – MEDIUM DUTY

All grates having safe live load (as calculated in para. 6.2.5) between 2000 lb. [900 kg] and 4999 lb. [2250 kg].

6.1.3 – HEAVY DUTY

All grates having safe live load (as calculated in para. 6.2.5) between 5000 lb. [2250 kg] and 7499 lb. [3375 kg].

6.1.4 – EXTRA HEAVY DUTY

All grates having safe live load (as calculated in para. 6.2.5) between 7500 lb. [3375 kg] and 10,000 lb. [4500 kg].

6.1.5 – SPECIAL DUTY

Grates having safe live load (as calculated in para. 6.2.5) over 10,000 lb. [4500 kg] shall be considered special and treated accordingly.

6.2 – TEST PROCEDURE FOR GRATE LOADING

Live Load – Requirements listed in 6.1 through 6.1.5 shall be determined as follows:

6.2.1 – LOAD CLASSIFICATIONS

Load classifications as stated in 6.1 shall be determined by laboratory tests.

6.2.2 – PLATEN SIZE

A 3.5 in. [89 mm] diameter platen shall be applied to the center of the grate specimen.

6.2.3 – LOADING

Loading shall be applied slowly so that point of failure can be observed.

6.2.4 – POINT OF FAILURE

(a) Brittle Materials (Cast Iron). The load (in pounds or kilograms) at which the first fracture on any part of the specimen appears.

(b) Ductile Material. The load which the permanent set (at the point of loading) is greater than 2% of the longest transverse dimension of the specimen.

6.2.5 – GRATE CLASSIFICATION

The maximum safe live load is computed by dividing the load at failure by two.

†Safe live load rating of grates is for general classification purposes only.
For the actual safe live load of any given grate, contact your Zurn representative.

Note: ZB and ZN 400 Series drain head assemblies are rated for light-duty applications only.

TECHNICAL INFO - ZURN MATERIALS AND FINISHES

ZURN CAST IRON

Conforms to ASTM Specification for Gray Iron Castings A48, Class 25. It is produced utilizing the latest equipment and newest developed foundry techniques. Zurn cast iron castings are characterized by a high degree of strength, corrosion-resistance, workmanship, and finish.

ZURN DURESIST

A ductile iron complying with ASTM Specification A536, Grade 60-45-10. Its physical properties make it ideal for grates and drain components that are subjected to severe and heavy duty service. Its chemical characteristics make possible a degree of corrosion-resistance far superior to that of cast iron. Zurn Duresist exhibits remarkable stress qualities, possessing a yield strength in the same range as that of cast carbon steel, while its ability to absorb the shock loading of traffic areas is unequaled, making its use ideal for all areas where extra heavy duty service is a requirement – whether indoors or outdoors – in chemical and metal processing plants or other industrial applications.

ZURN DURA-COAT

A specially formulated paint designed to resist cracking and chipping. Dura-Coat is a latex-based coating developed to be used with cast iron substrate. Dura-Coat is designed, per ASME standards, to protect the product "during normal handling and warehousing prior to installation".

ZURN GALVANIZED CAST IRON

A process of applying heavy zinc coating to a thoroughly cleaned iron casting. This coating contains 95% zinc. Zurn galvanizing can be supplied on all cast iron parts. It increases longevity and is recommended wherever the discoloration caused by oxidation of cast iron is objectionable. Galvanize should be used in industrial areas where corrosive atmosphere may be encountered.

CADMIUM PLATED CAST IRON

A process of applying a heavy cadmium coating to a thoroughly cleaned iron casting. This coating contains 95% cadmium in a cold applied process. Cadmium plating can be supplied on all cast iron parts. It increases longevity and is recommended wherever the discoloration caused by oxidation of cast iron is objectionable.

PROPERTIES OF BASIC DUCTILE VERSUS CAST IRON

METAL	CAST IRON	DUCTILE IRON
Specification	Class 25	60-45-10
Tensile Strength (PSI)	25/30,000	60/80,000
Yield Strength (PSI)	NIL	45/60,000
Elongation	NIL	10% to 25%
Modules of Elasticity	16 x 10	24 x 10

ZURN BRONZE

A semi-red brass conforming to ASTM Specification for Copper Alloy Sand Casting B584, Copper Alloy No. 844. The exposed surface is normally supplied possessing a satin sheen texture which allows it to blend unobtrusively with surrounding finishes. When the application requires, Zurn Bronze can be polished to a high gloss.

ZURN NICKEL BRONZE

A unique material that is ideally suited to traffic-bearing grates and strainers in finished floor areas. It affords the combined advantage of greater strength, better appearance, and longer service life at the same price as chrome plated brass. Superior ductility and shock resistance are the result of a copper nickel alloy (Copper Alloy 997) having a wearing surface similar in appearance to satin chrome plate; however, because it does not have a plated surface it cannot chip, peel, crack, or wear off. It is highly resistant to corrosion; however, the process of oxidation will naturally occur over time with most metals. Methods have been developed to prevent, preserve, and restore metals affected by oxidation.

CHROME PLATED BRONZE

Ideal for installation in walls, gutters, and other areas where a bright decorative finish is desired, and is not subject to the abrasive action of foot and other traffic. It is not recommended for installations where the abrasion will eventually wear through and cause peeling. It should always be specified for swimming pool fittings due to its high resistance to the halogens (chlorine, etc.), encountered in swimming pool sanitation.

ALUMINUM

Casting grade 319. This is an alloy containing both silicon and copper. It is a solid cast metal in a pleasing light gray color. The light weight, coupled with its exceptional strength and corrosion resistance, makes it ideal for drain components such as sediment buckets and strainers. When used with acid-resisting porcelain enamel coated drains, the possibility of chipping is minimized.

ZURN STAINLESS STEEL

Castings are normally produced in Type CF8 (304) which is an 18-8 Austenitic Stainless possessing excellent corrosion resistant qualities. For some applications where conditions demand, Type CF8M (316) stainless steel can be supplied. Items formed from stainless steel sheet and other stainless steel products are regularly furnished in Type 304 with 316 as an optional material.

A.R.C.

Acid Resisting Epoxy Coating is a baked-on powder coating, which produces a smooth, hard, high gloss finish. This epoxy based coating offers high impact resistance and excellent life expectancy in all drainage applications.

A.R.E.

Acid Resisting Porcelain Enamel is a substantially vitreous or glassy inorganic coating bonded to metal by fusion at a high temperature above 800°F. This coating offers excellent acid, abrasion, and wear resistance. The coating is extremely hard and is the ultimate for sanitation in drainage applications. Zurn A.R.E. coating conforms to the requirements of F.D.A. (Food and Drug Administration) Regulation 21-CFR5 117.1360.

ALPHANUMERIC INDEX

A PERFECT FIT: Z1322XL-EZ AND Z1332XL-EZ ECOLOTROL™ WALL HYDRANTS 15
EZ HYDRANTS: Z1327-EZ, Z1350-EZ, Z1320XL-EZ 16
STABILIZER SOLUTIONS 9
Z130 SIPHONIC ROOF DRAIN WITH DECK PLATE 12
Z131 14-9/32" [363 MM] DIAMETER SIPHONIC OVERFLOW ROOF DRAIN 43
Z163 15" [381 MM] DIAMETER COMBINATION MAIN ROOF AND OVERFLOW DRAIN WITH LOW SILHOUETTE DOMES AND DOUBLE TOP-SET® DECK PLATE 48
Z164 12" [305 MM] DIAMETER COMBINATION MAIN ROOF AND OVERFLOW DRAIN WITH LOW SILHOUETTE DOMES AND DOUBLE TOP-SET® DECK PLATE 49
Z165 8-3/8" [203 MM] DIAMETER COMBINATION MAIN ROOF AND OVERFLOW DRAIN WITH LOW SILHOUETTE DOMES AND DOUBLE TOP-SET® DECK PLATE 50
Z250H FOG-CEPTOR® INTERCEPTOR 7
Z400-18 LEVELING RING 87
Z400-SR FLOOR DRAIN STABILIZER RING 87
Z415B-DP BODY ASSEMBLY W/ "TYPE B" STRAINER AND DECK PLATE 95
Z415-BZ1 BODY ASSEMBLY W/ "TYPE B" STRAINER AND EZ1™ TECHNOLOGY 91
Z415-BZ1-DP BODY ASSEMBLY W/ "TYPE B" STRAINER, DECK PLATE AND EZ1™ TECHNOLOGY 93
Z415S-DP BODY ASSEMBLY W/ "TYPE S" STRAINER AND DECK PLATE 96
Z415-SZ1 BODY ASSEMBLY W/ "TYPE S" STRAINER AND EZ1™ TECHNOLOGY 92
Z415-SZ1-DP BODY ASSEMBLY W/ "TYPE S" STRAINER, DECK PLATE AND EZ1™ TECHNOLOGY 94
Z499B ROUND PROTECTIVE COVER FOR FLOOR DRAINS 89
Z499S SQUARE PROTECTIVE COVER FOR FLOOR DRAINS 89
Z1035 FLOOR DRAIN INSTALLATION STABILIZER 180
Z1035-Q STRUCTURAL DECK DRAIN STABILIZER 180
Z1036 FLOOR DRAIN INSTALLATION STABILIZER 181
Z1201-H EZCARRY® ADJUSTABLE HORIZONTAL HIGH PERFORMANCE SIPHON JET – HUB AND SPIGOT SERIES 232
Z1201-N EZCARRY® ADJUSTABLE HORIZONTAL HIGH PERFORMANCE SIPHON JET – NO-HUB SERIES 230
Z1202-H EZCARRY® ADJUSTABLE VERTICAL HIGH PERFORMANCE SIPHON JET – HUB AND SPIGOT SERIES 244
Z1202-N EZCARRY® ADJUSTABLE VERTICAL HIGH PERFORMANCE SIPHON JET – NO-HUB SERIES 242
Z1222-CB CARRIER BANK 19
Z1231EZ UNIVERSAL LAVATORY CARRIER 10
Z1231EZ UNIVERSAL LAVATORY CARRIER – WALL LAVATORIES 275
Z1320XL-EZ ECOLOTROL CERAMIC DISC WALL HYDRANT – ENCASED, NON-FREEZE, ANTI-SIPHON, AUTOMATIC DRAINING 289
Z1322XL-EZ ECOLOTROL CERAMIC DISC WALL HYDRANT – EXPOSED, NON-FREEZE, ANTI-SIPHON, AUTOMATIC DRAINING 290
Z1327-EZ NARROW WALL HOT/COLD HYDRANT WITH MOUNTING BRACKETS – ENCASED, MODERATE CLIMATE 291
Z1332XL-EZ ECOLOTROL CERAMIC DISC WALL HYDRANT – ENCASED, ANTI-SIPHON, AUTOMATIC DRAINING, MODERATE CLIMATE 292
Z1350-EZ NARROW WALL HYDRANT WITH MOUNTING BRACKETS – ENCASED, MODERATE CLIMATE 294
Z1400-BZ1 FLOOR CLEANOUT WITH "TYPE B" COVER AND EZ1™ TECHNOLOGY 303
Z1400-SZ1 BODY ASSEMBLY W/ "TYPE S" COVER AND EZ1™ TECHNOLOGY 304
Z1900-RL 12" X 12" X 6" [305 MM X 305 MM X 152 MM] REPLACEMENT FLOOR SINK LINER 346
Z1901-RL 12" X 12" X 8" [305 MM X 305 MM X 203 MM] REPLACEMENT FLOOR SINK LINER 348
Z1902-RL 12" X 12" X 10" [305 MM X 305 MM X 254 MM] REPLACEMENT FLOOR SINK LINER 350
Z1903 SANI-FLOR RECEPTOR INSTALLATION STABILIZER 350
Z1910-RL 8" X 8" X 6" [203 MM X 203 MM X 152 MM] REPLACEMENT FLOOR SINK LINER 352
ZE1201-H EZCARRY® ADJUSTABLE HORIZONTAL SIPHON JET WITH ELONGATED FITTING – HUB AND SPIGOT SERIES 238
ZE1201-N EZCARRY® ADJUSTABLE HORIZONTAL SIPHON JET WITH ELONGATED FITTING – NO-HUB SERIES 236
ZE1203-H ADJUSTABLE HORIZONTAL SIPHON JET WITH ELONGATED FITTING – HUB AND SPIGOT SERIES 256
ZE1203-N ADJUSTABLE HORIZONTAL SIPHON JET WITH ELONGATED FITTING – NO-HUB SERIES 254
ZF1201-N EZCARRY® HORIZONTAL SIPHON JET ONE-PIECE CARRIER – NO-HUB SERIES 240
ZF1202-N EZCARRY® VERTICAL SIPHON JET ONE-PIECE CARRIER – NO-HUB SERIES 248
ZN1201-N EZCARRY® ADJUSTABLE HORIZONTAL SIPHON JET – NO-HUB NARROW WALL SYSTEM (9-3/8" DEPTH FRONT TO BACK) 241
ZN1202-N EZCARRY® ADJUSTABLE VERTICAL SIPHON JET – NO-HUB NARROW WALL SYSTEM 249
ZURN TOP-SET® DECK PLATE 11
100C 15" [381 MM] DIAMETER DEEP SUMP DUAL OUTLET ROOF DRAIN - LOW SILHOUETTE DOME 28
ABBREVIATIONS USED IN THIS CUSTOMER GUIDE 21
CARRIER – APPLICATION INDEX 226
CARRIER – HOW TO SPECIFY 226
CARRIER – PRODUCT COMPLIANCE 226
CARRIER – TECHNICAL DATA 226
CARRIER – TECHNICAL DATA 227
CAST IRON EZ1™ NOMENCLATURE DECODER 65
CLEANOUTS – APPLICATION INDEX 302
CUSTOMER GUIDE INSTRUCTIONS 20
FLOOR DRAINS - APPLICATION INDEX 64
FLOOR DRAINS - GENERAL INFORMATION 64
GENERAL TERMS AND CONDITIONS 370
GREASE INTERCEPTORS – OPERATION 189
GREASE INTERCEPTORS – PURPOSE 188
GREEN ROOFING DRAINAGE SOLUTIONS 14
HYDRANTS - APPLICATION INDEX 286
INTERCEPTORS – APPLICATION INDEX 188
INTERCEPTORS – GENERAL INFORMATION 188
OIL INTERCEPTORS – APPLICATION INDEX 212
OIL INTERCEPTORS – GENERAL PRODUCT INFORMATION 212
ROOF DRAIN - APPLICATION INDEX 24
ROOF DRAIN - GENERAL INFORMATION 24
ROOF DRAIN - PRODUCT COMPLIANCE 24
SANI-FLOR RECEPTORS – MATERIAL SELECTION 344
SANI-FLOR RECEPTORS – OPTIONS AND VARIATIONS 344
SOLIDS INTERCEPTORS – APPLICATION INDEX 204
SOLIDS INTERCEPTORS – GENERAL PRODUCT INFORMATION 204
SOLIDS INTERCEPTORS – SIZING 204
STAINLESS STEEL DRAINS – APPLICATION INDEX 324
STAINLESS STEEL DRAINS – BUTT-WELD ENGINEERING DATA 324
TECHNICAL INFO - TOP LOADING CLASSIFICATION 363
TECHNICAL INFO - ZURN MATERIALS AND FINISHES 364
TECHNICAL INFO - ZURN OUTLET PIPE CONNECTIONS 362
TRAPS, PRIMERS, AND BACKWATER VALVES – APPLICATION INDEX 172
TRAPS, PRIMERS, AND BACKWATER VALVES – OPTIONS AND VARIATIONS 172
TYPICAL PRODUCT PAGE NAVIGATION 20
VP-DRIVER VANDAL-PROOF DRIVER 170
Z100 15" [381 MM] DIAMETER MAIN ROOF DRAIN WITH LOW SILHOUETTE DOME 26
Z100 Z100 FLOFORCE™ HIGH PERFORMANCE ROOF DRAIN - LOW SILHOUETTE DOME 25
Z101 HIGH CAPACITY 20" [508 MM] DIAMETER MAIN ROOF DRAIN WITH LOW SILHOUETTE DOME 27
Z104 15" [381 MM] DIAMETER DEEP SUMP ROOF DRAIN WITH LOW SILHOUETTE DOME 29
Z105 CONTROL-FLO™ ROOF DRAIN WITH PARABOLIC WEIR 30
Z107 20" [508 MM] WIDE DECK FLANGE ROOF DRAIN 31
Z108 15" [381 MM] DIAMETER DECK RECEPTOR DRAIN 32
Z110 15" [381 MM] GREEN ROOF DRAIN WITH PERFORATED SCREEN ASSEMBLY, AND REMOVABLE COVER WITH LIFT HANDLE 33
Z110-AI GREEN ROOF DRAIN WITH PERFORATED SCREEN ASSEMBLY, REMOVABLE COVER WITH LIFT HANDLE, AND AUXILIARY INLET 34
Z111 12" [305 MM] DIAMETER FLAT DECK ROOF DRAIN FOR METAL DECKS 36

ALPHANUMERIC INDEX

Z121 12" [305 MM] DIAMETER ROOF DRAIN LOW SILHOUETTE DOME **37**
Z122 12" [305 MM] DIAMETER DECK RECEPTOR DRAIN **39**
Z125 8-3/8" [203 MM] DIAMETER ROOF DRAIN LOW SILHOUETTE DOME **40**
Z127 8-1/2" [216 MM] DIAMETER DECK RECEPTOR DRAIN **41**
Z130 8" [203 MM] MAIN ROOF DRAIN **42**
Z135-6 8" [203 MM] MAIN ROOF DRAIN FOR CONVENTIONAL INVERTED PROMENADE DECK ROOF **43**
Z150 14" [356 MM] SQUARE TOP PROM-DECK DRAIN WITH HEEL-PROOF GRATE AND ROTATABLE FRAME **44**
Z154 12" [305 MM] SQUARE TOP PROM-DECK DRAIN WITH HEEL-PROOF GRATE AND ROTATABLE FRAME **45**
Z158 10" [254 MM] SQUARE TOP PROM-DECK DRAIN WITH HEEL-PROOF GRATE AND ROTATABLE FRAME **46**
Z160 135° SCUPPER DRAIN **47**
Z161 3" X 10" [76 MM X 254 MM] OBLIQUE SCUPPER DRAIN **47**
Z180 4-1/2" [114 MM] DIAMETER CORNICE DRAIN WITH BOTTOM OUTLET **50**
Z181 6" [152 MM] DIAMETER CORNICE DRAIN WITH BOTTOM OUTLET **51**
Z182 4-1/2" [114 MM] DIAMETER CORNICE DRAIN WITH 90° OUTLET **51**
Z185 6" [152 MM] DIAMETER CORNICE DRAIN WITH 90° OUTLET **52**
Z187 6" X 7" [152 MM X 178 MM] OR 8" X 12" [203 MM X 305 MM] OBLIQUE SCUPPER DRAIN **52**
Z189 5" X 6" X 11" [127 MM X 152 MM X 279 MM] SCUPPER DRAIN **53**
Z190 VERTICAL EXPANSION JOINT **53**
Z191 5" X 4" X 24" [127 MM X 102 MM X 610 MM] DOWNSPOUT BOOT **54**
Z191-RD 4" X 18" [127 MM X 457 MM] DOWNSPOUT BOOT **54**
Z192 4" X 3" [102 MM X 76 MM] DOWNSPOUT BOOT **55**
Z193 VANDAL-PROOF HOODED VENT CAP **55**
Z195 VENT STACK FLASHING SLEEVE **56**
Z196 VENT STACK FLASHING SLEEVE **56**
Z197 RISER SLEEVE **57**
Z198 PARAPET SCUPPER SLEEVE **57**
Z199-DC DOWNSPOUT COVER **60**
Z199 DOWNSPOUT NOZZLE **58**
Z211-A FLOOR DRAIN WITH ROUND STRAINER **66**
Z211 FLOOR DRAIN BODY ONLY **66**
Z250H FOG-CEPTOR® INTERCEPTOR **190**
Z300 THOROFLUSH DRAIN **70**
Z310 THOROFLUSH DRAIN **70**
Z315 VANDAL-PROOF ACCESS DRAIN **71**
Z319 THOROFLUSH DRAIN – LARGE CAPACITY **71**
Z320 REFRIGERATOR DRAIN **72**
Z325 INDIRECT WASTE FUNNEL WITH INTEGRAL BACKWATER VALVE **72**
Z326 INDIRECT WASTE FUNNEL **73**
Z328 FUNNEL CONVERTING ASSEMBLY **73**
Z329 FUNNEL CONVERTING ASSEMBLY **74**
Z349 TERRACE PLANTING AREA DRAIN **75**
Z350 PLANTING AREA DRAIN **75**
Z355 PRISON CELL FLOOR DRAIN **76**
Z400 "TYPE BL" ROUND STRAINER WITH DEX-O-TEX FLANGE **79**
Z400 "TYPE C" ROUND HINGED STRAINER **80**
Z400 "TYPE E" ROUND STRAINER WITH INTEGRAL FUNNEL **80**
Z400 "TYPE G" ROUND STRAINER WITH DOME **81**
Z400 "TYPE I" ROUND STRAINER WITH RAISED LIP **82**
Z400 "TYPE J" RECTANGULAR STRAINER WITH HEEL-PROOF SLOTTED OPENINGS **82**
Z400 "TYPE K" ANGULAR STRAINER **83**
Z400 "TYPE M" ROUND STRAINER WITH SLOTTED OPENINGS AND SUR-SET BUCKET **83**
Z400 "TYPE N" ROUND STRAINER WITH DEEP FLANGED GRATE **84**
Z400 "TYPE SC" SQUARE STRAINER WITH SOLID HINGED COVER **86**
Z400 "TYPE SH" SQUARE HINGED STRAINER **86**
Z400 "TYPE S" SQUARE STRAINER **85**
Z400 "TYPE Y" SQUARE STRAINER **88**
Z400-U ADJUSTABLE STRAINER EXTENSION **87**
Z414-1 3-1/2" X 9" [89 MM X 229 MM] OVAL FUNNEL **90**
Z414 4" [102 MM] ROUND FUNNEL **90**
Z415 BODY ASSEMBLY WITH "TYPE BL" STRAINER **104**
Z415 BODY ASSEMBLY WITH "TYPE C" STRAINER **105**
Z415 BODY ASSEMBLY WITH "TYPE E" STRAINER **106**
Z415 BODY ASSEMBLY WITH "TYPE G" STRAINER **107**
Z415 BODY ASSEMBLY WITH "TYPE H" STRAINER **109**
Z415 BODY ASSEMBLY WITH "TYPE I" STRAINER **110**
Z415 BODY ASSEMBLY WITH "TYPE J" HEEL-PROOF STRAINER **111**
Z415 BODY ASSEMBLY WITH "TYPE K" STRAINER **112**
Z415 BODY ASSEMBLY WITH "TYPE M" STRAINER AND SUR-SET BUCKET **113**
Z415 BODY ASSEMBLY WITH "TYPE N" STRAINER **114**
Z415 BODY ASSEMBLY WITH "TYPE SC" STRAINER **118**
Z415 BODY ASSEMBLY WITH "TYPE SH" STRAINER **119**
Z415 BODY ASSEMBLY WITH "TYPE S" STRAINER **116**
Z415 FLOOR DRAIN BODY WITH CLAMPING COLLAR **97**
Z415-U BODY ASSEMBLY WITH "TYPE U" HUB FUNNEL **120**
Z420 DEEP SHANK FLOOR AND SHOWER DRAIN FOR MARBLE AND GRANITE APPLICATIONS **123**
Z450 DRUM TRAP DRAIN WITH "TYPE B" STRAINER **124**
Z451 SHALLOW TRAP DRAIN WITH "TYPE B" STRAINER **125**
Z453 DEEP SEAL TRAP DRAIN WITH "TYPE B" STRAINER **126**
Z455 TRAP DRAIN WITH FLOOR CLEANOUT WITH "TYPE B" STRAINER **127**
Z456 DEEP SEAL TRAP DRAIN WITH FLOOR CLEANOUT AND CLAMP COLLAR WITH "TYPE B" STRAINER **128**
Z460B SHALLOW BODY FLOOR DRAIN WITH SIDE OUTLET AND "TYPE B" STRAINER **129**
Z461 6" [152 MM] SQUARE MODULAR NON-ADJUSTABLE FLOOR DRAIN WITH CLAMPING FRAME **130**
Z503 15-3/8" [391 MM] HEAVY-DUTY AREA DRAIN **130**
Z505 12-1/4" [311 MM] HEAVY-DUTY DRAIN **131**
Z507 7" [178 MM] MEDIUM-DUTY DRAIN **132**
Z508 9" [229 MM] EXTRA-HEAVY-DUTY DRAIN **133**
Z509 12-1/4" [311 MM] HEAVY-DUTY DRAIN **134**
Z511 9" [229 MM] HEAVY-DUTY DRAIN **135**
Z512 12-1/4" [311 MM] HEAVY-DUTY DRAIN **136**
Z513 9" [229 MM] SQUARE HINGED HEAVY-DUTY DRAIN **137**
Z520 9-1/4" [235 MM] ADJUSTABLE HEAVY-DUTY DRAIN **138**
Z521 12-1/4" [311 MM] DIAMETER ADJUSTABLE HEAVY-DUTY DRAIN **139**
Z526 12-1/4" [311 MM] ADJUSTABLE HEAVY-DUTY DRAIN **140**
Z530 9" [229 MM] MEDIUM-DUTY WIDE FLANGE DECK DRAIN **141**
Z531 9" [229 MM] ADJUSTABLE FRAME WIDE FLANGE MEDIUM-DUTY DECK DRAIN **141**
Z532 12-1/4" [311 MM] DIAMETER WIDE FLANGE HEAVY-DUTY FLOOR DRAIN **142**
Z533 9" [229 MM] DIAMETER HEAVY-DUTY PARKING DECK DRAIN WITH SUPPORT FLANGE **142**
Z534 12-1/4" [311 MM] DIAMETER HEAVY-DUTY PARKING DECK DRAIN WITH SUPPORT FLANGE **143**
Z535 HEAVY-DUTY PARKING STRUCTURE DRAIN **143**
Z536-8 8" [203 MM] DIAMETER HEAVY-DUTY ADJUSTABLE FLOOR DRAIN **144**
Z536 15-3/8" [391 MM] DIAMETER HEAVY-DUTY PARKING DECK DRAIN WITH SUPPORT FLANGE **144**
Z537 15-7/8" [403 MM] SQUARE TOP HEAVY-DUTY PARKING DECK DRAIN WITH SUPPORT FLANGE **145**
Z539 12-1/4" [311 MM] HEAVY-DUTY DRAIN WITH DEEP SUMP **145**
Z540 12-1/4" [311 MM] MEDIUM-DUTY DRAIN WITH SUR-SET BUCKET **146**
Z541 12-1/4" [311 MM] DIAMETER HEAVY-DUTY DRAIN **147**
Z545 16" [152 MM] DIAMETER HEAVY-DUTY DRAIN **148**
Z546 21-1/2" [546 MM] DIAMETER EXTRA HEAVY-DUTY DRAIN **149**
Z547 21" [533 MM] DIAMETER EXTRA HEAVY-DUTY HEEL-PROOF PARKING DECK DRAIN WITH SUPPORT FLANGE **149**
Z550 9" [229 MM] DIAMETER MEDIUM-DUTY DRAIN **150**
Z551 9" [229 MM] DIAMETER MEDIUM-DUTY DRAIN **151**

ALPHANUMERIC INDEX

Z554 9" [229 MM] MEDIUM-DUTY DRAIN WITH SUR-SET BUCKET 151
Z555 8" [203 MM] HEAVY-DUTY FLOOR DRAIN WITH DEEP ANTI-TILT GRATE 152
Z556 8" [203 MM] ADJUSTABLE HEAVY-DUTY DRAIN 153
Z566 12" [305 MM] SQUARE OPEN TOP DRAIN 154
Z575 6" X 12" [152 MM X 305 MM] MEDIUM-DUTY GUTTER DRAIN 154
Z609 9" [229 MM] SQUARE HEAVY-DUTY DRAIN 155
Z610 12-1/2" [318 MM] HEAVY-DUTY DRAIN 156
Z610-ADJ 12" [305 MM] SQUARE HEAVY-DUTY ADJUSTABLE DRAIN 157
Z611 9" [229 MM] MEDIUM-DUTY DRAIN 158
Z624 ISOLATION DECK DRAIN 159
Z625 ADJUSTABLE ISOLATION DECK DRAIN 159
Z627 HEAVY-DUTY ADJUSTABLE ISOLATION DECK DRAIN 160
Z629 VERTICAL WALL DRAIN WITH BACKWATER VALVE 161
Z645 12" X 12" [305 MM X 305 MM] EXTRA-HEAVY-DUTY DRAIN 161
Z662 16" [152 MM] HEAVY-DUTY DRAIN 162
Z662-HF 16" [152 MM] HEAVY-DUTY DRAIN WITH HIGH FLOW DUCTILE IRON GRATE 163
Z664 6" [152 MM] WIDE HEAVY-DUTY MODULAR TRENCH DRAIN 164
Z665 12" [305 MM] WIDE HEAVY-DUTY MODULAR TRENCH DRAIN 165
Z667 6" [152 MM] WIDE MEDIUM-DUTY MODULAR TRENCH DRAIN 166
Z668 11-1/4" X 19-1/4" [279 MM X 483 MM] HEAVY-DUTY DRAIN 166
Z673 29" X 30" [737 MM X 762 MM] EXTRA HEAVY-DUTY DRAIN 167
Z675 13-1/2" [343 MM] EXTRA HEAVY-DUTY DRAIN 167
Z676 13-1/2" [343 MM] EXTRA HEAVY-DUTY DRAIN 168
Z730 9" [229 MM] TOP MEDIUM-DUTY DRAIN 168
Z742 LIGHT-DUTY TRAP DRAIN 169
Z1000 DEEP SEAL TRAP 174
Z1019 FUNNEL DRAIN WITH "P" TRAP 174
Z1020XL ELECTRONIC TRAP PRIMER 175
Z1021 WATER SAVER TRAP PRIMER WITH 1-1/2" [38 MM] COPPER SWEAT WALL CONNECTION 175
Z1022-XL LEAD-FREE SANI-GARD AUTOMATIC TRAP PRIMER 176
Z1023 TRAP PRIMER CONNECTION ADAPTER 176
Z1024 FIXED AIR GAP 177
Z1025 FIXED AIR GAP 177
Z1030 HUB ADAPTER 178
Z1032 INSIDE CAULK REDUCER 178
Z1033 FEMALE PIPE THREAD REDUCER 179
Z1034 FEMALE PIPE ECCENTRIC REDUCER 179
Z1040 NO-HUB ADAPTER 181
Z1042 ELBOW ADAPTER 182
Z1072 ZSHIELD™ BARRIER TRAP SEAL DEVICE FOR FLOOR DRAINS 173
Z1088 BACKWATER VALVE GATE TYPE 182
Z1090 BACKWATER VALVE FLAPPER TYPE 183
Z1091 BACKWATER VALVE FLAPPER TYPE 183
Z1095-15 BACKWATER VALVE WITH FLOOR LEVEL CLEANOUT 184
Z1095 BACKWATER VALVE FLAPPER TYPE 184
Z1099 BACKWATER VALVE BALL FLOAT TYPE 185
Z1165 100 PPM GREASE INTERCEPTOR SYSTEM WITH SOLIDS INTERCEPTOR 191
Z1170 GREASE INTERCEPTOR 192
Z1170-UN GREASE INTERCEPTOR WITH USER NOTIFICATION SYSTEM 194
Z1171 LOW PROFILE GREASE INTERCEPTOR 196
Z1171-TD LOW PROFILE GREASE INTERCEPTOR WITH ACCUMULATING CONE AND FLOW CONTROL TEE 197
Z1172 LARGE CAPACITY GREASE INTERCEPTOR 198
Z1172-UN LARGE CAPACITY GREASE INTERCEPTOR WITH USER NOTIFICATION SYSTEM 200
Z1173 EJECTO-MATIC GREASE INTERCEPTOR 201
Z1173-TD EJECTO-MATIC GREASE INTERCEPTOR WITH GREASE ACCUMULATING CONE AND IN-LINE SHUTOFF VALVE 202
Z1174 GREASE EATING BACTERIA DOSING UNIT AND SOLIDS INTERCEPTOR COMBINATION 203
Z1175 HAIR INTERCEPTOR 205
Z1176 HAIR INTERCEPTOR 205
Z1180 SOLIDS INTERCEPTOR 206
Z1181 SOLIDS INTERCEPTOR 206
Z1182 SIDE ACCESS SOLIDS INTERCEPTOR 207
Z1183-DF SOLIDS INTERCEPTOR WITH DISPOSABLE FILTER BAGS 208
Z1183-FC SOLIDS INTERCEPTOR WITH FLUSH COVER 209
Z1183 SOLIDS INTERCEPTOR 207
Z1184 BOTTOM ACCESS SOLIDS INTERCEPTOR 210
Z1185 LINT INTERCEPTOR 211
Z1186 OIL INTERCEPTOR 213
Z1186-ST OIL INTERCEPTOR WITH INTEGRAL STORAGE TANK 214
Z1187 SAND AND SEDIMENT INTERCEPTOR 215
Z1187-SI SAND INTERCEPTOR 216
Z1188 LARGE CAPACITY OIL INTERCEPTOR 217
Z1188-ST LARGE CAPACITY OIL INTERCEPTOR WITH INTEGRAL STORAGE TANK 218
Z1189 OIL/SEDIMENT INTERCEPTOR WITH HEAVY-DUTY GRATE 219
Z1194 OIL LEVEL SENSOR RETROFIT KIT 220
Z1196 OIL INTERCEPTOR WITH OIL LEVEL SENSOR 221
Z1198 LARGE CAPACITY OIL INTERCEPTOR WITH OIL LEVEL SENSOR 222
Z1198-ST LARGE CAPACITY OIL INTERCEPTOR WITH INTEGRAL STORAGE TANK AND OIL LEVEL FLOAT SENSOR 223
Z1200 CARRIER TOOLS AND ACCESSORIES 228
Z1201-N-XB EZCARRY® BARIATRIC CARRIER – 1000 LB ADJUSTABLE HORIZONTAL SIPHON JET – NO-HUB SERIES 234
Z1201-N-XH EZCARRY® EXTRA HEAVY-DUTY 750 LB ADJUSTABLE HORIZONTAL SIPHON JET – NO-HUB SERIES 235
Z1202-N-XB EZCARRY® BARIATRIC CARRIER – 1000 LB ADJUSTABLE VERTICAL SIPHON JET – NO-HUB SERIES 246
Z1202-N-XH EZCARRY® EXTRA HEAVY-DUTY 750 LB ADJUSTABLE VERTICAL SIPHON JET – NO-HUB SERIES 247
Z1203-H ADJUSTABLE HORIZONTAL SIPHON JET – HUB AND SPIGOT SERIES 252
Z1203-N ADJUSTABLE HORIZONTAL SIPHON JET – NO-HUB SERIES 250
Z1204-H ADJUSTABLE VERTICAL SIPHON JET – HUB AND SPIGOT SERIES 258
Z1204-N ADJUSTABLE VERTICAL SIPHON JET – NO-HUB SERIES 260
Z1207-N ADJUSTABLE HORIZONTAL HIGH ROUGH-IN SIPHON JET – NO-HUB 262
Z1208-H VERTICAL SIPHON JET WATER CLOSET SUPPORT SYSTEM – HUB AND SPIGOT 264
Z1208-N VERTICAL SIPHON JET WATER CLOSET SUPPORT SYSTEM – NO-HUB 263
Z1209-N VERTICAL OFFSET SIPHON JET WATER CLOSET SUPPORT SYSTEM – NO-HUB 265
Z1212 WALL CLOSET SUPPORT SYSTEM 267
Z1213-N 4" VERTICAL SIPHON JET WATER CLOSET SUPPORT SYSTEM – 2" OR 4" TOP VENT CLOSET FITTING ONLY (NO SUPPORT) 268
Z1216 90° DOUBLE NO-HUB SYSTEM FOR FLOOR MOUNTED BACK OUTLET WATER CLOSETS 269
Z1217 COUPLING TYPE SYSTEM – WALL URINAL/SERVICE SINK 270
Z1218 COUPLING TYPE SYSTEM – WALL URINAL/SERVICE SINK 271
Z1221 PLATE TYPE SYSTEM – WALL URINALS 272
Z1222 PLATE TYPE SYSTEM – WITH BEARING PLATE 272
Z1223 PLATE TYPE SYSTEM – TROUGH URINALS 273
Z1224 PLATE TYPE SYSTEM – LAVATORY WITH BACK 273
Z1225 PLATE TYPE SYSTEM – WATER COOLERS 274
Z1229 PLATE AND EXPOSED ARM – HEAVY SINKS 274
Z1231 CONCEALED ARM SYSTEM – WALL LAVATORIES 275
Z1236 EXPOSED ARM SYSTEM – WALL LAVATORIES/SINKS 276
Z1251 CONCEALED ARM SYSTEM – WALL SUPPORTED 277
Z1253 ADJUSTABLE CONCEALED ARM SYSTEM – WALL SUPPORTED 277
Z1255 EXPOSED ARM SYSTEM – WALL SUPPORTED 278
Z1256 EXPOSED ARM SYSTEM – WALL SUPPORTED 279
Z1257 EXPOSED ARM SYSTEM – WALL SUPPORTED 279
Z1258 EXPOSED ARM SYSTEM – WALL SUPPORTED 280
Z1259 PLATE SYSTEM – WALL SUPPORTED 281

ALPHANUMERIC INDEX

Z1280 WOOD STUD SUPPORTED WATER CLOSET CARRIER – NO-HUB **282**
Z1282 WOOD STUD SUPPORTED WATER CLOSET CARRIER – HUB AND SPIGOT **282**
Z1283 WOOD STUD SUPPORTED WATER CLOSET CARRIER – PLASTIC PIPE **283**
Z1284 CONCRETE FLOOR SUPPORTED WATER CLOSET CARRIER **283**
Z1285 WOOD STUD SUPPORTED WATER CLOSET CARRIER **284**
Z1300 ECOLOTROL WALL HYDRANT – ENCASED, NON-FREEZE, ANTI-SIPHON, AUTOMATIC DRAINING **287**
Z1305 WALL HYDRANT – ENCASED, NON-FREEZE **287**
Z1310 ECOLOTROL WALL HYDRANT – EXPOSED, NON-FREEZE, ANTI-SIPHON, AUTOMATIC DRAINING **288**
Z1315 WALL HYDRANT – EXPOSED, NON-FREEZE **288**
Z1320XL ECOLOTROL CERAMIC DISC WALL HYDRANT – ENCASED, NON-FREEZE, ANTI-SIPHON, AUTOMATIC DRAINING **289**
Z1321XL ECOLOTROL CERAMIC DISC WALL HYDRANT – EXPOSED, NON-FREEZE, ANTI-SIPHON, AUTOMATIC DRAINING **290**
Z1325 WALL HYDRANT – ENCASED, VARI-TEMP, NON-FREEZE **291**
Z1330XL ECOLOTROL CERAMIC DISC WALL HYDRANT – ENCASED, ANTI-SIPHON, AUTOMATIC DRAINING, MODERATE CLIMATE **292**
Z1333XL ECOLOTROL CERAMIC DISC WALL HYDRANT – EXPOSED, ANTI-SIPHON, AUTOMATIC DRAINING, MODERATE CLIMATE **293**
Z1335 WALL HYDRANT – ENCASED, MODERATE CLIMATE **293**
Z1350 NARROW WALL HYDRANT – ENCASED, MODERATE CLIMATE **294**
Z1360XL GROUND HYDRANT – ENCASED, FLUSH TYPE, NON-FREEZE **295**
Z1365 GROUND HYDRANT – ENCASED, FLUSH TYPE, NON-FREEZE **296**
Z1370 GROUND HYDRANT – ENCASED, HOSE STORAGE, NON-FREEZE **297**
Z1375 GROUND HYDRANT – ENCASED, MODERATE CLIMATE, INTERIOR USE **297**
Z1385 POST HYDRANT – EXPOSED HEAD, NON-FREEZE **298**
Z1388XL ROOF HYDRANT – EXPOSED HEAD, NON-FREEZE **298**
Z1390 POST HYDRANT – EXPOSED HEAD, NON-FREEZE **299**
Z1395XL YARD HYDRANT – EXPOSED HEAD, NON-FREEZE **300**
Z1397XL FLO-TROL YARD HYDRANT – EXPOSED HEAD, NON-FREEZE **300**
Z1400 EXTRA HEAVY-DUTY "LEVEL-TROL" ADJUSTABLE FLOOR CLEANOUT **305**
Z1400-K HEAVY-DUTY "LEVEL-TROL" ADJUSTABLE FLOOR CLEANOUT WITH ANCHOR FLANGE **306**
Z1402 HEAVY-DUTY NON-ADJUSTABLE FLOOR CLEANOUT **307**
Z1404 HEAVY-DUTY FLOOR ACCESS HOUSING **308**
Z1406 HEAVY-DUTY ADJUSTABLE SPIGOT CLEANOUT **308**
Z1440 CLEANOUT FERRULE WITH PLUG **309**
Z1445 CLEANOUT TEE **309**
Z1449 CLEANOUT FERRULE WITH PLUG **310**
Z1454 ADJUSTABLE FLOOR CLEANOUT WITH FLASHING FLANGE **310**
Z1456 DECK CLEANOUT **311**
Z1457 FLOOR ACCESS COVER **311**
Z1460 SQUARE WALL ACCESS PANEL **312**
Z1461 SQUARE HINGED ACCESS PANEL **312**
Z1462 SECURED WALL ACCESS PANEL **313**
Z1463 ROUND SCORIATED ACCESS COVER **313**
Z1464 WATER SUPPLY CONTROL BOX ASSEMBLY **314**
Z1468 ACCESS COVER AND PLUG **314**
Z1469 ROUND ACCESS COVER **315**
Z1470 BRONZE CLEANOUT PLUG **315**
Z1471 AIR INLET **316**
Z1474 HEAVY-DUTY CLEANOUT HOUSING **316**
Z1602 ADJUSTABLE ROUND MEDIUM-DUTY NICKEL BRONZE CLEANOUT **317**
Z1612 ADJUSTABLE ROUND HEAVY-DUTY NICKEL BRONZE CLEANOUT **317**
Z1615 CAST IRON LINE OR FLOOR CLEANOUT - NON-ADJUSTABLE **318**
Z1616 CAST IRON LINE OR FLOOR CLEANOUT - NON-ADJUSTABLE **318**
Z1666-1 URINAL CLEANOUT **319**
Z1666 SEAL OR TEST PLUG **319**
Z1700 SHOKTROLS **322**
Z1712 ACCUMUTROL **322**
Z1715 15" [381 MM] DIAMETER ROOF DRAIN **325**
Z1717 SCUPPER DRAIN **325**
Z1720 4" X 8" [102 MM X 203 MM] OPEN SIGHT DRIP DRAIN **326**
Z1721 6" X 12" [152 MM X 305 MM] OPEN SIGHT DRIP DRAIN **326**
Z1724 ROUND FUNNEL **327**
Z1725 OVAL FUNNEL **327**
Z1726 ADJUSTABLE MEDIUM DUTY FLOOR DRAIN WITH ROUND TOP **328**
Z1727 ADJUSTABLE MEDIUM DUTY FLOOR DRAIN WITH SQUARE TOP **329**
Z1730 9" [229 MM] DIAMETER HEAVY-DUTY SHALLOW TYPE FLOOR DRAIN **330**
Z1731 9" [229 MM] DIAMETER HEAVY-DUTY MEDIUM DEPTH FLOOR DRAIN **330**
Z1732 9-5/8" [244 MM] DIAMETER HEAVY-DUTY ADJUSTABLE FLOOR DRAIN **331**
Z1735 12" [305 MM] DIAMETER HEAVY-DUTY FLOOR DRAIN **331**
Z1736 12" [305 MM] DIAMETER EXTRA HEAVY-DUTY FLOOR DRAIN **332**
Z1737 15" [381 MM] DIAMETER EXTRA HEAVY-DUTY FLOOR DRAIN **332**
Z1739 PIT DRAIN **333**
Z1740 BACKWATER VALVE **333**
Z1745 FLOOR CLEANOUT WITH O-RING SEAL PLUG **334**
Z1749 12" X 12" [305 MM X 305 MM] SANI-FLOR RECEPTOR WITH 4" [102 MM] SUMP DEPTH **335**
Z1750 12" X 12" [305 MM X 305 MM] SANI-FLOR RECEPTOR WITH 6" [152 MM] SUMP DEPTH **336**
Z1751 12" X 12" [305 MM X 305 MM] SANI-FLOR RECEPTOR WITH 8" [203 MM] SUMP DEPTH **337**
Z1752 12" X 12" [305 MM X 305 MM] SANI-FLOR RECEPTOR WITH 10" [254 MM] SUMP DEPTH **338**
Z1755 13-3/8" [340 MM] SQUARE SANI-FLOR RECEPTOR 6" [152 MM] SUMP WITH ADJUSTABLE CLAMP FRAME **339**
Z1761 24-5/16" [618 MM] SQUARE KETTLE DRAIN WITH 8" [203 MM] SUMP DEPTH **339**
Z1762 25" X 15-1/2" [635 MM X 394 MM] KETTLE DRAIN **340**
Z1763 37-9/16" X 22-7/8" [954 MM X 581 MM] KETTLE DRAIN **341**
Z1900 12" X 12" [305 MM X 305 MM] A.R.E. SANI-FLOR RECEPTOR WITH 6" [152 MM] SUMP DEPTH **345**
Z1901 12" X 12" [305 MM X 305 MM] A.R.E. SANI-FLOR RECEPTOR WITH 8" [203 MM] SUMP DEPTH **347**
Z1902 12" X 12" [305 MM X 305 MM] A.R.E. SANI-FLOR RECEPTOR WITH 10" [254 MM] SUMP DEPTH **349**
Z1910 8" X 8" [203 MM X 203 MM] A.R.E. SANI-FLOR RECEPTOR WITH 6" [152 MM] SUMP DEPTH **351**
Z1920 16" X 16" [406 MM X 406 MM] A.R.C. SANI-FLOR RECEPTOR WITH 7" [178 MM] SUMP DEPTH **353**
Z1926 16" X 16" [406 MM X 406 MM] A.R.C. SANI-FLOR RECEPTOR WITH 12" [305 MM] SUMP DEPTH **354**
Z1930 8" X 4" [203 MM X 102 MM] A.R.C. SANI-FLOR RECEPTOR WITH 4" [102 MM] SUMP DEPTH **355**
Z1940 12" X 6" [305 MM X 152 MM] A.R.C. SANI-FLOR RECEPTOR WITH 8" [203 MM] SUMP DEPTH **356**
Z1950 12" [305 MM] DIAMETER A.R.E. SANI-FLOR RECEPTOR WITH 8" [203 MM] SUMP DEPTH **357**
Z1960 8" [203 MM] DIAMETER A.R.E. SANI-FLOR RECEPTOR WITH 6" [152 MM] SUMP DEPTH **358**
Z1970 9" [229 MM] DIAMETER SHALLOW A.R.C. SANI-FLOR RECEPTOR WITH 3" [76 MM] SUMP DEPTH **359**
Z1982 12" X 12" [305 MM] STAINLESS STEEL SANI-FLOR CAN WASH DRAIN WITH 8" [203 MM] SUMP DEPTH **360**
Z1995 24" X 16" [610 MM X 406 MM] A.R.C. SANI-FLOR RECEPTOR WITH 17" [432 MM] SUMP DEPTH **360**
ZCF121 12" [305 MM] DIAMETER ROOF DRAIN **38**
ZCF130 8" [203 MM] CONTROL ROOF DRAIN **42**
ZF110-R 15" [381 MM] GREEN ROOF BOX - PERFORATED SCREEN ASSEMBLY **35**

ALPHANUMERIC INDEX

ZF110-S GREEN ROOF BOX - PERFORATED SCREEN ASSEMBLY, REMOVABLE COVER **36**

ZF199 CHAMELEON DOWNSPOUT NOZZLE WITH FLAPPER **59**

ZF799 HEAVY-DUTY CATCH BASIN DRAIN **170**

ZF7000 FLOW SENSOR **60**

ZN211-BE ROUND FUNNEL NICKEL BRONZE FLOOR DRAIN **67**

ZN211-B FLOOR AND SHOWER DRAIN WITH ROUND NICKEL BRONZE STRAINER **67**

ZN211-BF OVAL OPEN THROAT FUNNEL NICKEL BRONZE FLOOR DRAIN **68**

ZN211-Y FLOOR AND SHOWER DRAIN WITH SQUARE NICKEL BRONZE STRAINER **69**

ZN400 "TYPE BF" ROUND NICKEL BRONZE STRAINER WITH OVAL FUNNEL - OPEN THROAT **79**

ZN400 "TYPE B" ROUND STRAINER WITH HEEL-PROOF SQUARE OPENINGS **77**

ZN400 "TYPE R" CIRCULAR ADJUSTABLE STRAINER WITH SURFACE CLAMP RING AND GRATE **84**

ZN415-BE FUNNEL FLOOR DRAIN **101**

ZN415-B FLOOR AND SHOWER DRAIN WITH ROUND STRAINER **100**

ZN415-BF OVAL FUNNEL FLOOR DRAIN **102**

ZN415-R FLOOR DRAIN WITH CIRCULAR ADJUSTABLE STRAINER WITH SURFACE CLAMP RING AND GRATE **115**

ZN415-Y FLOOR DRAIN WITH NICKEL BRONZE SQUARE STRAINER **121**

ZN1209-N VERTICAL OFFSET SIPHON JET – NO-HUB NARROW WALL SYSTEM **266**

ZS400 "TYPE B" ROUND STAINLESS STEEL STRAINER **78**

ZS400 "TYPE BS" ROUND STRAINER WITH SLOTTED OPENINGS **78**

ZS400 "TYPE SS" SQUARE STRAINER **85**

ZS415 BODY ASSEMBLY WITH "TYPE BS" STRAINER **103**

ZS415 BODY ASSEMBLY WITH "TYPE SS" STRAINER **117**

ZS1170 GREASE INTERCEPTOR STAINLESS STEEL **195**

ZSS400 "TYPE Y" SQUARE STAINLESS STEEL STRAINER **88**

ZURN BARIATRIC PROVIDES SUPERIOR PERFORMANCE **17**

ZX211-Y FLOOR DRAIN WITH SQUARE HEAVY-DUTY CAST IRON STRAINER **69**

ZX400 "TYPE A" HEAVY-DUTY CAST IRON STRAINER **77**

ZX415-A FLOOR DRAIN WITH HEAVY-DUTY ROUND STRAINER **98**

ZXN211-H FLOOR DRAIN WITH HEAVY DUTY SQUARE STRAINER **68**

ZXN400 "TYPE A" HEAVY-DUTY NICKEL BRONZE ROUND STRAINER **76**

ZXN400 "TYPE H" HEAVY-DUTY SQUARE ADJUSTABLE STRAINER **81**

ZXN400 "TYPE Y" HEAVY-DUTY SQUARE ADJUSTABLE STRAINER **88**

ZXN415-A FLOOR DRAIN WITH HEAVY-DUTY ROUND STRAINER **99**

ZXN415-H FLOOR DRAIN WITH HEAVY-DUTY SQUARE GRATE **108**

ZX(N)415-Y8 FLOOR DRAIN WITH HEAVY-DUTY SQUARE ADJUSTABLE CAST IRON STRAINER **122**

GENERAL TERMS AND CONDITIONS

PRICE AND TERMS OF PAYMENT

Terms are net, payable 30 days from date of invoice. Zurn Credit must be identified of potential pricing errors within 30 days of invoice date. Shortage claims must be reported within 10 working days of receiving product to your local Zurn Rep or Zurn Customer Care. All pricing in CAD dollars. The Buyer shall pay all sales, consumers, or other applicable taxes. A 1-1/2% monthly (18% annual) service charge will be added to the outstanding balance of all past due invoices.

Minimum invoice $100.00. Zurn Industries, LLC ("Zurn") reserves the right to apply a minimum order charge in order to meet the $100.00 minimum invoice requirement. All orders are subject to credit approval by the Zurn Credit Department prior to the acceptance of an order. Orders may be refused, delivery may be withheld, or shipment stopped in transit without any liability on Zurn's part at Zurn's sole discretion based upon Buyer's credit worthiness as determined by Zurn.

FREIGHT

Zurn Canada is pleased to provide an industry-leading $3,500 combined prepaid freight amount, not including Zurn Green Turtle product sales.

All sales are F.O.B. seller's location. Routing of shipment shall be determined at the sole discretion of Zurn. Shipping dates are estimates and time of delivery shall not be of the essence of this sale contract. Under no circumstances will the Seller have any responsibility on account of any delays in manufacture, transportation, or otherwise.

NOTE: Any product dimension larger than 92" or any single item weighing more than 3,500 lb, shall be defined as an oversized and/or overweight product and Zurn's standard FFA terms may not apply. Please contact our customer service department for guidance on potential additional shipping charges.

These charges and restrictions apply in addition to Zurn standard terms and conditions for sale unless otherwise agreed upon by the parties.

LIMITED WARRANTY

Zurn goods sold hereunder are warranted to be free from defects in material and factory workmanship for the period of time from the date of purchase: AquaVantage® Flush Valves, AquaFlush® Flush Valves, Commercial Fixtures, Faucets, Showers, and Tubular Brass: three years; Chemical Drainage, Trench Drainage, Commercial Drainage, Specification Drainage, Zurn Wilkins, and Flush Valve and Tubular Brass decorative finishes: one year, PHIX® Cartridge ten years. Where permitted by law, **THE IMPLIED WARRANTY OF MERCHANTABILITY IS LIMITED TO THE ABOVE IDENTIFIED PERIOD OF TIME AND SHALL BE LIMITED SOLELY TO THE REPLACEMENT OF THE DEFECTIVE GOODS.** A damaged/broken test cock or ball valve is not considered defective. Please contact Zurn Customer Care for assistance.

Zurn will replace goods at no cost that prove defective provided Zurn is notified in writing of such defect and the goods are returned prepaid at the specified Zurn location with evidence that they have been properly maintained and used in accordance with instructions. **ZURN SHALL NOT BE RESPONSIBLE FOR ANY LABOR CHARGES OR ANY LOSS, INJURY, OR DAMAGES WHATSOEVER, INCLUDING, BUT NOT LIMITED TO, INCIDENTAL OR CONSEQUENTIAL DAMAGES.** The sole and exclusive remedy shall be limited to the replacement of the defective goods. Before installation and use, the purchaser shall determine the suitability of the product for his intended use and the purchaser assumes all risk and liability whatever in the connection therewith. All weights stated in Zurn catalogs and lists are approximate and are not guaranteed.

RETURNED GOODS

Standard cataloged material may be returned only with the written permission of Zurn. Returned goods are subject to a 25% restocking charge of total saleable material returned, plus the cost of reconditioning, if necessary, to make material sellable. Transportation charges are the responsibility of the Buyer. The value of the return must total at least $100.00 to qualify for credit allowance. No credit will be allowed for parts unless originally ordered and invoiced as parts. No credit will be allowed for discontinued or made-to-order items. Items that have been specially made are not subject to return or cancellation except by special negotiation. Material must be returned within one year of invoice date for credit to be issued. Commercial Drainage and Specification Drainage galvanized material will be credited at value of Dura-Coated cast iron, and chrome plated at value of bronze. Zurn Wilkins damaged/broken test cocks or ball valves are not considered defective.

ILLUSTRATIONS OF TYPICAL INSTALLATIONS

The typical installations for various products found in each product section are intended to illustrate the products and potential options for the use of these products. Under no circumstances are they to be construed as recommended installation procedures. Consult local codes and project specifications for proper installation instructions.

SHORTAGE/DAMAGE CLAIMS

Notification of material shortages or incorrect filling of orders must be made to Zurn within 10 days of receipt. No claims over three months old will be honored. Buyer agrees to make all complaints for damage in transit or "short count" directly to the carrier; before the contents are unloaded have the carrier agent's acknowledgment of such damage noted on the bill of lading and to present to the carrier its agent's acknowledgment of such damaged material with formal claim covering said damage.

GENERAL

Zurn reserves the right to make changes in design or equipment of any item or product without incurring any obligation on previously sold items, and to discontinue items at any time, without notice. Possession of this Catalog or other sales literature is not to be construed as an offer to sell. All orders are subject to acceptance by Zurn. Catalog printed in U.S.A.

Zurn flush valves are designed to comply with Army Corp of Engineers and Naval guide specifications, Military Specification MIL.V.29193 and Federal Specification WWP541.

Zurn flush valves comply with the following standards: ASME A112.18.1/CSA B125.1, A112.19.5, A112.19.2, A112.19.6, ASSE 1037 and 101 are listed by the following agencies: Canadian Standards, IAPMO/UPC/CUPC, and CSA 125.3. Zurn flush valves are manufactured from dezincification resistant alloys. For additional compliances, contact Zurn Industries, LLC, Commercial Brass Operation, or 1-800-997-3876.

Zurn is not responsible for typographical errors. The contents of this guide are subject to revision without notice.

© 2021 Zurn Industries, LLC Items in this guide may be covered by U.S. and foreign Patents and Patents Pending. Registered Trademarks.

Zurn Industries, LLC Specification Drainage Operation
1801 Pittsburgh Avenue
Erie, PA 16502, 855.663.9876

In Canada
Zurn Industries Limited
7900 Goreway Drive, Unit 10
Brampton, ON L6T 5W6, 877.892.5216

ZURN.COM **US** 1.855.ONE.ZURN **CANADA** 1.877.892.5216

Form No. 444-002, 9/21