LABORATORY FAUCET - DOUBLE

Z826V3-XL

TAG _____

Engineering Specifications: Zurn AquaSpec® Z826V3-XL
Polished chrome-plated double laboratory faucet with integral shank, quarter turn ceramic disc cartridges and a 8" [203mm] centerline rigid gooseneck spout with vacuum breaker. Unit is furnished with a 2.2 GPM [8.3 L] pressure compensating aerator (complying with ANSI A112.18.1 Standard for flow), 2" [51mm] vandal-resistant color-coded metal dome lever handles, mounting hardware and stainless steel flex connection hoses.

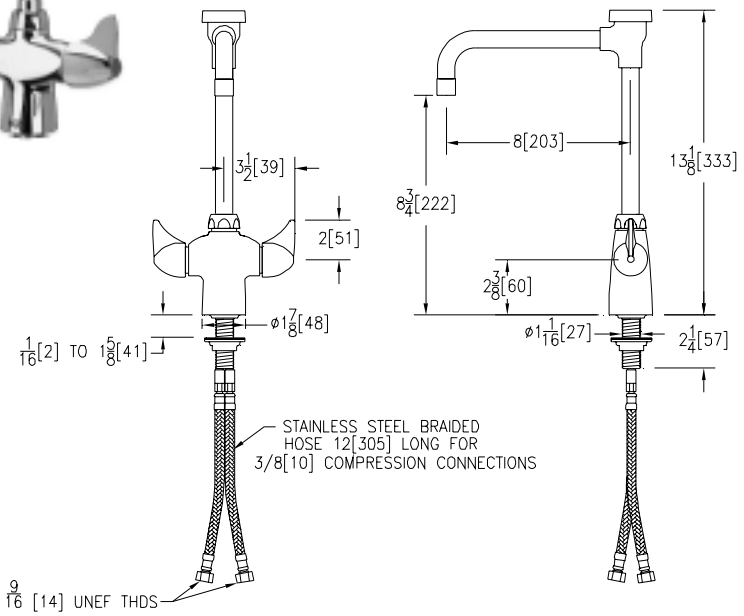

Zurn Lead Compliant* "XL" products are a line of durable, high quality brass faucets and fixtures that are designed and manufactured to comply with state laws and local codes that mandate lead content levels. Zurn "XL" products are manufactured with *not more than 0.25% lead content when used with respect to wetted surfaces of pipes and pipe fittings, plumbing fitting and fixtures: California Health & Safety Code § 116875; Vermont 9 VCA § 2470h

ADA DESIGNED

Note: All dimensions are for reference only. Do not use for pre-plumbing.

OPTIONAL ACCESSORIES

Suffix	Description
___-AR	Anti-Rotation Pins
___-CST	Copper Supply Tubes
___-FC	2.0 GPM [7.6 L] Flow Control in Base of Spout
___-G	1-1/4" [32mm] Grid Strainer Drain
___-GH	1-1/4" [32mm] Offset Handicap Grid Strainer
___-HCT	Hot/Cold Text Indexes
___-MY	Mixing Yoke Assembly Instead of Braided Hoses
___-MYCS	Mixing Yolk with Check Stop
___-PT	1-1/4" [32mm] Cast Brass P-Trap with a 7-1/2" [191mm] Long 17-Gauge Wall Bend
___-2F	2.2 GPM [8.3 L] Vandal-Resistant Pressure Compensating Female Aerator
___-3F	0.5 GPM [1.9 L] Vandal-Resistant Pressure Compensating Female Spray Outlet
___-4F	2.2 GPM [8.3 L] Vandal-Resistant Pressure Compensating Female Laminar Flow Outlet
___-7F	1.0 GPM [3.8L] Pressure Compensating Female Spray Outlet
___-16F	1.0 GPM [3.8L] Vandal-Resistant Pressure Compensating Female Spray Outlet
___-17F	1.5 GPM [5.7L] Vandal-Resistant Pressure Compensating Female Aerator
___-18F	1.5 GPM [5.7L] Vandal-Resistant Pressure Compensating Female Laminar Flow Outlet
___-18FH	18" [457mm] S.S. Braided Flex Hoses
___-19F	1.5 GPM [5.7 L] Anti-Microbial Pressure Compensating Female Laminar Flow Outlet
___-21F	1.0 GPM [3.8L] Pressure Compensating Female Laminar Flow Outlet
___-22F	1.0 GPM [3.8L] Pressure Compensating Vandal-Resistant Female Laminar Flow Outlet
___-23F	1.5 GPM [5.7L] Pressure Compensating Female Aerator

ZURN INDUSTRIES, LLC ♦ COMMERCIAL BRASS OPERATION ♦ 2640 SOUTH WORK STREET ♦ FALCONER NY 14733
Phone: 1-800-997-3876 ♦ Fax: 1-919-775-3541 ♦ www.zurn.com
In Canada: ZURN INDUSTRIES LIMITED ♦ 3544 Nashua Drive ♦ Mississauga, Ontario L4V1L2 ♦ Phone: 905/405-8272 Fax: 905/405-1292

AquaSpec® is a registered trademark of Zurn Industries, LLC
©2010 Zurn Industries, LLC

Rev. Date: 8/16/10 C.N. No. 126778
Dwg. No. 301888 Product No. Z826V3-XL