SINK FAUCET
Z842M3

TAG _____

Engineering Specifications: Zurn AquaSpec® Z842M3
Polished chrome-plated cast brass 8" [203mm] sink faucet with quarter turn ceramic disc cartridges, 3/8" [10mm] short swivel inlets providing adjustable centers from 7-1/4" [184mm] to 8-3/8" [213mm] and a 6" [152mm] centerline cast brass vacuum breaker spout with a 3/4" hose threaded outlet, pail hook and wall brace. Unit is furnished with 2" [51mm] vandal-resistant color-coded metal dome lever handles. (Note: Atmoshperic vacuum breaker not intended for continuous pressure applications.)

ADA DESIGNED

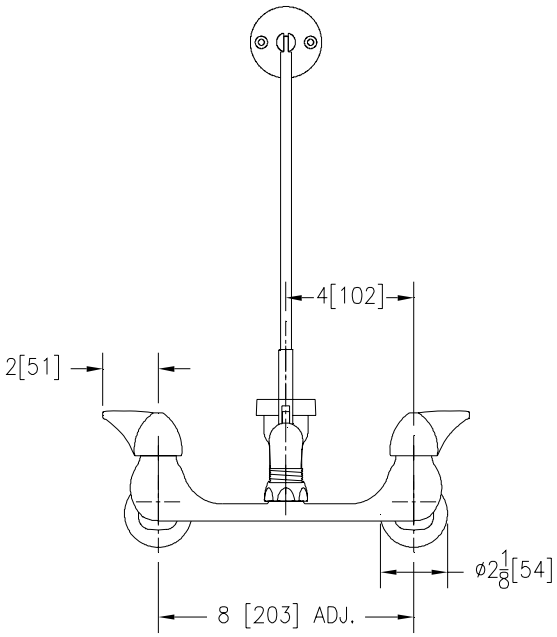

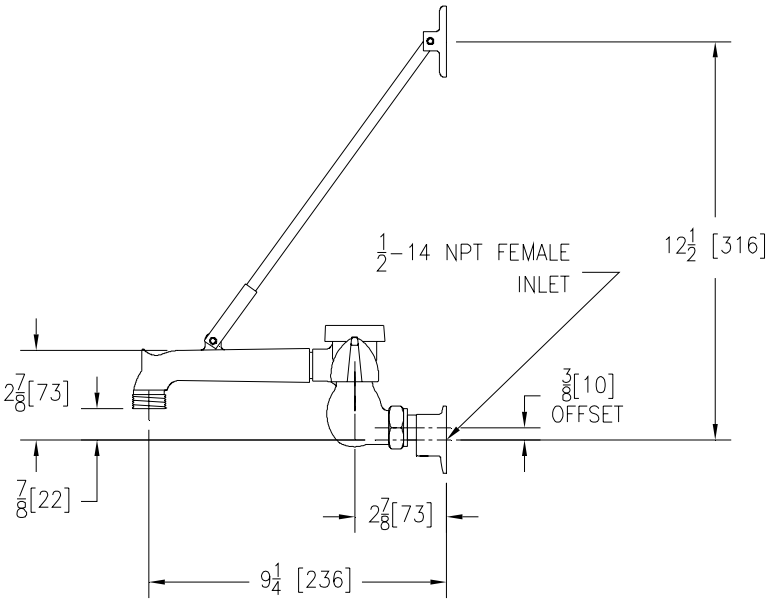

Note: All dimensions are for reference only. Do not use for pre-plumbing.

OPTIONAL ACCESSORIES

Suffix	Description
___-HCT	Hot/Cold Text Indexes
___-LSI	2-1/2" [64mm] Long Swivel Inlets with Integral Stops
___-RC	Rough Chrome Plated
___-WHK	Wall Hook
___-5H	5' [152cm] Vinyl Hose

ZURN INDUSTRIES, LLC ♦ COMMERCIAL BRASS OPERATION ♦ 2640 SOUTH WORK STREET ♦ FALCONER NY 14733
Phone: 1-800-997-3876 ♦ Fax: 1-919-775-3541 ♦ www.zurn.com
In Canada: ZURN INDUSTRIES LIMITED ♦ 3544 Nashua Drive ♦ Mississauga, Ontario L4V1L2 ♦ Phone: 905/405-8272 Fax: 905/405-1292

AquaSpec® is a registered trademark of Zurn Industries, LLC
©2011 Zurn Industries, LLC

Rev. F Date: 10/20/11 C.N. No. 128280
Dwg. No. 65322 Product No. Z842M3