CLINICAL SERVICE SINK FAUCET

Z842D1-LSI-LVB-PE-2XT

TAG _____

Engineering Specification: Zurn AquaSpec® Z842D1-LSI-LVB-PE-2XT
Polished chrome-plated cast brass 8" [203mm] clinical service sink faucet with quarter-turn ceramic disc cartridges, 2 1/2" [64mm] long swivel inlets (with integral stops) providing adjustable centers from 3" [76mm] to 13" [330mm] and a 7 1/8" [181mm] centerline cast brass, plain end spout with a pail hook and a forked bottom brace. Unit is furnished with 2 1/2" [64mm] vandal-resistant color-coded metal lever handles.

ADA DESIGNED

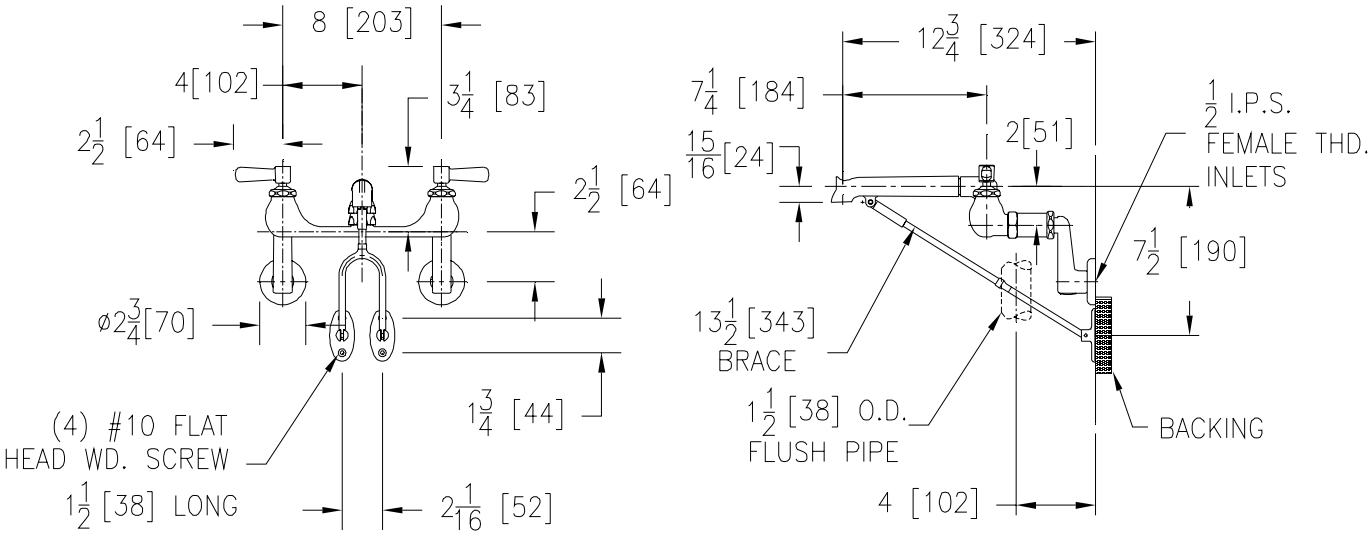

Note: All dimensions are for reference only. Do not use for pre-plumbing.

OPTIONAL ACCESSORIES

Suffix	Description
__ -CS	Check Stops
__ -HCT	Hot/Cold Text Indexes
__ -RC	Rough Chrome Plated

ZURN INDUSTRIES, LLC ♦ COMMERCIAL BRASS OPERATION ♦ 2640 SOUTH WORK STREET ♦ FALCONER NY 14733
Phone: 1-716-665-1132 ♦ Fax: 1-716-665-1135 ♦ World Wide Web: www.zurn.com
In Canada: ZURN INDUSTRIES LIMITED ♦ 3544 Nashua Drive ♦ Mississauga, Ontario L4V1L2 ♦ Phone: 905/405-8272 Fax: 905/405-1292

AquaSpec® is a registered trademark of Zurn Industries, LLC
©2008 Zurn Industries, LLC

Rev. G Date: 2/20/08 C.N. No. 107111
Dwg. No. 92659 Product No. Z842D1-LSI-LVB-PE-2XT